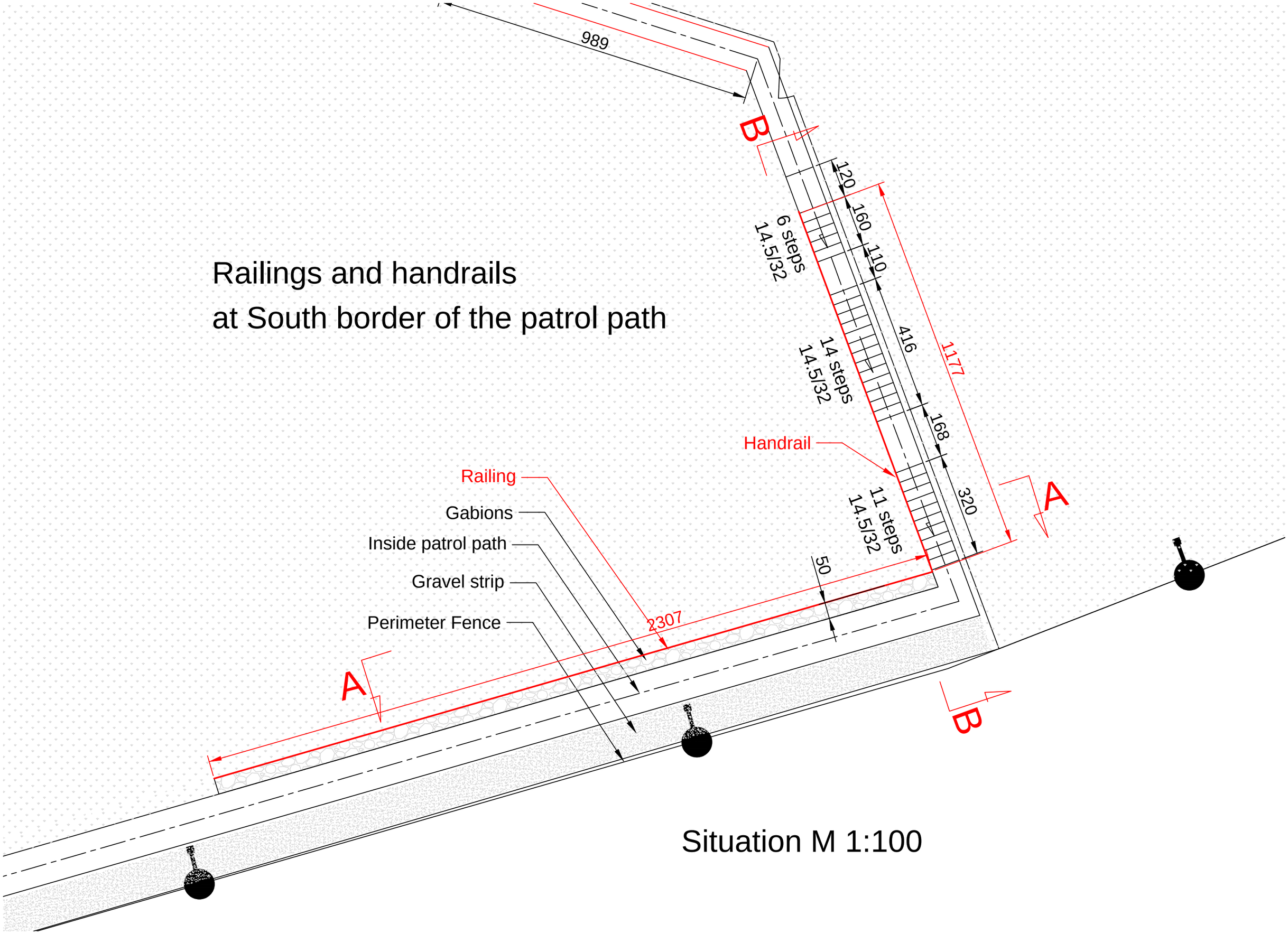
Railings and handrails
at South border of the patrol path
989
B
120
160
110
6 steps
14.5/32
416
1177
14 steps
14.5/32
168
Handrail
320
A
11 steps
14.5/32
Railing
Gabions
Inside patrol path
Gravel strip
Perimeter Fence
50
2307
A
B
Situation M 1:100

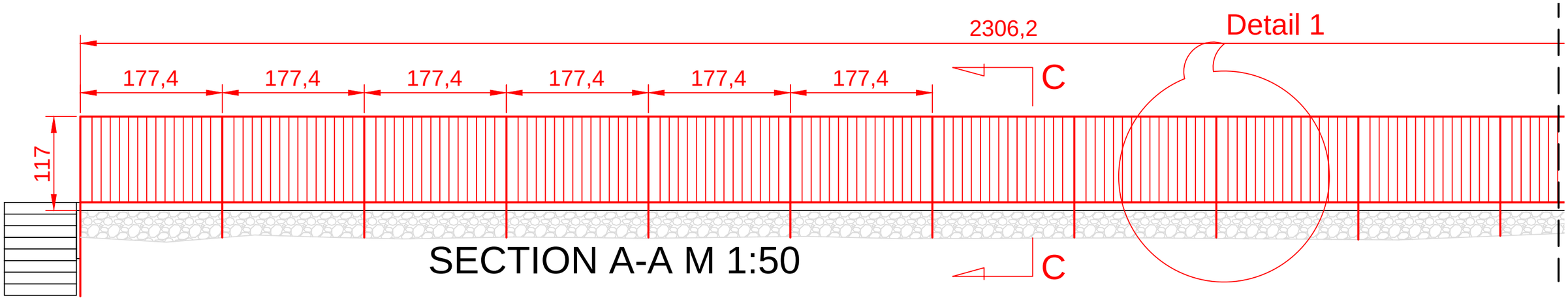

SECTION A-A M 1:50

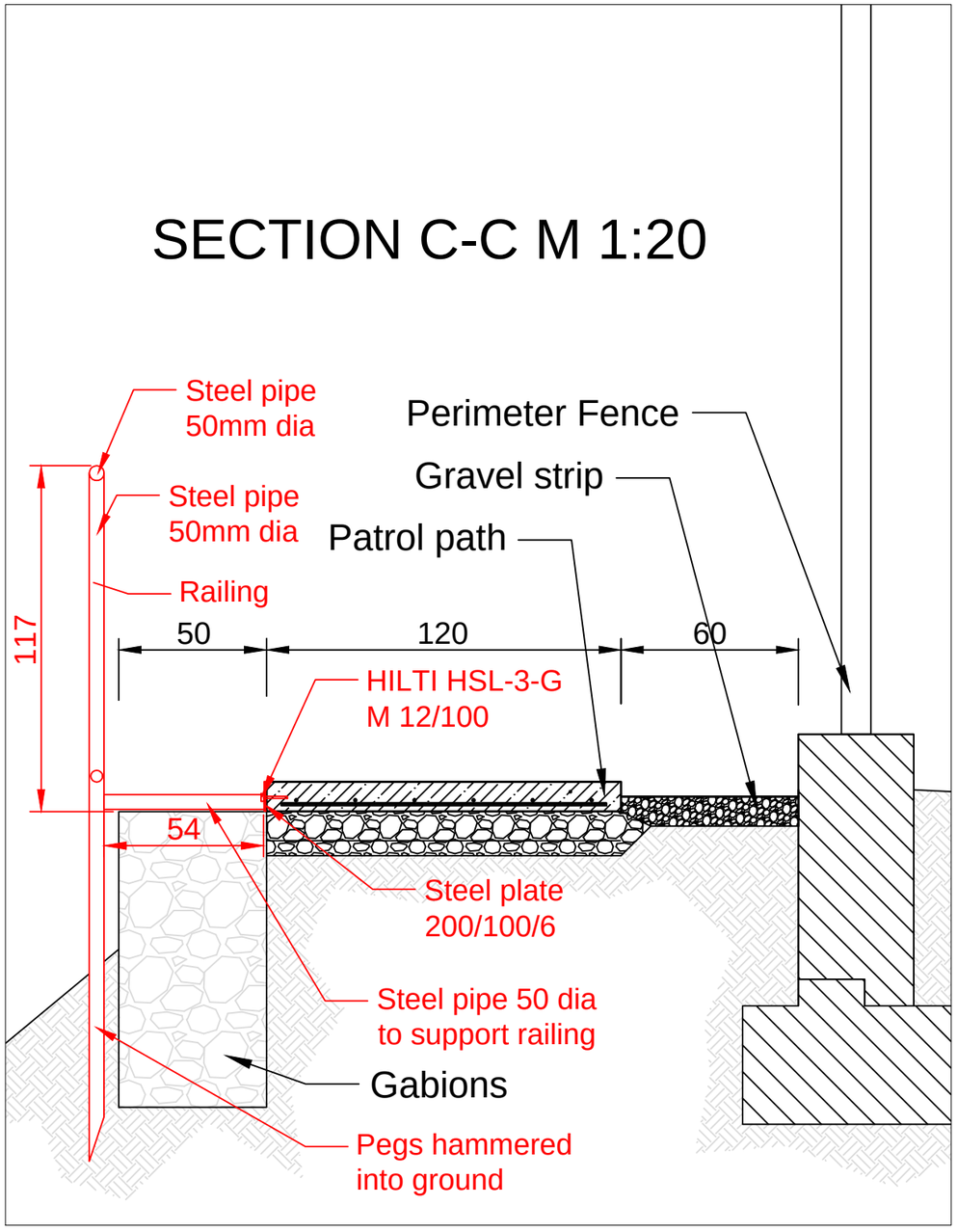

SECTION C-C M 1:20

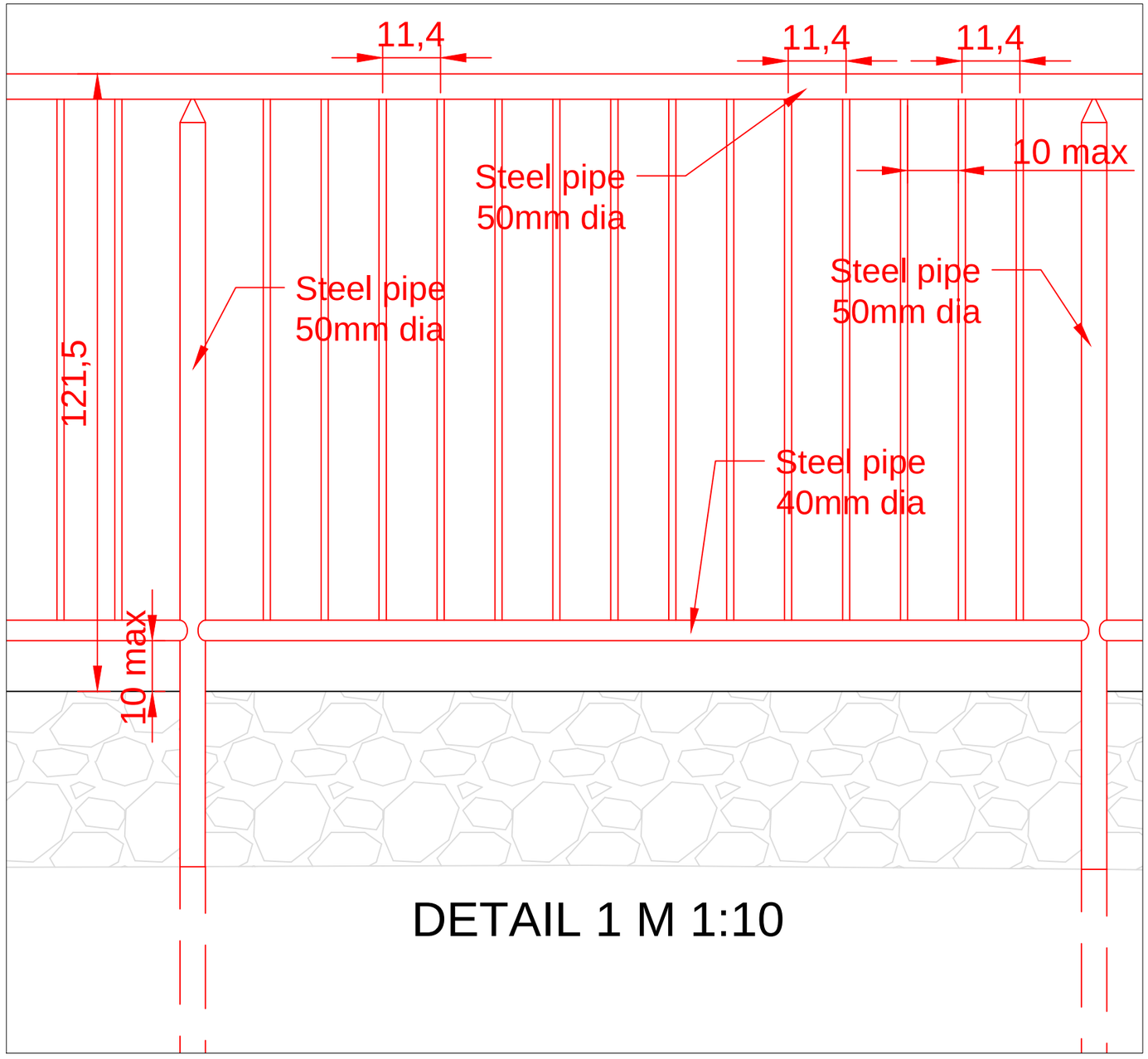

DETAIL 1 M 1:10

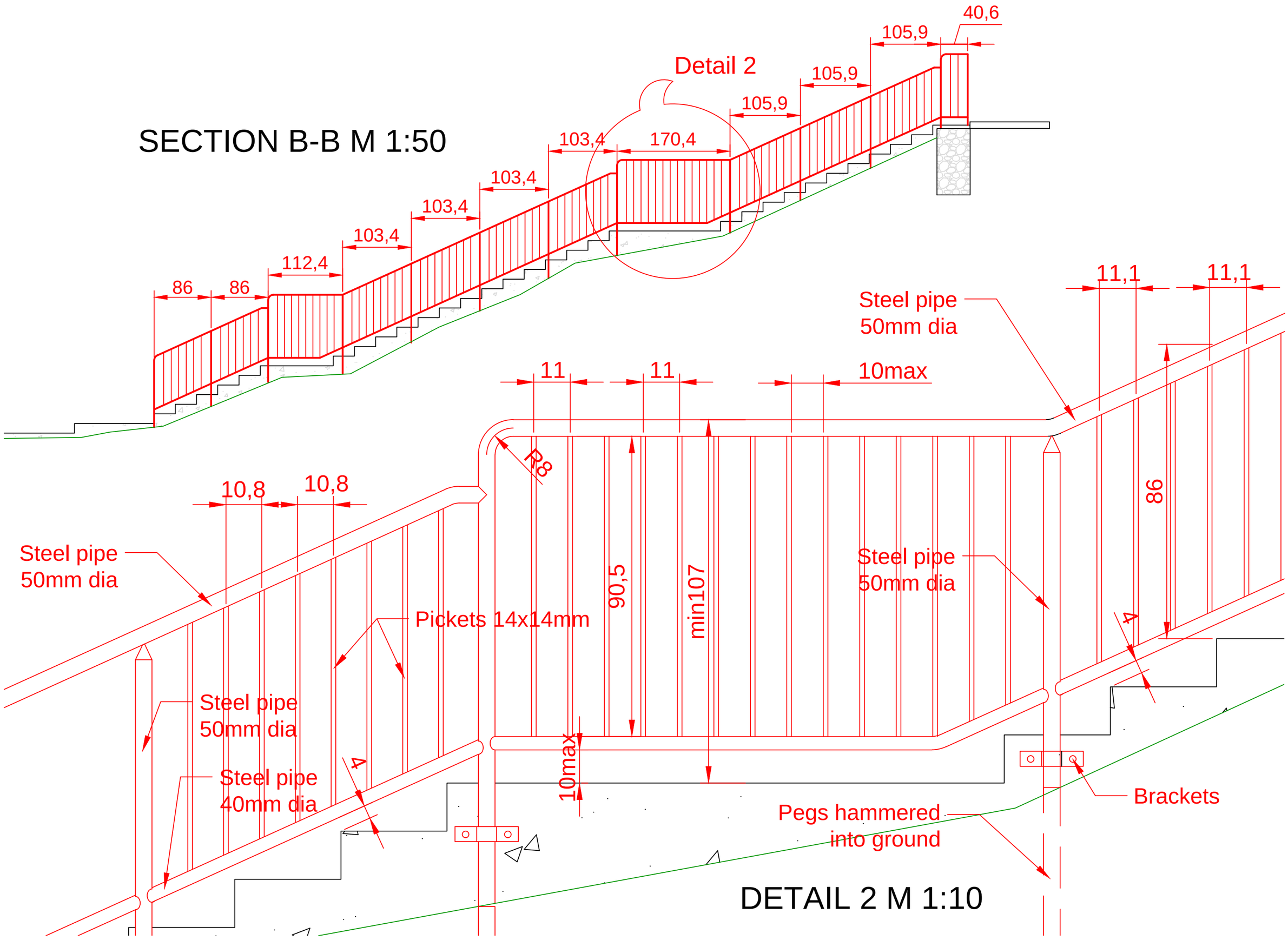
SECTION B-B M 1:50
Detail 2
86
86
112,4
103,4
103,4
103,4
103,4
170,4
105,9
105,9
105,9
40,6
DETAIL 2 M 1:10
Steel pipe
50mm dia
10,8
10,8
Pickets 14x14mm
Steel pipe
50mm dia
Steel pipe
40mm dia
4
11
11
10max
R8
90,5
min107
10max
Steel pipe
50mm dia
Steel pipe
50mm dia
11,1
11,1
86
4
Brackets
Pegs hammered
into ground

Railings at South_west part of the patrol path

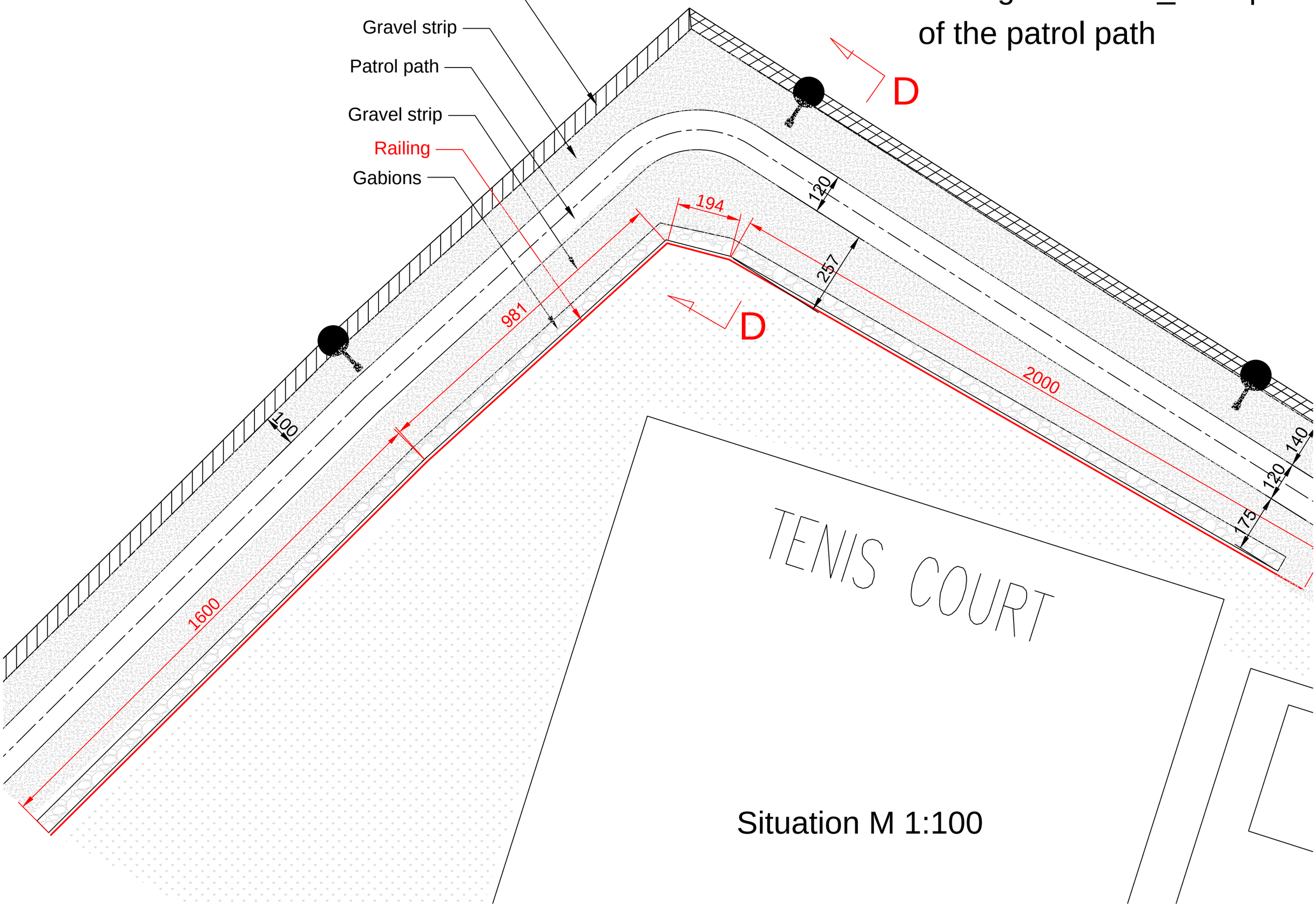

Situation M 1:100

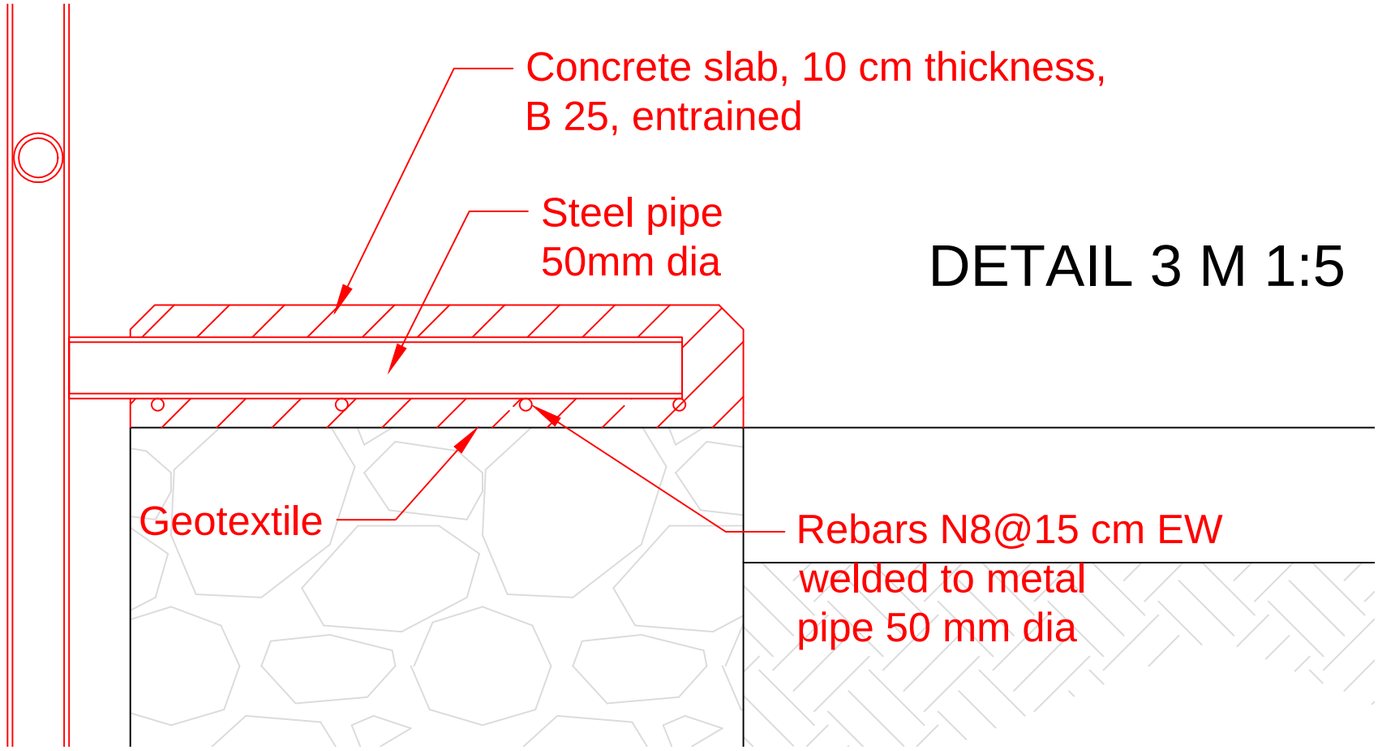

DETAIL 3 M 1:5

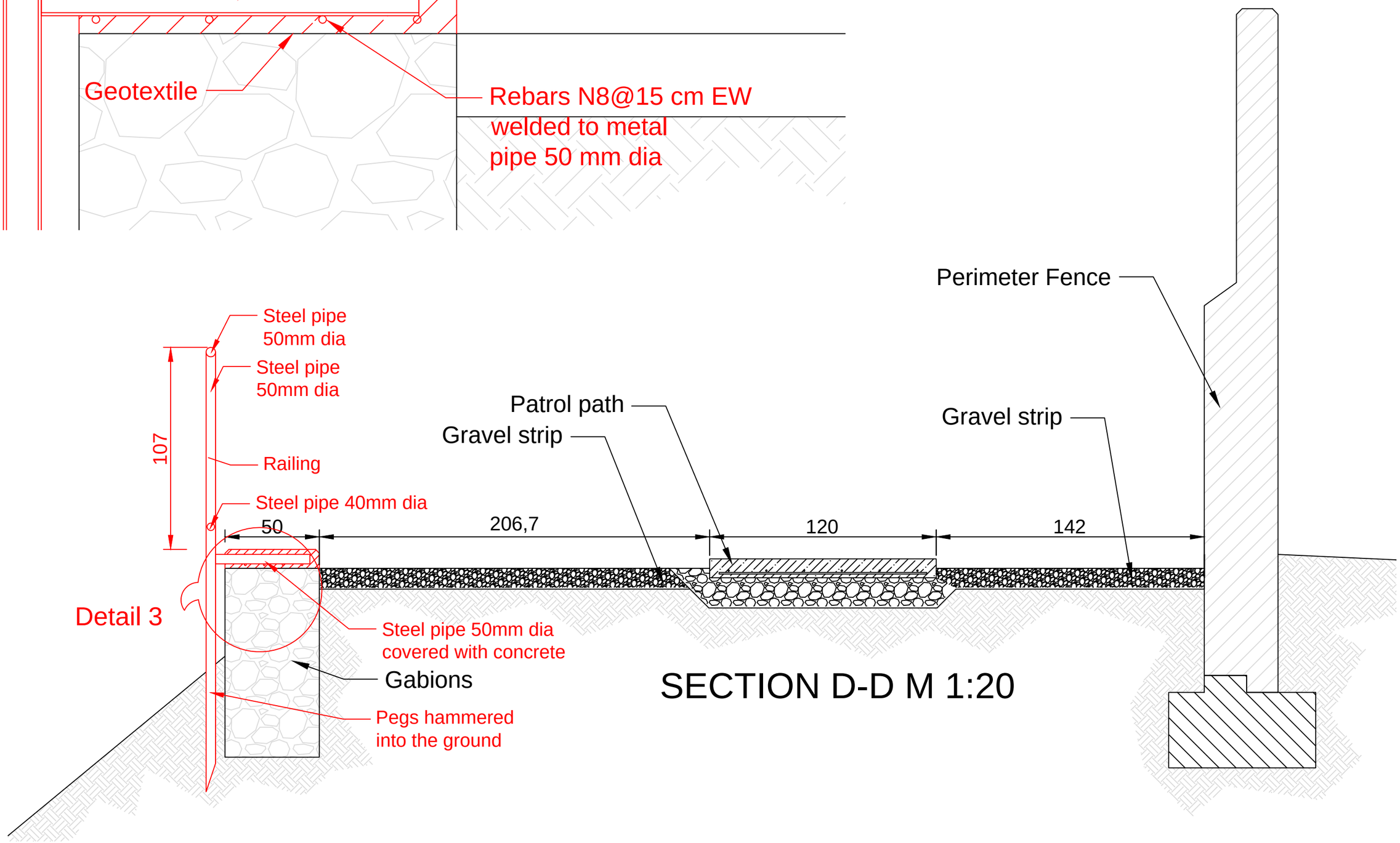

SECTION D-D M 1:20