SECTION A

COVER PAGE - SF-1442

SECTION B - SUPPLIES OR SERVICES AND PRICES/COSTS

B.1 CONTRACT PRICE

The Contractor shall complete all work (including furnishing all labor, material, equipment and services) required under this contract for the following firm fixed price and within the time specified. This price shall include all labor, materials, overhead (including insurance required by FAR 52.228-4, Workers' Compensation and War-Hazard Insurance, which shall be a direct reimbursement), and profit.

_____ Total Price

B.2 VALUE ADDED TAX

VALUE ADDED TAX (VAT). The Government will not reimburse the Contractor for VAT under this contract. The Contractor shall not include a line for VAT on Invoices as the U.S. Embassy has a tax exemption certificate with the host government.

B.3 TYPE OF CONTRACT

This is a firm, fixed price contract payable entirely in the currency indicated in the SF-1442. No additional sums will be payable for any escalation in the cost of materials, equipment or labor, or because of the Contractor's failure to properly estimate or accurately predict the cost or difficulty of achieving the results required. The Government will not adjust the contract price due to fluctuations in currency exchange rates. The Government will only make changes in the contract price or time to complete due to changes made by the Government in the work to be performed, or by delays caused by the Government.

The Government will make payments based on quantities and unit prices only to the extent specifically provided in the contract.

SECTION C - DESCRIPTION/SPECIFICATIONS
STATEMENT OF WORK

C.1 CHARACTER AND SCOPE OF WORK

The Contractor shall furnish and install all materials required by this contract. The contract drawings are set forth in Section J as Attachment 3 and the Specifications/Statement of Work are set forth in Section J as Attachment 4.

C.2 DRAWINGS

In case of differences between small and large-scale drawings, the latter will govern. Where a portion of the work is drawn in detail and the remainder of the work is indicated in outline, the parts drawn in detail shall apply also to all other portions of the work.

SECTION D - PACKAGING AND MARKING

D.1 The Contractor shall mark materials delivered to the site as follows:

American Embassy Lusaka/USAID
Stand 694 Lot 100
Ibex Hill
Lusaka, Zambia.
Post Code: 10101

SECTION E - INSPECTION AND ACCEPTANCE

E.1 52.252-2 CLAUSES INCORPORATED BY REFERENCE (FEB 1998)

This contract incorporates one or more clauses by reference, with the same force and effect as if they were given in full text. Upon request, the Contracting Officer will make their full text available. Also, the full text of a clause may be accessed electronically at: *http://acquisition.gov/far/index.html* or *http://farsite.hill.af.mil/vffara.htm*. These addresses are subject to change.

If the Federal Acquisition Regulation (FAR) is not available at the locations indicated above, use the Department of State Acquisition website at *http://www.statebuy.state.gov/* to access the links to the FAR. You may also use an Internet "search engine" (for example, Google, Yahoo or Excite) to obtain the latest location of the most current FAR.

The following Federal Acquisition Regulation clause(s) is/are incorporated by reference (48 CFR CH. 1):

CLAUSE	TITLE AND DATE
52.232-27	PROMPT PAYMENT FOR CONSTRUCTION CONTRACTS (JUL 2013)
52.246-12	INSPECTION OF CONSTRUCTION (AUG 1996)

E.2 QUALITY ASSURANCE

The Contractor shall institute an appropriate inspection system set forth in a Quality Assurance Plan. The plan shall include checklists of duties to be carried out, ensuring these duties are carried out by the supervisory staff and senior employees, and carrying out weekly inspections to determine whether the various services are being performed according to the contract. The Contractor shall provide copies of the weekly inspection reports to the COR.

The Contractor shall correct and improve promptly any shortcomings and substandard conditions noted during inspections. The Contractor shall bring any conditions beyond the responsibility of the Contractor to the attention of the Contracting Officer or COR.

E.2.1 MONTHLY REPORT: The Contractor shall submit to the COR a monthly progress report, along with the monthly invoice, summing up observations resulting from the inspections, progress, difficulties or irregularities encountered, resolution of problems, measures taken to improve conditions, recommendations, and other matters related to this contract.

E.2.2. INSPECTION BY GOVERNMENT: The COR, or his/her authorized representatives, will inspect from time to time the services being performed and the supplies furnished to determine whether work is being performed in a satisfactory manner, and that all supplies are of acceptable quality and standards.

The Contractor shall be responsible for any countermeasures or corrective action, within the scope of this contract, which may be required by the Contracting Officer as a result of such inspection.

E.3 SUBSTANTIAL COMPLETION

E.3.1 DEFINITIONS

(a) "Substantial Completion" means the stage in the progress of the work as determined and certified by the Contracting Officer in writing to the Contractor, on which the work (or a portion designated by the Government) is sufficiently complete and satisfactory. Substantial completion means that the property may be occupied or used for the purpose for which it is intended, and only minor items such as touch-up, adjustments, and minor replacements or installations remain to be completed or corrected which:

1. do not interfere with the intended occupancy or utilization of the work, and
2. can be completed or corrected within the time period required for final completion.

(b) The "date of substantial completion" means the date determined by the Contracting Officer or authorized Government representative as of which substantial completion of the work has been achieved.

E.3.2 USE AND POSSESSION UPON SUBSTANTIAL COMPLETION

The Government shall have the right to take possession of and use the work upon substantial completion. Upon notice by the Contractor that the work is substantially complete (a Request for Substantial Completion) and an inspection by the Contracting Officer or an authorized Government representative (including any required tests), the Contracting Officer shall furnish the Contractor a Certificate of Substantial Completion. The certificate shall be accompanied by a Schedule of Defects listing items of work remaining to be performed, completed or corrected before final completion and acceptance. Failure of the Contracting Officer to list any item of work shall not relieve the Contractor of responsibility for complying with the terms of the contract. The Government's possession or use upon substantial completion shall not be deemed an acceptance of any work under the contract.

E.4 FINAL COMPLETION AND ACCEPTANCE

E.4.1 DEFINITIONS

(a) "Final completion and acceptance" means the stage in the progress of the work as determined by the Contracting Officer and confirmed in writing to the Contractor, at which all work required under the contract has been completed in a

satisfactory manner, subject to the discovery of defects after final completion, and except for items specifically excluded in the notice of final acceptance.

(b) The "date of final completion and acceptance" means the date determined by the Contracting Officer when final completion of the work has been achieved, as indicated by written notice to the Contractor.

E.4.2 FINAL INSPECTION AND TESTS

The Contractor shall give the Contracting Officer at least five (5) days advance written notice of the date when the work will be fully completed and ready for final inspection and tests. Final inspection and tests will be started not later than the date specified in the notice unless the Contracting Officer determines that the work is not ready for final inspection and so informs the Contractor.

E.4.3 FINAL ACCEPTANCE

If the Contracting Officer is satisfied that the work under the contract is complete (with the exception of continuing obligations), the Contracting Officer shall issue to the Contractor a notice of final acceptance and make final payment upon:

(a) satisfactory completion of all required tests,

(b) a final inspection that all items by the Contracting Officer listed in the Schedule of Defects have been completed or corrected and that the work is finally complete (subject to the discovery of defects after final completion), and

(c) submittal by the Contractor of all documents and other items required upon completion of the work, including a final request for payment (Request for Final Acceptance).

SECTION F - DELIVERIES OR PERFORMANCE

F.1 52.252-2 CLAUSES INCORPORATED BY REFERENCE (FEB 1998)

This contract incorporates one or more clauses by reference, with the same force and effect as if they were given in full text. Upon request, the Contracting Officer will make their full text available. Also, the full text of a clause may be accessed electronically at: *http://acquisition.gov/far/index.html* or *http://farsite.hill.af.mil/vffara.htm*. These addresses are subject to change.

If the Federal Acquisition Regulation (FAR) is not available at the locations indicated above, use the Department of State Acquisition website at *http://www.statebuy.state.gov/* to access the links to the FAR. You may also use an Internet "search engine" (for example, Google, Yahoo or Excite) to obtain the latest location of the most current FAR.

The following Federal Acquisition Regulation clauses are incorporated by reference (48 CFR CH. 1):

CLAUSE	TITLE AND DATE
52.242-14	SUSPENSION OF WORK (APR 1984)

F.2 52.211-10 COMMENCEMENT, PROSECUTION AND COMPLETION OF WORK (APR 1984)

The Contractor shall be required to:

(a) commence work under this contract within **10** days after the date the Contractor receives the notice to proceed,

(b) prosecute the work diligently, and

(c) complete the entire work ready for use not later than **60 calendar days.** The time stated for completion shall include final cleanup of the premises and completion of "punch list" items.

F.3 LIQUIDATED DAMAGES

F.3.1 52.211-12 LIQUIDATED DAMAGES - CONSTRUCTION (SEP 2000)

(a) If the Contractor fails to complete the work within the time specified in the contract, or any extension, the Contractor shall pay liquidated damages to the Government in the amount of **US$200.00** for each calendar day of delay until the work is completed or accepted.

(b) If the Government terminates the Contractor's right to proceed, liquidated damages will continue to accrue until the work is completed. These liquidated damages are in addition to excess costs of repurchase under the Default clause.

F.3.2. ASSESSMENT AND APPORTIONMENT OF LIQUIDATED DAMAGES

Liquidated damages will be assessed from the completion date indicated in the contract or extensions thereof to the date of substantial completion as actually achieved by the Contractor, as determined by the Contracting Officer.

F.4 CONTRACTOR'S SUBMISSION OF CONSTRUCTION SCHEDULES

(a) The time for submission of the schedules referenced in Section I, 52.236-15, "Schedules for Construction Contracts", paragraph (a), is hereby modified to reflect the due date for submission as "ten (10) days after receipt of an executed contract".

(b) These schedules shall include the time by which shop drawings, product data, samples and other submittals required by the contract will be submitted for approval.

(c) The Contractor shall revise such schedules (1) to account for the actual progress of the work, (2) to reflect approved adjustments in the performance schedule, and (3) as required by the Contracting Officer to achieve coordination with work by the Government and any separate contractors used by the Government. The Contractor shall submit a schedule which sequences work so as to minimize disruption at the job site.

(d) All schedules shall be in the English language and any system of dimensions (English or metric) shown shall be consistent with that used in the contract. No extension of time shall be allowed due to a delay by the Government in approving such deliverables if the Contractor has failed to act promptly and responsively in submitting its deliverables. The Contractor shall identify each deliverable as required by the contract.

F.5 ACCEPTANCE OF SCHEDULE

When the Government has accepted any time schedule, it shall be binding upon the Contractor. The completion date is fixed and may be extended only by a written contract modification signed by the Contracting Officer. Acceptance or approval of any schedule or revision thereof by the Government shall not (1) extend the completion date or obligate the Government to do so, (2) constitute acceptance or approval of any delay, or (3) excuse the Contractor from or relieve the Contractor of its obligation to maintain the progress of the work and achieve final completion by the established completion date.

F.6 NOTICE OF DELAY

If the Contractor receives a notice of any change in the work, or if any other conditions arise which are likely to cause or are actually causing delays which the Contractor believes may result in late completion of the project, the Contractor shall notify the Contracting Officer. The

Contractor's notice shall state the effect, if any, of such change or other conditions upon the approved schedule, and shall state in what respects, if any, the relevant schedule or the completion date should be revised. The Contractor shall give this notice not more than ten (10) days after the first event-giving rise to the delay or prospective delay. Only the Contracting Officer may make revisions to the approved time schedule.

F.7 NOTICE TO PROCEED

(a) After receiving and accepting any bonds or evidence of insurance, the Contracting Officer will issue the Contractor a Notice to Proceed. The Contractor shall then prosecute the work commencing and completing performance not later than the time period established in the contract.

(b) It is possible that the Contracting Officer may elect to issue the Notice to Proceed before receipt and acceptance of any bonds. Issuance of a Notice to Proceed by the Government before receipt of the required bonds or policies shall not be a waiver of the requirement to furnish these documents.

F.8 WORKING HOURS

All work shall be performed during **0800 hours to 1700 hours** except for the holidays identified below. Other hours, if requested by the Contractor, may be approved by the Contracting Officer's Representative. The Contractor shall give 24 hours in advance to COR who will consider any deviation from the hours identified above. Changes in work hours will not be a cause for a price increase.

(a) The Department of State observes the following days* as holidays:

New Year's Day
Martin Luther King's Birthday
Washington's Birthday
Memorial Day
Independence Day
Labor Day
Columbus Day
Veterans Day
Thanksgiving Day
Christmas Day
Christmas Day US/Zambian
International Women's Day – Zambian
Youth Day – Zambian
Good Friday – Zambian
Easter Monday – Zambian
Labour Day – Zambian
Independence – Zambian
Heroes Day – Zambian

Unity Day – Zambian
Farmer's Day – Zambian
Labour Day - Zambian

*Any other day designated by Federal law, Executive Order or Presidential Proclamation.

When any such day falls on a Saturday, the preceding Friday is observed; when any such day falls on a Sunday, the following Monday is observed. Observance of such days by Government personnel shall not be cause for additional period of performance or entitlement to compensation except as set forth in the contract. If the Contractor's personnel work on a holiday, no form of holiday or other premium compensation will be reimbursed either as a direct or indirect cost, unless authorized pursuant to an overtime clause elsewhere in this contract.

F.9 EXCUSABLE DELAYS

The Contractor will be allowed time, not money, for excusable delays as defined in FAR 52.249-10, Default. Examples of such cases include:

(l) acts of God or of the public enemy,
(2) acts of the United States Government in either its sovereign or contractual capacity,
(3) acts of the government of the host country in its sovereign capacity,
(4) acts of another contractor in the performance of a contract with the Government,
(5) fires,
(6) floods,
(7) epidemics,
(8) quarantine restrictions,
(9) strikes,
(l0) freight embargoes,
(11) delays in delivery of Government furnished equipment, and
(12) unusually severe weather.

In each instance, the failure to perform must be beyond the control and without the fault or negligence of the Contractor, and the failure to perform. Furthermore, the failure:

(1) must be one that the Contractor could not have reasonably anticipated and taken adequate measures to protect against,

(2) cannot be overcome by reasonable efforts to reschedule the work, and

(3) directly and materially affects the date of final completion of the project.

F.10 PRE-CONSTRUCTION CONFERENCE

A preconstruction conference will be held 5 days after contract award at U.S. Embassy Stand 694 Lot 100, Ibex Hill, Lusaka, Zambia to discuss the schedule, submittals, notice to proceed, mobilization and other important issues that affect construction progress. See FAR 52.236-26, Pre-Construction Conference in Section I.

F.11 DELIVERABLES

The following items shall be delivered under this contract:

Description	Quantity	Delivery Date	Deliver To:
H.1.2. Bonds/Insurance	1	10 days after award	CO
H.11.1. Safety Plan	1	10 days after award	COR
E.2. Quality Assurance Plan	1	10 days after award	COR
F.4. Construction Schedule	1	10 days after award	COR
H.14.1. Submittal Register	1	10 days after award	COR
F.10. Pre-Construction Conference	1	5 days after award	COR
H.13.2. Biographic Data on Personnel	1	10 days after award	COR
E.2.2. Inspection Reports	1	3 days after end of weekly period	COR
G.3.2 Payment Request	1	Last day of each month	COR
E.2.1. Progress Report	1	Every two weeks	COR
F.4.(c). Updates to Construction Schedule	1	Every two weeks	COR
E.3.2. Request for Substantial Completion	1	5 days before inspection	COR
H.4.4. As-built Drawings and Warranties	1	After final completion but before final acceptance	COR
E.4.2. Request for Final Acceptance	1	5 days before inspection	COR
F.6 Notice of Delay	1	Within 10 days after event	CO
F.8 Additional Hours	1	No later than 24 hours in advance of need	COR
H.2.4 Evidence of Insurance	1	10 days after award	CO
H.17.2 Differing Site Condition	1	Within 10 days of occurrence	CO

SECTION G - CONTRACT ADMINISTRATION DATA

G.1 AUTHORITY OF CONTRACTING OFFICER

All work shall be performed under the general direction of the Contracting Officer, who alone shall have the power to bind the Government and to exercise the rights, responsibilities, authorities and functions vested by the contract.

G.2 MONITORING OF THE CONTRACTOR

G.2.1. 652.242-70 CONTRACTING OFFICER'S REPRESENTATIVE (COR) (AUG 1999)

(a) The Contracting Officer may designate in writing one or more Government employees, by position title, to take action for the Contracting Officer under this contract. Each designee shall be identified as a Contracting Officer's Representative (COR). Such designation(s) shall specify the scope and limitations of the authority so delegated; provided, that the designee shall not change the terms or conditions of the contract, unless the COR is a warranted Contracting Officer and this authority is delegated in the designation.

(b) The COR for this contract is the **Building Engineer.**

G.2.2 DUTIES

The COR is responsible for inspection and acceptance of services. These duties include review of Contractor invoices, including the supporting documentation required by the contract. The COR may provide technical advice, substantive guidance, inspections, invoice approval, and other purposes as deemed necessary under the contract. The COR is designated as the authority to act for the Contracting Officer in matters concerning technical clarification, random inspection of Contractor performance to ensure compliance with contract specifications and acceptance of the Contractor's performance under this contract. The COR will coordinate all work with the Contractor during the term of this contract. The COR is not authorized to alter the contract's terms, or conditions, including the design to budget parameter. Such changes must be authorized by the Contracting Officer in a written modification to the contract. Reference to the project architect within documents incorporated into this contract shall be read to mean COR.

G.3 PAYMENT

G.3.1 GENERAL

Payments are subject to FAR 52.232-5, "Payments Under Fixed-Price Construction Contracts".

G.3.2 DETAIL OF PAYMENT REQUESTS

Each application for payment shall cover the value of labor and materials completed and in place, including a prorated portion of overhead and profit. The Government will make payments no more frequently than monthly, unless otherwise provided in this contract. The Contractor shall address invoices to:

Financial Management Office
American Embassy Lusaka
Stand 694 Lot 100
Ibex Hill
Lusaka, Zambia.
Post Code: 10101

G.3.3 PAYMENTS TO SUBCONTRACTORS

The Contractor shall make timely payment from the proceeds of the progress or final payment for which request is being made to subcontractors and suppliers following the Contractor's contractual arrangements with them.

G.3.4 EVALUATION BY THE CONTRACTING OFFICER

Following receipt of the Contractor's request for payment, and on the basis of an inspection of the work, the Contracting Officer shall make a determination as to the amount that is then due. If the Contracting Officer does not approve payment of the full amount applied for, less the retainage addressed in FAR 52.232-5, the Contracting Officer shall advise the Contractor of the reasons.

G.3.5 ADDITIONAL WITHHOLDING

The Government may withhold from payments due the Contractor any amounts as may be considered necessary to cover --

(a) Wages or other amounts due the Contractor's employees on this project;

(b) Wages or other amounts due employees of subcontractors on this project;

(c) Amounts due suppliers of materials or equipment for this project; and

(d) Any other amounts for which the Contractor may be held liable under this contract, including but not limited to the actual or prospective costs of correction of defective work and prospective liquidated damage when the Contractor has failed to make adequate progress.

This withholding is independent of monies retained by the Government under FAR 52.232-5, or otherwise as permitted to be retained under this contract.

G.3.6. PAYMENT

Under the authority of 52.232-27(a) the 14 day period identified in FAR 52.232-27(a)(1)(i)(A) is hereby changed to 30 days.

SECTION H - SPECIAL CONTRACT REQUIREMENTS

H.1 BOND/IRREVOCABLE LETTERS OF CREDIT REQUIREMENTS

H.1.1 BONDS/IRREVOCABLE LETTERS OF CREDIT REQUIRED

The Contractor shall furnish (1) a performance and guaranty bond and a payment bond on forms provided by and from sureties acceptable to the Government, each in the amount of 20% of the contract price, or (2) comparable alternate performance security (irrevocable letter of credit) approved by the Government such as letter of credit/guaranty shown in Section J.

H.1.2 TIME FOR SUBMISSION

The Contractor shall provide the bonds or alternate security as required by the paragraph H.1.1 above within ten (10) days after contract award. Failure to submit (1) the required bonds or other security acceptable to the Government in a timely manner; (2) bonds from an acceptable surety; or (3) bonds in the required amount, may result in rescinding or termination of the contract by the Government. If the contract is terminated, the Contractor will be liable for those costs as described in FAR 52.249-10, "Default (Fixed-Price Construction).

H.1.3 COVERAGE

The bonds or alternate performance security shall guarantee the Contractor's execution and completion of the work within the contract time and the correction of any defects after completion as required by this contract, the payment of all wages and other amounts payable by the Contractor under its subcontracts or for labor and materials, and the satisfaction or removal of any liens or encumbrances placed on the work.

H.1.4 DURATION OF COVERAGE

The required performance and payment securities shall remain in effect in the full amount required until final acceptance of the project by the Government. Upon final acceptance, the penal sum of the performance security only shall be reduced to 10% of the contract price. The performance security shall remain in effect for one year after the date of final completion and acceptance, and the Contractor shall pay any premium required for the entire period of coverage. The requirement for payment security terminates at final acceptance.

H.1.5 52.228-2 ADDITIONAL BOND SECURITY (OCT 1997)

The Contractor shall promptly furnish additional security required to protect the Government and persons supplying labor or materials under this contract if --

(a) Any surety upon any bond, or issuing financial institution for other security, furnished with this contract becomes unacceptable to the Government;

(b) Any surety fails to furnish reports on its financial condition as required by the Government; or

(c) The contract price is increased so that the penal sum of any bond becomes inadequate in the opinion of the Contracting Officer; or

(d) An irrevocable letter of credit (ILC) used as security will expire before the end of the period of required security. If the Contractor does not furnish an acceptable extension or replacement ILC, or other acceptable substitute, at least 30 days before an ILC's scheduled expiration, the Contracting Officer has the right to immediately draw on the ILC.

H.2 INSURANCE

H.2.1 AMOUNT OF INSURANCE

The Contractor is required by FAR 52.228-5 to provide whatever insurance is legally necessary. The Contractor, shall, at its own expense, provide and maintain during the entire performance period the following insurance amounts:

General Liability (includes premises/operations, collapse hazard, products, completed operations, contractual, independent contractors, broad form property damage, personal injury)

General Liability:	
(1) Bodily injury on or off site stated in U.S. dollars:	
Per Occurrence	**$10,000**
Cumulative	**$100,000**
(2) Property damage on or off site in U.S. dollars:	
Per Occurrence	**$10,000**
Cumulative	**$100,000**

The foregoing types and amounts of insurance are the minimums required. The Contractor shall obtain any other types of insurance required by local law or that are ordinarily or customarily obtained in the location of the work. The limit of such insurance shall be as provided by law or sufficient to meet normal and customary claims.

The Contractor agrees that the Government shall not be responsible for personal injuries or for damages to any property of the Contractor, its officers, agents, servants, and employees, or any other person, arising from and incident to the Contractor's performance of this contract. The Contractor shall hold harmless and indemnify the Government from any and all claims arising there from, except in the instance of gross negligence on the part of the Government.

The Contractor shall obtain adequate insurance for damage to, or theft of, materials and equipment in insurance coverage for loose transit to the site or in storage on or off the site.

H.2.2 GOVERNMENT AS ADDITIONAL INSURED

The general liability policy required of the Contractor shall name "the United States of America, acting by and through the Department of State", as an additional insured with respect to operations performed under this contract.

H.2.3 INSURANCE-RELATED DISPUTES

Failure to agree to any adjustment contemplated under this contract regarding insurance shall be a dispute within the meaning of the clause in Section I, 52.233-1, Alternate I, "Disputes". Nothing in this clause shall excuse the Contractor from proceeding with the work.

H.2.4 TIME FOR SUBMISSION OF EVIDENCE OF INSURANCE

The Contractor shall provide evidence of the insurance required under this contract within ten (10) days after contract award. Failure to timely submit this evidence, in a form acceptable to the Contracting Officer, may result in rescinding or termination of the contract by the Government.

H.3 DEFINITIONS

In addition to the definitions provided in Section I, FAR 52.202-1 and DOSAR 652.202-70, the following definitions shall apply when used in connection with this contract:

(a) “Contract Drawings or Drawings,” where indicated by the context, means those drawings specifically listed in the construction contract or as later incorporated into the contract by contract modification.

(b) “Day” means a calendar day unless otherwise specifically indicated.

(c) “Host Country” means the country in which the project is located.

(d) “Material” means all materials, fixtures and other articles incorporated in, or which are intended to remain with, the project.

(e) “Notice to Proceed” means a written notice to the Contractor from the Contracting Officer authorizing the Contractor to proceed with the work under the contract as of a date set forth in the Notice.

(f) “Other Submittals” includes progress schedules, shop drawings, testing and inspection reports, and other information required by the contract to be submitted by the Contractor for information or approval by the Government.

(g) “Project Data” includes standard drawings, diagrams, layouts, schematics, descriptive literature, illustrations, schedules, performance and test data, and similar materials furnished by the Contractor to explain in detail specific portions of the work required by the contract.

(h) "Samples" are physical examples which illustrate materials, equipment or workmanship and establish standards by which the work will be judged.

(i) "Schedule of Defects" means the list of items, prepared in connection with substantial completion of the work or early occupancy or utilization of a portion thereof, which the Contracting Officer has designated as remaining to be performed, completed or corrected before the work will be accepted by the Government.

(j) "Separate Contractor" means a contractor, other than the Contractor or any of its subcontractors, to whom the Government has awarded a contact for construction of a portion of the project.

(k) "Work" means any and all permanent construction which is intended to be incorporated into the finished project and required to be performed or otherwise provided by the Contractor under this contract, unless otherwise indicated by the context.

H.4 OWNERSHIP AND USE OF DOCUMENTS

H.4.1 OWNERSHIP AND USE OF DRAWINGS, SPECIFICATIONS AND MODELS

(a) OWNERSHIP. All specifications, drawings, and copies thereof, and models, are the property of the Government.

(b) USE AND RETURN. The Contractor shall not use or allow others to use the documents described in (a) above on other work. The Contractor shall return or account for the signed contractor set and additional copies provided to or made by the Contractor upon final completion of the work.

H.4.2 SUPPLEMENTAL DOCUMENTS

The Contracting Officer shall furnish from time to time such detailed drawings and other information as is considered necessary, in the opinion of the Contracting Officer, to interpret, clarify, supplement, or correct inconsistencies, errors or omissions in the Contract documents, or to describe minor changes in the work not involving an increase in the contract price or extension of the contract time. The Contractor shall comply with the requirements of the supplemental documents, and unless the Contractor makes objection within 20 days, their issuance shall not provide for any claim for an increase in the Contract price or an extension of contract time.

H.4.3 RECORD DOCUMENTS

The Contractor shall maintain at the project site:

- a current marked set of Contract drawings and specifications indicating all interpretations and clarifications, contract modifications, change orders, or any other departure from the contract requirements approved by the Contracting Officer; and

- a complete set of record shop drawings, product data, samples and other submittals as approved by the Contracting Officer.

H.4.4 "AS-BUILT" DOCUMENTS

After final completion of the work, but before final acceptance, the Contractor shall provide:

- complete set of "as-built" drawings, based on the record set of drawings, marked to show the details of construction as actually accomplished; and
- record shop drawings and other submittals, in the number and form as required by the specifications.

H.5 GOVERNING LAW

The laws of the United States shall govern the contract and its interpretation.

H.6 LANGUAGE PROFICIENCY

The manager assigned by the contractor to superintend the work on-site, as required by Section I, 52.236-6, "Superintendence by the Contractor", shall be fluent in written and spoken English.

H.7 LAWS AND REGULATIONS

H.7.1 COMPLIANCE REQUIRED

The Contractor shall, without additional expense to the Government, be responsible for complying with all laws, codes, ordinances, and regulations applicable to the performance of the work, including those of the host country, and with the lawful orders of any governmental authority having jurisdiction. Host country authorities may not enter the construction site without the permission of the Contracting Officer. Unless otherwise directed by the Contracting Officer, the Contractor shall comply with the more stringent of the requirements of such laws, regulations and orders and of the contract. In the event of a conflict between the contract and such laws, regulations and orders, the Contractor shall promptly advise the Contracting Officer of the conflict and of the Contractor's proposed course of action for resolution by the Contracting Officer.

H.7.2 LABOR, HEALTH AND SAFETY LAWS AND CUSTOMS

The Contractor shall comply with all local labor laws, regulations, customs and practices pertaining to labor, safety, and similar matters, to the extent that such compliance is not inconsistent with the requirements of this contract.

H.7.3 SUBCONTRACTORS

The Contractor shall give written assurance to the Contracting Officer that all subcontractors and others performing work on or for the project have obtained all requisite licenses and permits.

H.7.4 EVIDENCE OF COMPLIANCE

The Contractor shall submit proper documentation and evidence satisfactory to the Contracting Officer demonstrating compliance with this clause when directed by the Contracting Officer.

H.8 RESPONSIBILITY OF CONTRACTOR

H.8.1 DAMAGE TO PERSONS OR PROPERTY

The Contractor shall be responsible for all damages to persons or property that occur as a result of the Contractor's fault or negligence, and shall take proper safety and health precautions to protect the work, the workers, the public, and the property of others.

H.8.2 RESPONSIBILITY FOR WORK PERFORMED

The Contractor shall be responsible for all materials delivered and work performed until final completion and acceptance of the entire work, except for any completed unit of work which may have been accepted in writing under the contract.

H.9 CONSTRUCTION OPERATIONS

H.9.1 OPERATIONS AND STORAGE AREAS

(a) CONFINEMENT TO AUTHORIZED AREAS. The Contractor shall confine all operations (including storage of materials) on Government premises to areas authorized or approved by the Contracting Officer.

(b) VEHICULAR ACCESS. The Contractor shall, and in accordance with any regulations prescribed by the Contracting Officer, use only established site entrances and roadways.

H.9.2 USE OF PREMISES

(a) Occupied Premises. If the premises are occupied, the Contractor, its subcontractors, and their employees shall comply with the regulations promulgated by the Government governing access to, operation of, and conduct while in or on the premises and shall perform the work required under this contract in such a manner as not to unreasonably interrupt or interfere with the conduct of Government business.

(b) Requests from occupants. The Contractor shall refer any request from occupants of existing buildings to change the sequence of work to the Contracting Officer for determination.

(c) Access limited. The Contractor, its subcontractors and their employees shall not have access to or be admitted into any building or portion of the site outside the areas designated in this contract except with the permission of the Contracting Officer.

H.10 TEMPORARY FACILITIES AND SERVICES

The Contractor may erect temporary buildings (such as, storage sheds, shops, offices) and utilities only with the approval of the Contracting Officer. The cost of these temporary buildings is included in the contract fixed price. The temporary buildings and utilities shall remain the property of the Contractor and shall be removed by the Contractor at its expense upon completion of the work. With the written consent of the Contracting Officer, the buildings and utilities may be abandoned and need not be removed.

H.11 SAFETY

H.11.1 DOSAR 652.236-70 ACCIDENT PREVENTION (APR 2004)

(a) *General*. The Contractor shall provide and maintain work environments and procedures which will safeguard the public and Government personnel, property, materials, supplies, and equipment exposed to Contractor operations and activities; avoid interruptions of Government operations and delays in project completion dates; and, control costs in the performance of this contract. For these purposes, the Contractor shall:

(1) Provide appropriate safety barricades, signs and signal lights;
(2) Comply with the standards issued by any local government authority having jurisdiction over occupational health and safety issues; and,
(3) Ensure that any additional measures the Contracting Officer determines to be reasonably necessary for this purpose are taken.
(4) For overseas construction projects, the Contracting Officer shall specify in writing additional requirements regarding safety if the work involves:

(i) Scaffolding;
(ii) Work at heights above two (2) meters;
(iii) Trenching or other excavation greater than one (1) meter in h;

(iv) Earth moving equipment;

(v) Temporary wiring, use of portable electric tools, or other recognized electrical hazards. Temporary wiring and portable electric tools require the use of a ground fault circuit interrupter (GFCI) in the affected circuits; other electrical hazards may also require the use of a GFCI;

(vi) Work in confined spaces (limited exits, potential for oxygen less that 19.5 percent or combustible atmosphere, potential for solid or liquid engulfment, or other hazards considered to be immediately dangerous to life or health such as water tanks, transformer vaults, sewers, cisterns, etc.);

(vii) Hazardous materials – a material with a physical or health hazard including but not limited to, flammable, explosive, corrosive, toxic, reactive or unstable, or any operations which creates any kind of contamination inside an occupied building such as dust from demolition activities, paints, solvents, etc.; or

(viii) Hazardous noise levels.

(b) *Records*. The Contractor shall maintain an accurate record of exposure data on all accidents incident to work performed under this contract resulting in death, traumatic injury, occupational disease, or damage to or theft of property, materials, supplies, or equipment. The Contractor shall report this data in the manner prescribed by the Contracting Officer.

(c) *Subcontracts*. The Contractor shall be responsible for its subcontractors' compliance with this clause.

(d) *Written program.* Before commencing work, the Contractor shall:

(1) Submit a written plan to the Contracting Officer for implementing this clause. The plan shall include specific management or technical procedures for effectively controlling hazards associated with the project; and,

(2) Meet with the Contracting Officer to discuss and develop a mutual understanding relative to administration of the overall safety program.

(e) *Notification*. The Contracting Officer shall notify the Contractor of any non-compliance with these requirements and the corrective actions required. This notice, when delivered to the Contractor or the Contractor's representative on site, shall be deemed sufficient notice of the non-compliance and corrective action required. After receiving the notice, the Contractor shall immediately take corrective action. If the Contractor fails or refuses to promptly take corrective action, the Contracting Officer may issue an order suspending all or part of the work until satisfactory corrective action has been taken. The Contractor shall not be entitled to any equitable adjustment of the contract price or extension of the performance schedule on any suspension of work order issued under this clause.

H.12 SUBCONTRACTORS AND SUPPLIERS

H.12.1 CLAIMS AND ENCUMBRANCES

The Contractor shall satisfy as due all lawful claims of any persons or entities employed by the Contractor, including subcontractors, material men and laborers, for all labor performed and materials furnished under this contract, including the applicable warranty or correction period, unless the Government shall be directly liable by contract. The Contractor shall not at any time permit any lien, attachment, or other encumbrance to be entered against or to remain on the building(s), or the premises, whether public or private, or any portion thereof, as a result of nonperformance of any part of this contract.

H.12.2 APPROVAL OF SUBCONTRACTORS

(a) REVIEW AND APPROVAL. The Government reserves the right to review proposed subcontractors for a period of five (5) days before providing notice of approval or rejection of any or all subcontractors.

(b) REJECTION OF SUBCONTRACTORS. The Government reserves the right to reject any or all subcontractors proposed if their participation in the project, as determined by the Contracting Officer, may cause damage to the national security interests of the United States. The Contractor agrees to promptly replace any subcontractor rejected by the Government under this clause.

H.13 CONSTRUCTION PERSONNEL

H.13.1 REMOVAL OF PERSONNEL

The Contractor shall maintain discipline at the site and at all times take all reasonable precautions to prevent any unlawful, riotous, or disorderly conduct by or among those at the site. The Contractor shall ensure the preservation of peace and protection of persons and property in the neighborhood of the project. The Contracting Officer may require, in writing, that the Contractor remove from the work any employee that the Contracting Officer deems incompetent, careless, insubordinate or otherwise objectionable, or whose continued employment on the project is deemed by the Contracting Officer to be contrary to the Government's interests.

H.13.2 CONSTRUCTION PERSONNEL SECURITY

After award of the contract, the Contractor shall have ten days to submit to the Contracting Officer a list of workers and supervisors assigned to this project (Biographic Data on Personnel) for the Government to conduct all necessary security checks. It is anticipated that security checks will take 15 days to perform. For each individual the list shall include:

- Full Name
- Place and Date of Birth
- Current Address
- Identification number
- Name of Company

Failure to provide any of the above information may be considered grounds for rejection and/or re-submittal of the application. Once the Government has completed the security screening and approved the applicants, the Government will provide a badge to the individual for access to the site. The Government may revoke this badge at any time due to the falsification of data, or misconduct on site.

H.14 MATERIALS AND EQUIPMENT

H.14.1 SELECTION AND APPROVAL OF MATERIALS

(a) STANDARD TO QUALITY. All materials and equipment incorporated into the work shall be new and for the purpose intended, unless otherwise specified. All workmanship shall be of good quality and performed in a skillful manner that will withstand inspection.

(b) SELECTION BY CONTRACTOR. Where the contract permits the Contractor to select products, materials or equipment to be incorporated in the work, or where specific approval is otherwise required by the contract, the Contractor shall furnish a Submittal Register to the Contracting Officer, for approval. The Submittal Register shall include the names of the manufacturer, model number, and source of procurement of each such product, material or equipment, together with other pertinent information concerning the nature, appearance, dimensions, performance, capacity, and rating. To ensure a timely review the Contractor shall provide a submittal register ten days after contract award showing when shop drawings, samples, or submittals shall be made. When directed to do so, the Contractor shall submit samples for approval at the Contractor's expense, with all shipping charges prepaid. Installation or use of any products, materials or equipment without the required approval shall be at the risk of subsequent rejection.

H.14.2 CUSTODY OF MATERIALS

The Contractor shall be responsible for the custody of all materials received for incorporation into the project, including Government furnished materials, upon delivery to the Contractor or to any person for whom it is responsible, including subcontractors. The Contractor shall deliver all such items to the site as soon as practicable. If required by the Contracting Officer, the Contractor shall clearly mark in a manner directed by the Contracting Officer all items of which the Contractor has custody but which have not been delivered or secured at the site, clearly indicating the use of such items for the U.S. Government project.

H.14.3 BASIS OF CONTRACT PRICE

The contract price is based on the use of the materials, products and equipment specified in the contract, except for substitutions or "Or-Equal" items proposed by the Contractor which have been specifically approved by the Government at the time of execution of the contract. Any substitution approved by the Government after execution of the contract shall be subject to an appropriate adjustment of the contract price.

H.14.4 SUBSTITUTIONS

(a) PRIOR APPROVAL REQUIRED. The Contractor must receive approval in writing from the Contracting Officer before substitutions (1) proposed by the Contractor but not yet approved at the time of execution of the contract, or (2) proposed by the Contractor after execution of the contract may be used in the project. Sufficient information to permit evaluation by the Government must accompany any substitution request including but not limited to the reasons for the proposed substitution and data concerning the design, appearance, performance, composition, and relative cost of the proposed substitute. The Contractor shall make requests for substitutions in a timely manner to permit adequate evaluation by the Government. If, in the Contracting Officer's opinion, the use of such substitute items is not in the best interests of the Government, the Contractor must obtain the items originally specified with no adjustment in the contract price or completion date.

(b) APPROVAL THROUGH SHOP DRAWINGS. The Contractor may propose substitutions of materials in the submittal of shop drawings, provided such substitution is specifically requested in writing in the transmittal of the shop drawings to the Contracting Officer. Such substitution requests must be made in a timely manner and supported by the required information.

(c) FINAL APPROVAL ON DELIVERY. Acceptance or approval of proposed substitutions under the contract are conditioned upon approval of items delivered at the site or approval by sample. Approval by sample shall not limit the Government's right to reject material after delivery to the site if the material does not conform to the approved sample in all material respects.

H.14.5 . "OR-EQUAL CLAUSE"

References in the Specifications/Statement of Work to materials, products or equipment by trade name, make, or catalog number, or to specific processes, shall be regarded as establishing a standard of quality and shall not be construed as limiting competition. The Contractor may propose for approval or rejection by the Contracting Officer the substitution of any material, product, equipment or process that the Contractor believes to be equal to or better than that named in the Specifications/Statement of Work, unless otherwise specifically provided in this contract.

H.14.6 USE AND TESTING OF SAMPLES

("Samples" include materials and equipment.)

(a) USE. The Contractor shall send approved samples not destroyed in testing to the Contracting Officer. Those which are in good condition will be marked for identification and may be used in the work. Materials and equipment incorporated in the work shall match the approved samples within any specified tolerances. Other samples not destroyed in testing or not approved will be returned to the Contractor at its expense if so requested.

(b) FAILURE OF SAMPLES. If a sample fails to pass the specified tests described in this contract, any further samples of the same brand or make of that material or equipment may not be considered for use in performance under this contract.

(c) TAKING AND TESTING OF SAMPLES. Samples delivered on the site or in place may be taken by the Contracting Officer for additional testing by the Government outside of those required by the Contract documents. Samples failing to meet contract requirements will automatically void previous approvals of the items tested. The Contractor shall replace such materials or equipment found not to have met contract requirements, unless the Contracting Officer determines it to be in the Government's interest to accept the non-conforming materials or equipment with an appropriate adjustment of the Contract price as determined by the Contracting Officer.

(d) COST OF ADDITIONAL TESTING BY THE GOVERNMENT. When additional tests of samples are performed, only one test of each sample proposed for use will be made at the expense of the Government. Samples which do not meet contract requirements will be rejected. Further testing of additional samples, if required, will be made at the expense of the Contractor.

H.15 IMPORTED MATERIALS, EQUIPMENT, AND PERSONNEL

H.15.1 SHIPMENT AND CUSTOMS CLEARANCE

(a) Costs to be borne by Contractor. The Contractor is responsible for paying all charges incurred in obtaining materials that must be imported for the project and in transporting the materials from their place or origin to the construction site. Moving costs shall include, but not necessarily be limited to, packing, handling, cartage, overland freight, ocean freight, transshipment, port, unloading, customs clearance and duties (other than customs duties specified below), unpacking, storage, and all other charges including administrative costs in connection with obtaining and transporting the materials from their source to the project site.

(b) Duty-free clearance. The Contractor shall not be responsible for customs duties for which the Government has been able to obtain a customs waiver. The Contractor shall

follow the instructions of the Contracting Officer as to the manner of labeling the shipping containers or otherwise processing shipments of imported materials in order to obtain, or continue to receive, duty free clearance through customs. The Contractor shall be responsible for the payment of customs duties, if any, which:

(1) are imposed on items which are not labeled and processed in accordance with the Contracting Officer's instructions,

(2) are imposed on the Contractor's tools, construction equipment and machinery imported for use on the project, or

(3) are otherwise ineligible for duty-free entry. The Contractor is responsible for customs duties where the Contractor has failed to give adequate and timely notice to the Contracting Officer of importation on containers or materials which may be eligible for a customs waiver. The Contracting Officer will provide instructions concerning time periods for notification of importation by the Contractor.

(c) Customs Clearance. The Government will be responsible for obtaining customs clearances, and for obtaining exemption certificates or paying customs duties not waived, for imported products, materials and equipment which are labeled and processed in accordance with the Contracting Officer's instructions. The Government shall not be responsible for obtaining customs clearance for the Contractor's tools, construction equipment or machinery, nor for obtaining visas, entry or work permits for the Contractor's personnel.

H.15.2 SURPLUS MATERIALS

Unless otherwise specified, any surplus materials, fixtures, articles or equipment remaining at the completion of the project shall become the property of the Contractor, except those items furnished by the Government, whose cost is not included in the contract price.

H.16 SPECIAL WARRANTIES

H.16.1 SPECIAL WARRANTY OBLIGATIONS

Any special warranties that may be required under the contract shall be subject to the stipulations set forth in 52.246-21, "Warranty of Construction", as long as they do not conflict with the special warranty.

H.16.2 WARRANTY INFORMATION

The Contractor shall obtain and furnish to the Government all information required in order to make any subcontractor's, manufacturers, or supplier's guarantee or warranty legally binding and effective. The Contractor shall submit both the information and the guarantee or warranty to the Government in sufficient time to permit the Government to meet any time limit specified in the guarantee or warranty, but not later than completion and acceptance of all work under this contract.

H.17 EQUITABLE ADJUSTMENTS

H.17.1 BASIS FOR EQUITABLE ADJUSTMENTS

Any circumstance for which the contract provides an equitable adjustment that causes a change within the meaning of paragraph (a) of the "Changes" clause shall be treated as a change under that clause. The Contractor shall give the Contracting Officer written notice (within 20 days) stating:

(a) the date, circumstances, and applicable contract clause authorizing an equitable adjustment and

(b) that the Contractor regards the event as a changed condition for which an equitable adjustment is allowed under the contract.

H.17.2 DIFFERING SITE CONDITION NOTICE

The Contractor shall provide written notice of a differing site condition within 10 days of occurrence following FAR 52.236-2, Differing Site Conditions.

H.17.3 DOCUMENTATION OF PROPOSALS FOR EQUITABLE ADJUSTMENTS

(a) ITEMIZATION OF PROPOSALS AND REQUESTS. The Contractor shall submit any request for equitable adjustment in the contract price, including any change proposal submitted in accordance with the "Changes" clause, in the form of a lump sum proposal supported with an itemized breakdown of all increases and decreases in the contract price in the detail required by the Contracting Officer, The request shall include all costs and delays related to or arising out of the change or event giving rise to the proposed adjustment, including any delay damages and additional overhead costs.

(b) PROPOSED TIME ADJUSTMENTS. The Contractor shall submit a proposed time extension (if applicable) with any request for an equitable adjustment or change proposal. The request shall include sufficient information to demonstrate whether and to what extent the change will delay the completion of the contract.

(c) RELEASE BY CONTRACTOR. The price and time adjustment made in any contract modification issued as a result of a change proposal or request for an equitable adjustment shall be considered to account for all items affected by the change or other circumstances giving rise to an equitable adjustment. Upon issuance of such contract modification, the Government shall be released from any and all liability under this contract for further equitable adjustments attributable to the facts and circumstances giving rise to the change proposal or request for equitable adjustment.

H.18 NON-COMPLIANCE WITH CONTRACT REQUIREMENTS

If the Contractor, after receiving written notice from the Contracting Officer of noncompliance with any requirement of this contract, fails to initiate promptly appropriate action(s) to bring performance/work into compliance with a contract requirement within a reasonable period of time, the Contracting Officer shall have the right to order the Contractor to suspend any or all work under the contract. This order shall be in force until the Contractor has complied or has initiated such action as may be appropriate to comply within a reasonable period of time. The Contractor will not be entitled to any extension of contract time or payment for any costs incurred as a result of being ordered to suspend work for such a cause.

H.19 ZONING APPROVALS AND BUILDING PERMITS

The Government is responsible for:

- obtaining proper zoning or other land use control approval for the project,
- obtaining the approval of the Contract Drawings and Specifications,
- paying fees due, and
- obtaining and paying for the initial building permits.

SECTION I - CONTRACT CLAUSES

I.1 FAR 52.252-2 CLAUSES INCORPORATED BY REFERENCE (FEB 1998)

This contract incorporates one or more clauses by reference, with the same force and effect as if they were given in full text. Upon request, the Contracting Officer will make their full text available. Also, the full text of a clause may be accessed electronically at: *http://acquisition.gov/far/index.html* or *http://farsite.hill.af.mil/vffara.htm*. These addresses are subject to change.

If the Federal Acquisition Regulation (FAR) is not available at the locations indicated above, use the Department of State Acquisition website at *http://www.statebuy.state.gov/* to see the links to the FAR. You may also use Internet "search engines" (for example, Google, Yahoo or Excite) to obtain the latest location of the most current FAR.

The following Federal Acquisition Regulation clauses are incorporated by reference (48 CFR CH. 1):

CLAUSE	TITLE AND DATE
52.202-1	DEFINITIONS (NOV 2013)
52.203-3	GRATUITIES (APR 1984)
52.203-5	COVENANT AGAINST CONTINGENT FEES (MAY 2014)
52.203-6	RESTRICTIONS ON SUBCONTRACTOR SALES TO THE GOVERNMENT (SEPT 2006)
52.203-7	ANTI-KICKBACK PROCEDURES (MAY 2014)
52.203-8	CANCELLATION, RECISSION AND RECOVERY OF FUNDS FOR ILLEGAL OR IMPROPER ACTIVITY (MAY 2014)
52.203-10	PRICE OR FEE ADJUSTMENT FOR ILLEGAL OR IMPROPER ACTIVITY (MAY 2014)
52.203-12	LIMITATION ON PAYMENTS TO INFLUENCE CERTAIN FEDERAL TRANSACTIONS (OCT 2010)
52.203-17	CONTRACTOR EMPLOYEE WHISTLEBLOWER RIGHTS AND REQUIREMENT TO INFORM EMPLOYEES OF WHISTLEBLOWER RIGHTS (APR 2014)
52.204-4	PRINTED OR COPIED DOUBLE-SIDED ON POST CONSUMER FIBER CONTENT (MAY 2011)

52.204-7 SYSTEM FOR AWARD MANAGEMENT (JULY 2013)

52.204-9 PERSONAL IDENTITY VERIFICATION OF CONTRACTOR PERSONNEL (JAN 2011)

52.204-10 REPORTING EXECUTIVE COMPENSATION AND FIRST-TIER SUBCONTRACT AWARDS (JULY 2013)

52.209-6 PROTECTING THE GOVERNMENT'S INTEREST WHEN SUBCONTRACTING WITH CONTRACTORS DEBARRED, SUSPENDED OR PROPOSED FOR DEBARMENT (AUG 2013)

52.209-9 UPDATES OF PUBLICLY AVAILABLE INFORMATION REGARDING RESPONSIBILITY MATTERS (JULY 2013) *Alternate I*

52.215-2 AUDIT AND RECORDS – NEGOTIATION (OCT 2010)

52.215-8 ORDER OF PRECEDENCE – UNIFORM CONTRACT FORMAT (OCT 1997)

52.215-21 REQUIREMENTS FOR CERTIFIED COST OR PRICING DATA AND DATA OTHER THAN CERTIFIED COST OR PRICING DATA – MODIFICATIONS (OCT 2010)

52.216-7 ALLOWABLE COST AND PAYMENT (JUN 2013) *Alternate I (FEB 1997)*

52.222-1 NOTICE TO THE GOVERNMENT OF LABOR DISPUTES (FEB 1997)

52.222-50 COMBATING TRAFFICKING IN PERSONS (FEB 2009)

52.223-18 ENCOURAGING CONTRACTOR POLICIES TO BAN TEXT MESSAGING WHILE DRIVING (AUG 2011)

52.225-5 TRADE AGREEMENTS (NOV 2013)

52.225-13 RESTRICTIONS ON CERTAIN FOREIGN PURCHASES(JUN 2008)

52.225-14 INCONSISTENCY BETWEEN ENGLISH VERSION AND TRANSLATION OF CONTRACT (FEB 2000)

52.228-2 ADDITIONAL BOND SECURITY (OCT 1997)

52.228-4 WORKERS' COMPENSATION AND WAR-HAZARD INSURANCE OVERSEAS (APR 1984)

52.228-5 INSURANCE – WORK ON A GOVERNMENT INSTALLATION (JAN 1997)

52.228-11 PLEDGES OF ASSETS (JAN 2012)

52.228-13 ALTERNATIVE PAYMENT PROTECTION (JULY 2000)

52.228-14 IRREVOCABLE LETTER OF CREDIT (NOV 2014)

52.229-6 TAXES – FOREIGN FIXED-PRICE CONTRACTS (FEB 2013)

52.232-5 PAYMENTS UNDER FIXED-PRICE CONSTRUCTION CONTRACTS (MAY 2014)

52.232-17 INTEREST (MAY 2014)

52.232-18 AVAILABILITY OF FUNDS (APR 1984)

52.232-24 PROHIBITION OF ASSIGNMENT OF CLAIMS (MAY 2014)

52.232-27 PROMPT PAYMENT FOR CONSTRUCTION CONTRACTS (MAY 2014)

52.232-32 PERFORMANCE–BASED PAYMENTS (APR 2012)

52.232-33 PAYMENT BY ELECTRONIC FUNDS TRANSFER – SYSTEM FOR AWARD MANAGEMENT (JULY 2013)

52.232-40 PROVIDING ACCELERATED PAYMENTS TO SMALL BUSINESS SUBCONTRACTORS (DEC 2013)

52.233-1 DISPUTES (MAY 2014) *Alternate I (DEC 1991)*

52.233-3 PROTEST AFTER AWARD (AUG 1996)

52.233-4 APPLICABLE LAW FOR BREACH OF CONTRACT CLAIM (OCT 2004)

52.236-2 DIFFERING SITE CONDITIONS (APR 1984)

52.236-3 SITE INVESTIGATION AND CONDITIONS AFFECTING THE WORK (APR 1984)

52.236-5 MATERIAL AND WORKMANSHIP (APR 1984)

52.236-6 SUPERINTENDENCE BY THE CONTRACTOR (APR 1984)

52.236-7 PERMITS AND RESPONSIBILITIES (NOV 1991)

52.236-8 OTHER CONTRACTS (APR 1984)

52.236-9 PROTECTION OF EXISTING VEGETATION, STRUCTURES, EQUIPMENT, UTILITIES, AND IMPROVEMENTS (APR 1984)

52.236-10 OPERATIONS AND STORAGE AREAS (APR 1984)

52.236-11 USE AND POSSESSION PRIOR TO COMPLETION (APR 1984)

52.236-12 CLEANING UP (APR 1984)

52.236-14 AVAILABILITY AND USE OF UTILITY SERVICES (APR 1984)

52.236-15 SCHEDULES FOR CONSTRUCTION CONTRACTS (APR 1984)

52.236-21 SPECIFICATIONS AND DRAWINGS FOR CONSTRUCTION (FEB 1997)

52.236-26 PRECONSTRUCTION CONFERENCE (FEB 1995)

52.242-3 PENALTIES FOR UNALLOWABLE COSTS (MAY 2014)

52.242-13 BANKRUPTCY (JULY 1995)

52.243-4 CHANGES (JUN 2007)

52.244-6 SUBCONTRACTOR AND COMMERCIAL ITEMS (JULY 2014)

52.245-1 GOVERNMENT PROPERTY (APR 2012)

52.243-5 CHANGES AND CHANGED CONDITIONS (APR 1984)

52.245-9 USE & CHARGES (APR 2012)

52.246-21 WARRANTY OF CONSTRUCTION (MAR 1994)

52.247-63 PREFERENCE FOR U.S-FLAG CARRIERS (JUN 2003)
52.247-64 PREFERENCE FOR PRIVATELY-OWNED U.S-FLAG COMMERCIAL VESSELS (FEB 2006)

52.248-3 VALUE ENGINEERING – CONSTRUCTION (OCT 2010)

52.249-2 TERMINATION FOR CONVENIENCE OF THE GOVERNMENT (FIXED-PRICE) (APR 2012) *Alternate I (SEPT 1996)*

52.249-14 EXCUSABLE DELAYS (APR 1984)

52.249-10 DEFAULT (FIXED-PRICE CONSTRUCTION) (APR 1984)

The following Department of State Acquisition Regulations (DOSAR) are set forth in full text:

I.1 652.204-70 DEPARTMENT OF STATE PERSONAL IDENTIFICATION CARD ISSUANCE PROCEDURES (MAY 2011)

(a) The Contractor shall comply with the Department of State (DOS) Personal Identification Card Issuance Procedures for all employees performing under this contract who require frequent and continuing access to DOS facilities, or information systems. The Contractor shall insert this clause in all subcontracts when the subcontractor's employees will require frequent and continuing access to DOS facilities, or information systems.

(b) The DOS Personal Identification Card Issuance Procedures may be accessed at *http://www.state.gov/m/ds/rls/rpt/c21664.htm*.

(End of clause)

I.2 652.243-70 NOTICES (AUG 1999)

Any notice or request relating to this contract given by either party to the other shall be in writing. Said notice or request shall be mailed or delivered by hand to the other party at the address provided in the schedule of the contract. The Contracting Officer must make all modifications to the contract in writing.

I.3 652.242-73 AUTHORIZATION AND PERFORMANCE (AUG 1999)

(a) The Contractor warrants the following:

(1) That is has obtained authorization to operate and do business in the country or countries in which this contract will be performed;

(2) That is has obtained all necessary licenses and permits required to perform this contract; and,

(3) That it shall comply fully with all laws, decrees, labor standards, and regulations of said country or countries during the performance of this contract.

(b) If the party actually performing the work will be a subcontractor or joint venture partner, then such subcontractor or joint venture partner agrees to the requirements of paragraph (a) of this clause.

I.4 RESERVED

I.5 THE FOLLOWING CLAUSE IS APPLICABLE, IF CHECKED:

[x] 652.229-70 EXCISE TAX EXEMPTION STATEMENT FOR CONTRACTORS WITHIN THE UNITED STATES (JULY 1988)

This is to certify that the item(s) covered by this contract is/are for export solely for the use of the U.S. Foreign Service Post identified in the contract schedule.

The Contractor shall use a photocopy of this contract as evidence of intent to export. Final proof of exportation may be obtained from the agent handling the shipment. Such proof shall be accepted in lieu of payment of excise tax.

I.6. 52.228-15 PERFORMANCE AND PAYMENT BONDS—CONSTRUCTION (OCT 2010)

(a) *Definitions*. As used in this clause—

"Original contract price" means the award price of the contract; or, for requirements contracts, the price payable for the estimated total quantity; or, for indefinite-quantity contracts, the price payable for the specified minimum quantity. Original contract price does not include the price of any options, except those options exercised at the time of contract award.

(b) *Amount of required bonds*. Unless the resulting contract price is $150,000 or less, the successful offeror shall furnish performance and payment bonds to the Contracting Officer as follows:

(1) *Performance bonds (Standard Form 25)*. The penal amount of performance bonds at the time of contract award shall be 100 percent of the original contract price.

(2) *Payment Bonds (Standard Form 25-A)*. The penal amount of payment bonds at the time of contract award shall be 100 percent of the original contract price.

(3) Additional bond protection.

(i) The Government may require additional performance and payment bond protection if the contract price is increased. The increase in protection generally will equal 100 percent of the increase in contract price.

(ii) The Government may secure the additional protection by directing the Contractor to increase the penal amount of the existing bond or to obtain an additional bond.

(c) *Furnishing executed bonds*. The Contractor shall furnish all executed bonds, including any necessary reinsurance agreements, to the Contracting Officer, within the time period specified in the Bid Guarantee provision of the solicitation, or otherwise specified by the Contracting Officer, but in any event, before starting work.

(d) *Surety or other security for bonds*. The bonds shall be in the form of firm commitment, supported by corporate sureties whose names appear on the list contained in Treasury Department Circular 570, individual sureties, or by other acceptable security such as postal money order, certified check, cashier's check, irrevocable letter of credit, or bonds or notes of the United States. Treasury Circular 570 is published in the Federal Register or Department of Treasury, Financial Management Service, Surety Bond Branch, 3700 East West Highway, Room 6F01, Hyattsville, MD 20782, or via the internet at *http://www.fms.treas.gov/c570/c570.html*.

(e) *Notice of subcontractor waiver of protection (40 U.S.C. 3133(c)).* Any waiver of the right to sue on the payment bond is void unless it is in writing, signed by the person whose right is waived, and executed after such person has first furnished labor or material for use in the performance of the contract."

I.7 652.225-71 SECTION 8(A) OF THE EXPORT ADMINISTRATION ACTS OF 1979, as amended (AUG 1999)

(a) Section 8(a) of the U.S. Export Administration Act of 1979, as amended (50 U.S.C. 2407(a)), prohibits compliance by U.S. persons with any boycott fostered by a foreign country against a country which is friendly to the United States and which is not itself the object of any form of boycott pursuant to United States law or regulation. The Boycott of Israel by Arab League countries is such a boycott, and therefore, the following actions, if taken with intent to comply with, further, or support the Arab League Boycott of Israel, are prohibited activities under the Export Administration Act:

(1) Refusing, or requiring any U.S. person to refuse to do business with or in Israel, with any Israeli business concern, or with any national or resident of Israel, or with any other person, pursuant to an agreement of, or a request from or on behalf of a boycotting country;

(2) Refusing, or requiring any U.S. person to refuse to employ or otherwise discriminating against any person on the basis of race, religion, sex, or national origin of that person or of any owner, officer, director, or employee of such person;

(3) Furnishing information with respect to the race, religion, or national origin of any U.S. person or of any owner, officer, director, or employee of such U.S. person;

(4) Furnishing information about whether any person has, has had, or proposes to have any business relationship (including a relationship by way of sale, purchase, legal or commercial representation, shipping or other transport, insurance, investment, or supply) with or in the State of Israel, with any business concern organized under the laws of the State of Israel, with any Israeli national or resident, or with any person which is known or believed to be restricted from having any business relationship with or in Israel;

(5) Furnishing information about whether any person is a member of, has made contributions to, or is otherwise associated with or involved in the activities of any charitable or fraternal organization which supports the State of Israel; and,

(6) Paying, honoring, confirming, or otherwise implementing a letter of credit which contains any condition or requirement against doing business with the State of Israel.

(b) Under Section 8(a), the following types of activities are not forbidden ``compliance with the boycott,'' and are therefore exempted from Section 8(a)'s prohibitions listed in paragraphs (a)(1)-(6) above:

(1) Complying or agreeing to comply with requirements:

(i) Prohibiting the import of goods or services from Israel or goods produced or services provided by any business concern organized under the laws of Israel or by nationals or residents of Israel; or,

(ii) Prohibiting the shipment of goods to Israel on a carrier of Israel, or by a route other than that prescribed by the boycotting country or the recipient of the shipment;

(2) Complying or agreeing to comply with import and shipping document requirements with respect to the country of origin, the name of the carrier and route of shipment, the name of the supplier of the shipment or the name of the provider of other services, except that no information knowingly furnished or conveyed in response to such requirements may be stated in negative, blacklisting, or similar exclusionary terms, other than with respect to carriers or route of shipments as may be permitted by such regulations in order to comply with precautionary requirements protecting against war risks and confiscation;

(3) Complying or agreeing to comply in the normal course of business with the unilateral and specific selection by a boycotting country, or national or resident thereof, of carriers, insurance, suppliers of services to be performed within the boycotting country or specific goods which, in the normal course of business, are identifiable by source when imported into the boycotting country;

(4) Complying or agreeing to comply with the export requirements of the boycotting country relating to shipments or transshipments of exports to Israel, to any business concern of or organized under the laws of Israel, or to any national or resident of Israel;

(5) Compliance by an individual or agreement by an individual to comply with the immigration or passport requirements of any country with respect to such individual or any member of such individual's family or with requests for information regarding requirements of employment of such individual within the boycotting country; and,

(6) Compliance by a U.S. person resident in a foreign country or agreement by such person to comply with the laws of that country with respect to his or her activities exclusively therein, and such regulations may contain exceptions for such resident complying with the laws or regulations of that foreign country governing imports into such country of trademarked, trade named, or similarly specifically identifiable products, or components of products for his or her own use, including the performance of contractual services within that country, as may be defined by such regulations.

I.8 652.229-71 PERSONAL PROPERTY DISPOSITION AT POSTS ABROAD (AUG 1999)

Regulations at 22 CFR Part 136 require that U.S. Government employees and their families do not profit personally from sales or other transactions with persons who are not themselves entitled to exemption from import restrictions, duties, or taxes. Should the Contractor experience importation or tax privileges in a foreign country because of its contractual relationship to the United States Government, the Contractor shall observe the

requirements of 22 CFR Part 136 and all policies, rules, and procedures issued by the chief of mission in that foreign country.

I.9 CONTRACTOR IDENTIFICATION (JULY 2008)

Contract performance may require contractor personnel to attend meetings with government personnel and the public, work within government offices, and/or utilize government e-mail.

Contractor personnel must take the following actions to identify themselves as non-federal employees:

1) Use an e-mail signature block that shows name, the office being supported and company affiliation (e.g. "John Smith, Office of Human Resources, ACME Corporation Support Contractor");
2) Clearly identify themselves and their contractor affiliation in meetings;
3) Identify their contractor affiliation in Departmental e-mail and phone listings whenever contractor personnel are included in those listings; and
4) Contractor personnel may not utilize Department of State logos or indicia on business cards.

PART III - LIST OF DOCUMENTS, EXHIBITS AND OTHER ATTACHMENTS

SECTION J - LIST OF ATTACHMENTS

ATTACHMENT NO.	DESCRIPTION OF ATTACHMENT	NO. PAGES
Attachment 1	Sample Bank Letter of Guaranty	1
Attachment 2	Breakdown of Proposal Price by Bills of Quantities	2
Attachment 3	Drawings	3
Attachment 4	Specifications	6

ATTACHMENT #1 - SAMPLE LETTER OF BANK GUARANTY

Place **[ ]**
Date **[ ]**

Contracting Officer
U.S. Embassy, **[*Post name*]**
[*Mailing Address*]

Letter of Guaranty No**.** _____

SUBJECT: Performance and Guaranty

The Undersigned, acting as the duly authorized representative of the bank, declares that the bank hereby guarantees to make payment to the Contracting Officer by check made payable to the Treasurer of the United States, immediately upon notice, after receipt of a simple written request from the Contracting Officer, immediately and entirely without any need for the Contracting Officer to protest or take any legal action or obtain the prior consent of the Contractor to show any other proof, action, or decision by an other authority, up to the sum of **[*Note to CO: insert amount equal to 40% of the contract price in U.S. dollars during the period ending with the date of final acceptance, and 10% of the contract price during contract guaranty period*]**, which represents the deposit required of the Contractor to guarantee fulfillment of his obligations for the satisfactory, complete, and timely performance of the said contract **[*Note to CO: contract number*]** for **[*Note to CO: description of work*]** at **[*Note to CO: location of work*]** in strict compliance with the terms, conditions and specifications of said contract, entered into between the Government and **[*Note to CO: name of contractor*]** of **[*Note to CO: address of contractor*]** on **[*Note to CO: contract date*]**, plus legal charges of 10% per annum on the amount called due, calculated on the sixth day following receipt of the Contracting Officer's written request until the date of payment.

The undersigned agrees and consents that said contract may be modified by Change Order or Supplemental Agreement affecting the validity of the guaranty provided, however, that the amount of this guaranty shall remain unchanged.

The undersigned agrees and consents that the Contracting Officer may make repeated partial demands on the guaranty up to the total amount of this guaranty, and the bank will promptly honor each individual demand.

This letter of guaranty shall remain in effect until 3 months after completion of the guaranty period of Contract requirement.

Depository Institution: **[*name*]**
Address: _____
Representatives: _____ Location: _____
_____ State of Inc.: _____
_____ Corporate Seal:
_____

Certificate of Authority is attached evidencing authority of the signer to bind the bank to this document.

ATTACHMENT #2 BREAKDOWN OF PROPOSAL PRICE BY BILL OF QUANTITIES

Description	Unit	Qty	Rate	Total (Zambian Kwacha)
PROPOSED RE- CONSTRUCTION OF BOUNDARY WALL AT 55				
KABULONGA ROAD				
TEMPORARY FENCING				
EXCAVATION AND EARTHWORKS				
Construct fence using corrugated iron sheets support on timber posts	item	1		
EARTH WORKS				
DEMOLITION				
Remove all materials from the collapsed wall fence , including the	item	1.0		
the old foundation concrete				
EXCAVATIONS as described				
Excavate in trenches 1000mm wide for foundation footing , average	m	260		
depth 800mm				
Excavate ditto in rock	item	1		
DISPOSAL				
Load and transport surplus excavated materials to a tip to be	item	1		
provided by the contractor.				
BACKFILLING				
back fill around footing and level ground	item	1		
CONCRETE Class 25/19				
325mm by 1200mm concrete footing	m^3	110		
BLOCKWORK IN HOLLOW SAND CEMENT BLOCK FILLED SOLID				
WITH CONCRETE(GRADE 15) IN CEMENT MORTAR(1:4)				

200mm walls	m²	800		
Reinforcement				
Y12	kg	8500		
General items				
Allow for removal of trees/Stumps	item	1		
Allow for construction of weep holes along the fence	item	1		
Allow for construction of drain along the wall	m	260		
Allow for security lighting along the wall	m	1		
Allow for installation of razor wire including "Y" supports	m	260		

ATTACHMENT #3 DRAWINGS

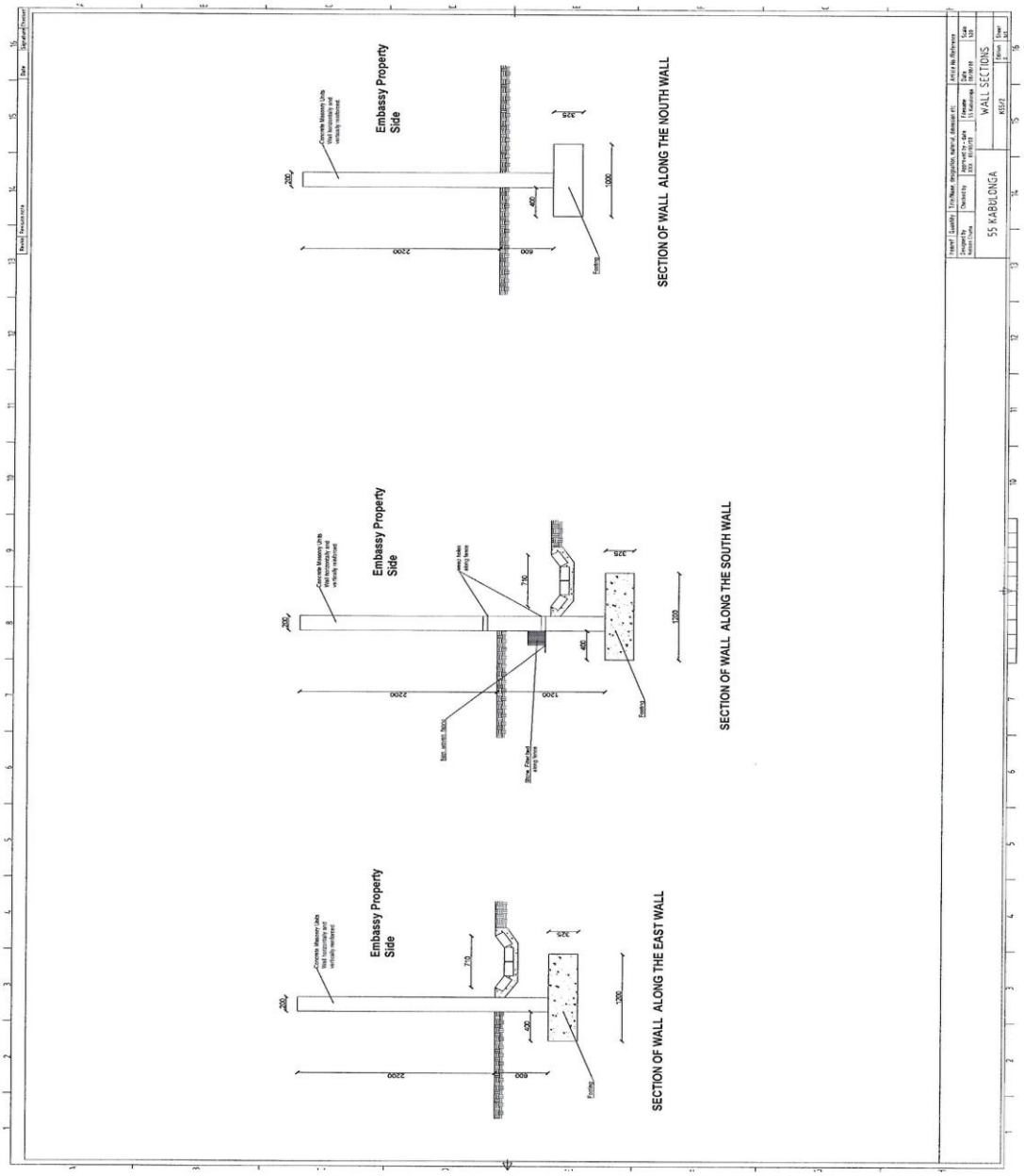

REINFORCEMENT DETAILS

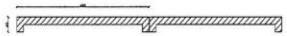

Typical Concrete Blockwork Detail with Expansion Joint

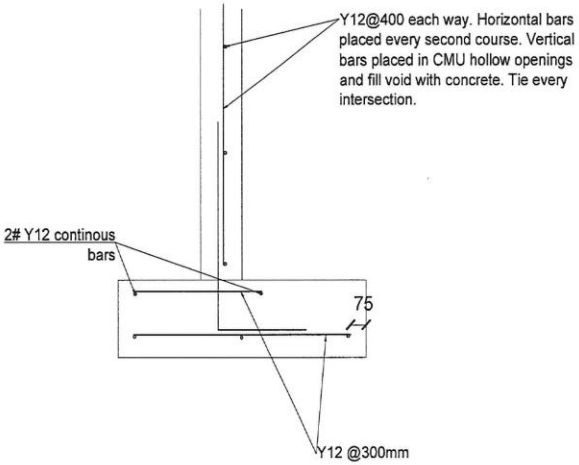

REINFORCEMENT DETAILS

Revisi	Revision note	Date	Signature	Checked

Item nr	Quantity	Title/Name designation, material, dimension etc	Article No./Reference
Designed by Nelson Chuma	Checked by KKK	Approved by - date XXX 09/09/99	Filename 55-Kabulonga	Date 02/02/00	Scale 1:8
55 KABULONGA	REINFORCEMENT DETAILS K55/3	Edition 4	Sheet 3 of

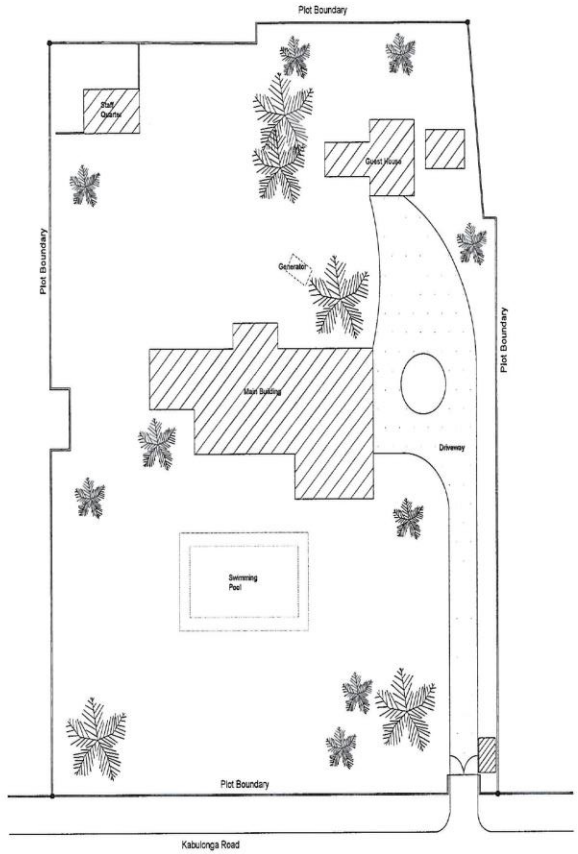

Revision	Revision note	Date	Signature	Checked

Drawing	Quantity	Title/Name designation, material, dimension etc.	Article No./Reference

Designed by	Checked by	Approved by - date	Filename	Date	Scale
Nelson Chuka	Nelson Chuka	KCCS - 01/10/08	55 KABULONGA	08/10/15	1:250

55 KABULONGA

SITE PLAN

KSS/1

Edition 1

Sheet 1/1

ATTACHMENT #4 SPECIFICATIONS

1. THE CONTRACTOR WILL BE RESPONSIBLE FOR:

1.1 Scope Summary

The scope includes the following:

1.1.1. Erection of a temporary fence before demotion a section of the existing wall. The temporary fence shall be erected using corrugated iron sheets, minimum height 1800mm supported on timber vertical and horizontal posts. The timber size shall be 100mm x 50mm.

1.1.2. Removing the existing concrete wall panels (including the existing footing) and disposal as directed by the COR. The Contractor shall remove any trees or stamps near the fence line. . TOTAL LENGTH 260m

1.1.3. Excavating to the required founding level. The founding level shall be inspected before casting any concrete to insure that the subgrade has been compacted, free of standing water, unstable ground and debris.

1.1.4. The Contractor shall ensure a founding level of at least 925mm below ground and shall cast a 325mm 1200mm wide reinforced footing as per drawing. Concrete mix shall produce a concrete with fc= 25Mpa at 28 days with a maximum w/c ratio of 0.54.

1.1.5. The Contractor shall erect a concrete masonry unit wall 2200mm above the higher ground and provide joints at every 4000mm along the entire perimeter of the fence. The hollow CMU shall be reinforced horizontally every two courses and 400mm vertically. All reinforcement joints shall be tied. The void in the CMU shall be filled with 20MPa concrete. Steeping of the wall shall be allowed to take care of the property gradient changes and shall only be located at joint location. The wall height shall be measured from the higher ground level..

1.1.6. The contractor shall cast a spoon drain along the south and east wall to direct rain water to the existing city storm drain along Kabulonga Road. The drain detail is shown on the drawings.

1.1.7. The Contractor shall install razor wire. The razor wire shall be install on ‘Y’ supports embedded in concrete and three straining wire placed inside the razor wire loop.

- Removal of excess soil in the yard.

1.2 Material Specifications

1.2.1 Cement

Cement shall comply with the Zambian Bureau of Standards ZS EN 197-1 for common cements.

1.2.2 Concrete Blocks

The nominal face dimensions of the blocks shall be 390mm by 190mm by 190mm and shall have minimum compression strength of 5MPa. The block shall be free of surface cracks, shall have regular and defined edges and shall not be warped. The surface texture shall not be too porous with no visible surface voids. The Blocks shall hydraulically compact and adequately cured to achieve the required strength. The blocks shall be obtained from the same manufacturer to ensure consistency in size, colour and texture.

1.2.3 Mortar Materials

Mortar shall be a composition of cement and building sand with a 1: 5 mixing ratio. The ratios are measured by volume. The sand shall be free of organic and clay matters. No sand particles shall be greater than 3mm.

1.2.4 Course Aggregate

The aggregate shall be crushed stone with a uniform grading and a grading size ranging from 4.75mm to 20mm.The Aggregate shall be free of foreign matters such as organic and clay materials.

1.2.5 Fine Aggregate

Fine aggregate shall either be natural or crushed stone with a well graded particle distribution with not more than 18% and not less than 8% retained on an individual sieve except that less than 8 % may be retained on the coarsest sieve (0.3mm) sieve and the (0.15mm) sieve.

1.2.6 Joint Reinforcement

Joint reinforcement shall diameter 12 bars every 400mm each way as show on the drawings.

1.2.5 Footing Reinforcement

Footing reinforcement shall diameter 12 bars.

1.2.6 Filter Materials

Crushed stones of average particle size of 40mm

1.3 Material Storage and Delivery

1.3.1 Cement

The cement shall not be exposed to moisture. This means that be left on the ground to draw moisture from the soil. Keep cement in waterproof storage.

1.3.2 Blocks

Deliver blocks in undamaged condition. Store and handle blocks to prevent their deterioration or damage.

1.3.3 Aggregate and Sand

Store bulk materials to prevent contamination

1.4 Execution

1.4.1 Demolition

Except for items or materials indicated to be reused, reinstalled or otherwise indicated to remain at the property, remove demolished materials from site and legally dispose of them.

- Do not allow demolished materials to accumulate on site
- Remove and transport debris on a manner that will prevent spillage
- Clean adjacent structures of dust and dirt caused by demotion operations and return the adjacent area to conditions existing before demotion operations began.

1.4.2 Excavation

Excavate foundation footing to indicated depth, width and line. Stepping of the founding level is permitted to allow for sloped ground elevation. The minimum depth at the upper step shall not be less than 925mm measured from the Embassy property side. The founding level shall be inspected before casting any concrete to insure that the subgrade has been compacted, free of water and free of debris.

1.4.3 Backfilling

Backfill around the foundation footing in layers not exceeding 150mm using hand rammers.

1.4.3 Concrete.

Concrete shall be mixed in approved concrete mixer. Batching shall be by means of a batching box and mixing ratio shall be designed to produce a concrete strength of 25Mpa at 28 days with a maximum water/concrete ratio of 0.54. The amount of water added shall just be enough to allow workability of the concrete. Deposit concrete continuously or in layers of such thickness that no new concrete is placed on concrete that has hardened and cause seams or planes of weakness. Cast concrete to depth indicated.

1.4.4 Mortar

Mix just enough mortar for the task. Do not use mortar that has been mixed for more than one hour.

1.5 Quality Control

1.5.1 Supervision

The Contractor shall provide full time supervisor to ensure quality of work output. The supervisor shall be full time on site and shall submit daily dairies to the COR at the end of each shift.

1.5.2 Concrete Placement

Prior to placing the concrete blocks remove laitance loose aggregate or other materials that would prevent mortar from bonding with the foundation.

1.5.3 Mortar Joints

The maximum mortar joint shall be 20mm. Make vertical and horizontal joints equal and of uniform thickness. Place the blocks in half running bond patterns.

1.5.4 Tolerances

Lay concrete blocks with bed and head joints filled from the face of the units. Remove excess mortar and dry brush exposed blocks prior to the end of each workday. The blocks shall be laid level and plumb.

2. Works and Quantities

See attached Bill of Quantities.

3. FOR THE EXECUTIONS OF THE SERVICES:

A. The CONTRACTOR must issue a liability statement of the services, assuming complete responsibility for having performed the work in accordance to the SOW, and clearly accepting entire responsibility of the work for a period of time of one year, starting from the acceptance date of the work by the CONTRACTING OFFICER. This statement must stipulate that any needed repairs to the work performed will be provided by the CONTRACTOR at his entire expense with no delays.

B. The CONTRACTOR will provide all the materials, equipment, tools, labor, permits and other necessary documents required to execute the work at his/her entire expense.

C. The CONTRACTOR shall provide a full time supervisor on Site. The Supervisor shall keep record of all site activities and shall have powers to receive and act on instructions from the CONTRACTING OFFICER'S REPRESENTATIVES. The Supervisor shall be having technical knowledge and experience in blockwork.

D. The USG shall not be liable or responsible in any manner for the contractor shipments and the sole responsibility for timely arrival of materials and supplies lies solely with the contractor

E. The CONTRACTOR is responsible to supply and enforce the use of individual protective equipment (PPE), required for the kind of work to be performed, in perfect condition and according to the present safety codes.

F. Any changes to the SOW proposed by the CONTRACTOR can only be implemented after a written approval by the CONTRACTING OFFICER. The CONTRACTING OFFICER has the right to deny changes to the SOW even if it has already been executed, if previous approval was not consented.

G. The CONTRACTOR must submit for acceptance a proposed "project working schedule", indicating the work to be performed and the implementation time frame. Once approved by the CONTRACTING OFFICER this "proposed work schedule" will become part of the contract documentation and must be followed by the CONTRACTOR.

H. It is the CONTRACTOR'S responsibility to maintain a clean and safe working environment. Trash containers must be kept at the work site and all trash and debris must be removed from the work site as deemed necessary by the CONTRACTING OFFICER.

I. The CONTRACTOR is responsible for enforcing the necessary safety procedures in order to reduce the risk of fire, and must not store flammable material or fuel at the work place. All electrical work (both temporary and permanent must comply with local electrical codes and safety requirements.

1. ACCESS OF THE WORKERS AND VEHICLES TO THE WORK SITE

A. The CONTRACTOR must provide, in writing, to the CONTRACTING OFFICER, a complete list of all his/her workers, and vehicles that will be used at the work site. This list should contain the name and employee number of all the workers, copy of the official working document, brand, model, color, and license plate of the vehicles, which should be sent by e-mail during business hours, within two business days (i.e. 48) hours prior to accessing the project grounds.

4. RESPONSIBLITIES AND INCUMBENCIES

A. The contracted services must be performed in accordance to the specifications presented by the CONTRACTING OFFICER.

B. The CONTRACTOR must inspect the work place and carefully examine the technical material presented by the CONTRACTING OFFICER, and cannot, in any circumstances, argue about lack of knowledge of the details and conditions required to perform the work, and it is his/her entire responsibility for the project performance.

C. Any and all costs and local authority's requirements related to this project, such as: licenses, fees, taxes, insurance, fines, rentals, etc., will be provided at the CONTRACTOR'S expense. This must be done with maximum effort on the part of the CONTRACTOR, so that the administrative, fiscal and technical aspects of the work, do not delay the project.

D. It is the CONTRACTOR'S responsibility to provide all materials, tools, manpower and equipment necessary for the correct execution of the contracted services within the established deadline, except when expressly indicated.

E. The CONTRACTOR will be fully responsible for the efficiency of the services, as expressed by the affective Codes, the Statement of Work and any other contractual or technical documents.

F. The CONTRACTOR must state on the proposal that he/she fully understands the project documents and the services to be performed.

I. In case of any discrepancies, the CONTRACTOR must provide immediate communication, in writing, to the CONTRACTING OFFICER, stating the facts, before the correspondent services are performed, indicating any discrepancies, errors or omissions that might be observed, including aspects regarding technical rules, regulations or laws, in order to prevent errors or discrepancies that might bring issues to the intended development of the work.

II. If the CONTRACTOR fails to disclose errors, omissions or discrepancies, the CONTRACTOR cannot refuse to fix them, at his/her own expenses, nor can the CONTRACTOR request to extend the contractual deadline without written permission from the CONTRACTING OFFICER.

III. It is mandatory that the CONTRACTOR must visit and inspect the work site where services will be performed, and cannot, under any circumstances argue about not

being aware of the local conditions, and he/she will be solely responsible for the area during construction.

IV. For the services listed here, the CONTRACTOR will be responsible for supplying and safely storing all tools and equipment required to complete the project within the contracted period of time.

V. The CONTRACTOR will be responsible for all the damages that might occur on the property and/or any third parties hired by the CONTRACTOR for the execution of the contracted services.

VI. For the services executed and the equipment supplied, until the acceptance of the work, the CONTRACTOR will be the only responsible party for all working areas covered by the contract to include existing and temporary structures within or surrounding the work area of the actual works to be performed.

VII. The CONTRACTOR will be fully responsible for any areas adversely affected by the performance of the work, and he/she will be fully liable for maintaining the area and repairing any damages that were caused by the work.

VIII. The CONTRACTOR will have to enclose the entire working area to avoid the access of non-authorized people, and will be responsible for any material or physical damage at the work site.

5. SUBCONTRACTS

A. The CONTRACTOR cannot subcontract any services that have been established in this contract without the written permission of the CONTRACTING OFFICER.

6. GENERAL ORIENTATION AND FISCALIZATION

A. The CONTRACTING OFFICER will supervise the execution of the services and has the right to designate, if he/she wishes, a licensed engineer, as the CONTRACTING OFFICER REPRESENTATIVE, to inspect and follow the work.

7. WORK ORDERS

A. In the event of any unforeseen changes of services listed in the “STATEMENT OF WORK” or other project documents, the CONTRACTOR can only implement them after written authorization of the CONTRACTING OFFICER.

8. ADDINGS AND MODIFICATIONS

A. In the event of any unforeseen changes of services listed in the “STATEMENT OF WORK” or other project documents, the CONTRACTOR can only implement them after written authorization of the CONTRACTING OFFICER.

9. COMPLEMENTARY OBSERVATIONS

A. For implementing the services, the following must also be observed;

I. The local and U.S. construction codes and related laws.

II. The material specifications standards

PART IV - REPRESENTATIONS AND INSTRUCTIONS

SECTION K - REPRESENTATIONS, CERTIFICATIONS AND OTHER STATEMENTS OF OFFERORS OR QUOTERS

K.1 52.203-2 CERTIFICATE OF INDEPENDENT PRICE DETERMINATION (APR 1985)

(a) The offeror certifies that-

(1) The prices in this offer have been arrived at independently, without, for the purpose of restricting competition, any consultation, communication, or agreement with any other offeror or competitor relating to-

(i) Those prices;
(ii) The intention to submit an offer;, or
(iii) The methods or factors used to calculate the prices offered.

(2) The prices in this offer have not been and will not be knowingly disclosed by the offeror, directly or indirectly, to any other offeror or competitor before bid opening (in the case of a sealed bid solicitation) or contract award (in the case of a negotiated solicitation) unless otherwise required by law; and

(3) No attempt has been made or will be made by the offeror to induce any other concern to submit or not to submit an offer for the purpose of restricting competition.

(b) Each signature on the offer is considered to be a certification by the signatory that the signatory-

(1) Is the person in the offeror's organization responsible for determining the prices being offered in this bid or proposal, and that the signatory has not participated and will not participate in any action contrary to subparagraph (a)(1) through (a)(3) above; or

(2) (i) Has been authorized, in writing, to act as agent for the following principals in certifying that those principals have not participated, and will not participate in any action contrary to subparagraphs (a)(1) through (a)(3) above ***insert full name of person(s) in the offeror's organization responsible for determining the prices offered in this bid or proposal, and the title of his or her position in the offeror's organization*****;** and

(ii) As an authorized agent, does certify that the principals named in subdivision (b)(2)(i) above have not participated, and will not participate, in any action contrary to subparagraphs (a)(1) through (a)(3) above; and

(iii) As an agent, has not personally participated, and will not participate, in any action contrary to subparagraphs (a)(1) through (a)(3) above.

(c) If the offeror deletes or modifies subparagraph (a)(2) above, the offeror must furnish with its offer a signed statement setting forth in detail the circumstances of the disclosure.

K.2 52.203-11 CERTIFICATION AND DISCLOSURE REGARDING PAYMENTS TO INFLUENCE CERTAIN FEDERAL TRANSACTIONS (SEP 2007)

(a) Definitions. As used in this provision – "Lobbying contact" has the meaning provided at 2 USC 1602(8). The terms "agency", "influencing or attempting to influence", "officer or employee of an agency", "person", "reasonable compensation", and "regularly employed" are defined in the FAR clause of this solicitation entitled Limitation on Payments to Influence Certain Federal Transactions (52.203-12).

(b) Prohibition. The prohibition and exceptions contained in the FAR clause of this solicitation entitled "Limitation on Payments to Influence Certain Federal Transactions" (52.203-12) are hereby incorporated by reference in this provision.

(c) Certification. The offeror, by signing its offer, hereby certifies to the best of his or her knowledge and belief that no Federal appropriated funds have been paid or will be paid to any person for influencing or attempting to influence an officer or employee of any agency, a Member of Congress, an officer or employee of Congress, or an employee of a member of Congress on its behalf in connection with the awarding of this contract.

(d) Disclosure. If any registrants under the Lobbying Disclosure Act of 1995 have made a lobbying contract on behalf of the offeror with respect to this contract, the offeror shall complete and submit, with its officer, OMB Standard Form LLL, Disclosure of Lobbying Activities, to provide the name of the registrants. The offeror need not report regularly employed officers or employees of the offeror to whom payments of reasonable compensation were made.

(e) Penalty. Submission of this certification and disclosure is a prerequisite for making or entering into this contract imposed by 31 USC 1352. Any persons who makes an expenditure prohibited under this provision or who fails to file or amend the disclosure required to be filed or amended by this provision, shall be subject to a civil penalty of not less than $10,000, and not more than $150,000, for each failure.

K.3 52.204-3 TAXPAYER IDENTIFICATION (OCT 1998)

(a) Definitions:

"Common parent", as used in this provision, means that corporate entity that owns or controls an affiliated group of corporations that files its Federal income tax returns on a consolidated basis, and of which the offeror is a member.

"Taxpayer Identification Number (TIN)", as used in this provision, means the number required by the IRS to be used by the offeror in reporting income tax and other returns. The TIN may be either a Social Security Number or an Employer Identification Number.

(b) All offerors must submit the information required in paragraphs (d) through (f) of this provision in order to comply with debt collection requirements of 31 U.S.C. 7701(c) and 3325 (d), reporting requirements of 26 USC 6041, 6041A, and 6050M and implementing regulations issued by the Internal Revenue Service (IRS). If the resulting contract is subject to the reporting requirements described in FAR 4.904, the failure or refusal by the offeror to furnish

the information may result in a 31 percent reduction of payments otherwise due under the contract.

(c) The TIN may be used by the Government to collect and report on any delinquent amounts arising out of the offeror's relationship with the Government (31 USC 7701(c)(3)). If the resulting contract is subject to the payment reporting requirements described in FAR 4.904, the TIN provided hereunder may be matched with IRS records to verify the accuracy of the offeror's TIN.

(d) Taxpayer Identification Number (TIN)

TIN:	
	TIN has been applied for
	TIN is not required because:
	Offeror is a nonresident alien, foreign corporation, or foreign partnership that does not have income effectively connected with the conduct of a trade or business in the U.S. and does not have an office or place of business or a fiscal paying agent in the U.S.
	Offeror is an agency or instrumentality of a foreign government
	Offeror is an agency or instrumentality of the Federal Government

(e) Type of Organization

	Sole Proprietorship
	Partnership
	Corporate Entity (not tax exempt)
	Corporate Entity (tax exempt)
	Government entity (Federal, State or local)
	Foreign Government
	International organization per 26 CFR 1.6049-4
	Other:

(f) Common Parent

	Offeror is not owned or controlled by a common parent as defined in paragraph (a) of this clause.
	Name and TIN of common parent
Name	
TIN	

K.4 52.204-8 ANNUAL REPRESENTATIONS AND CERTIFICATIONS (NOV 2014)

(a)(1) The North American Industry Classification System (NAICS) code for this acquisition is

- ***236118-Construction of Buildings/Residential Remodeling***

dredging to be considered small for purposes of Government procurement, a firm must perform at least 40% of the volume dredged with its own equipment or equipment owned by another small dredging concern.

(2) The small business size standard is **$36.5 million dollars.**
(3) The small business size standard for a concern which submits an offer in its own name, other than on a construction or service contract, but which proposes to furnish a product which it did not itself manufacture, is 500 employees.
(b)(1) If the provision at 52.204-7, System for Award Management, is included in this solicitation, paragraph (d) of this provision applies.
(2) If the provision at 52.204-7 is not included in this solicitation, and the offeror is currently registered in the System for Award Management (SAM), and has completed the Representations and Certifications section of SAM electronically, the offeror may choose to use paragraph (d) of this provision instead of completing the corresponding individual representations and certifications in the solicitation. The offeror shall indicate which option applies by checking one of the following boxes:
[ ] (i) Paragraph (d) applies.
[ ] (ii) Paragraph (d) does not apply and the offeror has completed the individual representations and certifications in the solicitation.
(c)(1) The following representations or certifications in SAM are applicable to this solicitation as indicated:
(i) 52.203-2, Certificate of Independent Price Determination. This provision applies to solicitations when a firm-fixed-price contract or fixed-price contract with economic price adjustment is contemplated, unless—
(A) The acquisition is to be made under the simplified acquisition procedures in Part 13;
(B) The solicitation is a request for technical proposals under two-step sealed bidding procedures; or
(C) The solicitation is for utility services for which rates are set by law or regulation.
(ii) 52.203-11, Certification and Disclosure Regarding Payments to Influence Certain Federal Transactions. This provision applies to solicitations expected to exceed $150,000.
(iii) 52.204-3, Taxpayer Identification. This provision applies to solicitations that do not include the provision at 52.204-7, System for Award Management.
(iv) 52.204-5, Women-Owned Business (Other Than Small Business). This provision applies to solicitations that—
(A) Are not set aside for small business concerns;
(B) Exceed the simplified acquisition threshold; and
(C) Are for contracts that will be performed in the United States or its outlying areas.
(v) 52.209-2, Prohibition on Contracting with Inverted Domestic Corporations—Representation. This provision applies to solicitations using funds appropriated in fiscal years 2008, 2009, 2010, or 2012.
(vi) 52.209-5, Certification Regarding Responsibility Matters. This provision applies to solicitations where the contract value is expected to exceed the simplified acquisition threshold.
(vii) 52.214-14, Place of Performance—Sealed Bidding. This provision applies to invitations for bids except those in which the place of performance is specified by the Government.
(viii) 52.215-6, Place of Performance. This provision applies to solicitations unless the place of performance is specified by the Government.
(ix) 52.219-1, Small Business Program Representations (Basic & Alternate I). This provision applies to solicitations when the contract will be performed in the United States or its outlying areas.
(A) The basic provision applies when the solicitations are issued by other than DoD, NASA, and

the Coast Guard.
(B) The provision with its Alternate I applies to solicitations issued by DoD, NASA, or the Coast Guard.
(x) 52.219-2, Equal Low Bids. This provision applies to solicitations when contracting by sealed bidding and the contract will be performed in the United States or its outlying areas.
(xi) 52.222-22, Previous Contracts and Compliance Reports. This provision applies to solicitations that include the clause at 52.222-26, Equal Opportunity.
(xii) 52.222-25, Affirmative Action Compliance. This provision applies to solicitations, other than those for construction, when the solicitation includes the clause at 52.222-26, Equal Opportunity.
(xiii) 52.222-38, Compliance with Veterans' Employment Reporting Requirements. This provision applies to solicitations when it is anticipated the contract award will exceed the simplified acquisition threshold and the contract is not for acquisition of commercial items.
(xiv) 52.223-1, Biobased Product Certification. This provision applies to solicitations that require the delivery or specify the use of USDA–designated items; or include the clause at 52.223-2, Affirmative Procurement of Biobased Products Under Service and Construction Contracts.
(xv) 52.223-4, Recovered Material Certification. This provision applies to solicitations that are for, or specify the use of, EPA–designated items.
(xvi) 52.225-2, Buy American Certificate. This provision applies to solicitations containing the clause at 52.225-1.
(xvii) 52.225-4, Buy American—Free Trade Agreements—Israeli Trade Act Certificate. (Basic, Alternates I, II, and III.) This provision applies to solicitations containing the clause at 52.225-3.
(A) If the acquisition value is less than $25,000, the basic provision applies.
(B) If the acquisition value is $25,000 or more but is less than $50,000, the provision with its Alternate I applies.
(C) If the acquisition value is $50,000 or more but is less than $79,507, the provision with its Alternate II applies.
(D) If the acquisition value is $79,507 or more but is less than $100,000, the provision with its Alternate III applies.
(xviii) 52.225-6, Trade Agreements Certificate. This provision applies to solicitations containing the clause at 52.225-5.
(xix) 52.225-20, Prohibition on Conducting Restricted Business Operations in Sudan—Certification. This provision applies to all solicitations.
(xx) 52.225-25, Prohibition on Contracting with Entities Engaging in Certain Activities or Transactions Relating to Iran-Representation and Certifications. This provision applies to all solicitations.
(xxi) 52.226-2, Historically Black College or University and Minority Institution Representation. This provision applies to solicitations for research, studies, supplies, or services of the type normally acquired from higher educational institutions.
(2) The following certifications are applicable as indicated by the Contracting Officer:
[*Contracting Officer check as appropriate.*]
__ (i) 52.204-17, Ownership or Control of Offeror.
__ (ii) 52.222-18, Certification Regarding Knowledge of Child Labor for Listed End Products.
__ (iii) 52.222-48, Exemption from Application of the Service Contract Labor Standards to Contracts for Maintenance, Calibration, or Repair of Certain Equipment- Certification.
__ (iv) 52.222-52, Exemption from Application of the Service Contract Labor Standards to

Contracts for Certain Services-Certification.
__ (v) 52.223-9, with its Alternate I, Estimate of Percentage of Recovered Material Content for EPA–Designated Products (Alternate I only).
__ (vi) 52.227-6, Royalty Information.
__ (A) Basic.
__(B) Alternate I.
__ (vii) 52.227-15, Representation of Limited Rights Data and Restricted Computer Software.
(d) The offeror has completed the annual representations and certifications electronically via the SAM website accessed through https://www.acquisition.gov. After reviewing the SAM database information, the offeror verifies by submission of the offer that the representations and certifications currently posted electronically that apply to this solicitation as indicated in paragraph (c) of this provision have been entered or updated within the last 12 months, are current, accurate, complete, and applicable to this solicitation (including the business size standard applicable to the NAICS code referenced for this solicitation), as of the date of this offer and are incorporated in this offer by reference (see FAR 4.1201); except for the changes identified below [*offeror to insert changes, identifying change by clause number, title, date*]. These amended representation(s) and/or certification(s) are also incorporated in this offer and are current, accurate, and complete as of the date of this offer.

FAR Clause #	Title	Date	Change
	_____	_____	_____

Any changes provided by the offeror are applicable to this solicitation only, and do not result in an update to the representations and certifications posted on SAM.

(End of provision)

K.5 52.209-2 PROHIBITION ON CONTRACTING WITH INVERTED DOMESTIC CORPORATIONS—REPRESENTATION (MAY 2011)

(a) *Definition*. "Inverted domestic corporation" and "subsidiary" have the meaning given in the clause of this contract entitled Prohibition on Contracting with Inverted Domestic Corporations (*52.209-10*).

(b) *Relation to Internal Revenue Code*. An inverted domestic corporation as herein defined does not meet the definition of an inverted domestic corporation as defined by the Internal Revenue Code at *26 U.S.C. 7874*.

(c) *Representation*. By submission of its offer, the offeror represents that—

(1) It is not an inverted domestic corporation; and

(2) It is not a subsidiary of an inverted domestic corporation.

(End of provision)

K.6 52.209-5 CERTIFICATION REGARDING RESPONSIBILITY MATTERS (APR 2010)

(a)(1) The Offeror certifies, to the best of its knowledge and belief, that—

(i) The Offeror and/or any of its Principals—

(A) Are *o* are not *o* presently debarred, suspended, proposed for debarment, or declared ineligible for the award of contracts by any Federal agency;

(B) Have *o* have not *o*, within a three-year period preceding this offer, been convicted of or had a civil judgment rendered against them for: commission of fraud or a criminal offense in connection with obtaining, attempting to obtain, or performing a public (Federal, State, or local) contract or subcontract; violation of Federal or State antitrust statutes relating to the submission of offers; or commission of embezzlement, theft, forgery, bribery, falsification or destruction of records, making false statements, tax evasion, violating Federal criminal tax laws, or receiving stolen property (if offeror checks "have", the offeror shall also see *52.209-7*, if included in this solicitation);

(C) Are *o* are not *o* presently indicted for, or otherwise criminally or civilly charged by a governmental entity with, commission of any of the offenses enumerated in paragraph (a)(1)(i)(B) of this provision;

(D) Have *o*, have not *o*, within a three-year period preceding this offer, been notified of any delinquent Federal taxes in an amount that exceeds $3,000 for which the liability remains unsatisfied.

(1) Federal taxes are considered delinquent if both of the following criteria apply:

(i) *The tax liability is finally determined*. The liability is finally determined if it has been assessed. A liability is not finally determined if there is a pending administrative or judicial challenge. In the case of a judicial challenge to the liability, the liability is not finally determined until all judicial appeal rights have been exhausted.

(ii) *The taxpayer is delinquent in making payment*. A taxpayer is delinquent if the taxpayer has failed to pay the tax liability when full payment was due and required. A taxpayer is not delinquent in cases where enforced collection action is precluded.

(2) *Examples*.

(i) The taxpayer has received a statutory notice of deficiency, under I.R.C. § 6212, which entitles the taxpayer to seek Tax Court review of a proposed tax deficiency. This is not a delinquent tax because it is not a final tax liability. Should the taxpayer seek Tax Court review, this will not be a final tax liability until the taxpayer has exercised all judicial appeal rights.

(ii) The IRS has filed a notice of Federal tax lien with respect to an assessed tax liability, and the taxpayer has been issued a notice under I.R.C. § 6320 entitling the taxpayer to request a hearing with the IRS Office of Appeals contesting the lien filing, and to further appeal to the Tax Court if the IRS determines to sustain the lien filing. In the course of the hearing, the taxpayer is entitled to contest the underlying tax liability because the taxpayer has had no prior opportunity to contest the liability. This is not a delinquent tax because it is not a final tax liability. Should the taxpayer seek tax court review, this will not be a final tax liability until the taxpayer has exercised all judicial appeal rights.

(iii) The taxpayer has entered into an installment agreement pursuant to I.R.C. § 6159. The taxpayer is making timely payments and is in full compliance with the agreement terms. The taxpayer is not delinquent because the taxpayer is not currently required to make full payment.

(iv) The taxpayer has filed for bankruptcy protection. The taxpayer is not delinquent because enforced collection action is stayed under 11 U.S.C. 362 (the Bankruptcy Code).

(ii) The Offeror has o has not o, within a three-year period preceding this offer, had one or more contracts terminated for default by any Federal agency.

(2) “Principal,” for the purposes of this certification, means an officer, director, owner, partner, or a person having primary management or supervisory responsibilities within a business entity (*e.g.*, general manager; plant manager; head of a division or business segment; and similar positions).

This Certification Concerns a Matter Within the Jurisdiction of an Agency of the United States and the Making of a False, Fictitious, or Fraudulent Certification May Render the Maker Subject to Prosecution Under Section 1001, Title 18, United States Code.

(b) The Offeror shall provide immediate written notice to the Contracting Officer if, at any time prior to contract award, the Offeror learns that its certification was erroneous when submitted or has become erroneous by reason of changed circumstances.

(c) A certification that any of the items in paragraph (a) of this provision exists will not necessarily result in withholding of an award under this solicitation. However, the certification will be considered in connection with a determination of the Offeror’s responsibility. Failure of the Offeror to furnish a certification or provide such additional information as requested by the Contracting Officer may render the Offeror non-responsible.

(d) Nothing contained in the foregoing shall be construed to require establishment of a system of records in order to render, in good faith, the certification required by paragraph (a) of this provision. The knowledge and information of an Offeror is not required to exceed that which is normally possessed by a prudent person in the ordinary course of business dealings.

(e) The certification in paragraph (a) of this provision is a material representation of fact upon which reliance was placed when making award. If it is later determined that the Offeror knowingly rendered an erroneous certification, in addition to other remedies available to the Government, the Contracting Officer may terminate the contract resulting from this solicitation for default.

(End of provision)

K.7. 52.225-18 PLACE OF MANUFACTURE (SEPT 2006)

(a) Definitions. As used in this clause—

" Manufactured end product" means any end product in Federal Supply Classes (FSC) 1000-9999, except—

(1) FSC 5510, Lumber and Related Basic Wood Materials;
(2) Federal Supply Group (FSG) 87, Agricultural Supplies;
(3) FSG 88, Live Animals;
(4) FSG 89, Food and Related Consumables;
(5) FSC 9410, Crude Grades of Plant Materials;
(6) FSC 9430, Miscellaneous Crude Animal Products, Inedible;
(7) FSC 9440, Miscellaneous Crude Agricultural and Forestry Products;
(8) FSC 9610, Ores;
(9) FSC 9620, Minerals, Natural and Synthetic; and
(10) FSC 9630, Additive Metal Materials.

"Place of manufacture" means the place where an end product is assembled out of components, or otherwise made or processed from raw materials into the finished product that is to be provided to the Government. If a product is disassembled and reassembled, the place of reassembly is not the place of manufacture.

(b) For statistical purposes only, the offeror shall indicate whether the place of manufacture of the end products it expects to provide in response to this solicitation is predominantly—

(1) [ ] In the United States (Check this box if the total anticipated price of offered end products manufactured in the United States exceeds the total anticipated price of offered end products manufactured outside the United States); or
(2) [ ] Outside the United States.

K.8 52.225-20 PROHIBITION ON CONDUCTING RESTRICTED BUSINESS OPERATIONS IN SUDAN—CERTIFICATION (AUG 2009)

(a) *Definitions*. As used in this provision—
"Business operations" means engaging in commerce in any form, including by acquiring, developing, maintaining, owning, selling, possessing, leasing, or operating equipment, facilities, personnel, products, services, personal property, real property, or any other apparatus of business or commerce.

"Marginalized populations of Sudan" means—
(1) Adversely affected groups in regions authorized to receive assistance under section 8(c) of the Darfur Peace and Accountability Act (Pub. L. 109-344) (*50 U.S.C. 1701 note*); and
(2) Marginalized areas in Northern Sudan described in section 4(9) of such Act.

"Restricted business operations" means business operations in Sudan that include power production activities, mineral extraction activities, oil-related activities, or the production of military equipment, as those terms are defined in the Sudan Accountability and Divestment Act of 2007 (Pub. L. 110-174). Restricted business operations do not include business operations that the person conducting the business can demonstrate—

(1) Are conducted under contract directly and exclusively with the regional government of southern Sudan;
(2) Are conducted pursuant to specific authorization from the Office of Foreign Assets Control in the Department of the Treasury, or are expressly exempted under Federal law from the requirement to be conducted under such authorization;
(3) Consist of providing goods or services to marginalized populations of Sudan;
(4) Consist of providing goods or services to an internationally recognized peacekeeping force or humanitarian organization;
(5) Consist of providing goods or services that are used only to promote health or education; or
(6) Have been voluntarily suspended.

(b) *Certification*. By submission of its offer, the offeror certifies that it does not conduct any restricted business operations in Sudan.

(End of provision)

K.9 AUTHORIZED CONTRACT ADMINISTRATOR

If the offeror does not fill-in the blanks below, the official who signed the offer will be deemed to be the offeror's representative for Contract Administration, which includes all matters pertaining to payments.

Name: _____

Address: _____

_____

Telephone No.: _____

K.10 652.225-70 ARAB LEAGUE BOYCOTT OF ISRAEL (AUG 1999)

(a) Definitions. As used in this provision:

"Foreign person" means any person other than a United States person as defined below.
"United States person" means any United States resident or national (other than an individual resident outside the United States and employed by other than a United States person), any domestic concern (including any permanent domestic establishment of any

foreign concern), and any foreign subsidiary or affiliate (including any permanent foreign establishment) of any domestic concern which is controlled in fact by such domestic concern, as provided under the Export Administration Act of 1979, as amended.

(b) Certification. By submitting this offer, the offeror certifies that it is not:

(1) Taking or knowingly agreeing to take any action, with respect to the boycott of Israel by Arab League countries, which Section 8(a) of the Export Administration Act of 1979, as amended (50 U.S.C. 2407(a)) prohibits a United States person from taking; or,

(2) Discriminating in the award of subcontracts on the basis of religion.

K.11 652.228-70 DEFENSE BASE ACT – COVERED CONTRACTOR EMPLOYEES (JUN 2006)

(a) Bidders/offerors shall indicate below whether or not any of the following categories of employees will be employed on the resultant contract, and, if so, the number of such employees:

Category	Yes/No	Number
(1) United States citizens or residents		
(2) Individuals hired in the United States, regardless of citizenship		
(3) Local nationals or third country nationals where contract performance takes place in a country where there are no local worker's compensation laws		Local Nationals: Third Country Nationals:
(4) Local nationals or third country nationals where performance takes place in a country where there are local worker's compensation laws		Local Nationals: Third Country Nationals:

(b) The Contracting Officer has determined that for performance in the country of the Republic of ***Zambia***

☐ × Workers' compensation laws exist that will cover local nationals and third country nationals.

☐ Workers' compensation laws do not exist that will cover local nationals and third country nationals.

(c) If the bidder/offeror has indicated "yes" in block (a)(4) of this provision, the bidder/offeror shall not purchase Defense Base Act insurance for those employees. However, the bidder/offeror shall assume liability toward the employees and their beneficiaries for war-hazard injury, death, capture, or detention, in accordance with the clause at FAR 52.228-4.

(d) RESERVED

(End of provision)

The following DOSAR is provided in full text:

652.209-79 REPRESENTATION BY CORPORATION REGARDING AN UNPAID DELINQUENT TAX LIABILITY OR A FELONY CRIMINAL CONVICTION UNDER ANY FEDERAL LAW (SEPT 2014) (DEVIATION per PIB 2014-21)

(a) In accordance with section 7073 of Division K of the Consolidated Appropriations Act, 2014 (Public Law 113-76) none of the funds made available by that Act may be used to enter into a contract with any corporation that –

(1) Was convicted of a felony criminal violation under any Federal law within the preceding 24 months, where the awarding agency has direct knowledge of the conviction, unless the agency has considered, in accordance with its procedures, that this further action is not necessary to protect the interests of the Government; or

(2) Has any unpaid Federal tax liability that has been assessed for which all judicial and administrative remedies have been exhausted or have lapsed, and that is not being paid in a timely manner pursuant to an agreement with the authority responsible for collecting the tax liability, where the awarding agency has direct knowledge of the unpaid tax liability, unless the Federal agency has considered, in accordance with its procedures, that this further action is not necessary to protect the interests of the Government.

For the purposes of section 7073, it is the Department of State's policy that no award may be made to any corporation covered by (1) or (2) above, unless the Procurement Executive has made a written determination that suspension or debarment is not necessary to protect the interests of the Government.

(b) Offeror represents that—

(1) It is [ ] is not [ ] a corporation that was convicted of a felony criminal violation under a Federal law within the preceding 24 months.

(2) It is [ ] is not [ ] a corporation that has any unpaid Federal tax liability that has been assessed for which all judicial and administrative remedies have been exhausted or have lapsed, and that is not being paid in a timely manner pursuant to an agreement with the authority responsible for collecting the tax liability.

(End of provision)

SECTION L - INSTRUCTIONS, CONDITIONS, AND NOTICES
TO OFFERORS OR QUOTERS

L.1 52.252-1 SOLICITATION PROVISIONS INCORPORATED BY REFERENCE (FEB 1998)

This contract incorporates the following provisions by reference, with the same force and effect as if they were given in full text. Upon request, the Contracting Officer will make their full text available. The offeror is cautioned that the listed provisions may include blocks that must be completed by the offeror and submitted with its quotation or offer. In lieu of submitting the full text of those provisions, the offeror may identify the provision by paragraph identifier and provide the appropriate information with its quotation or offer. Also, the full text of a solicitation provision may be accessed electronically at: *http://acquisition.gov/far/index.html/* or *http://farsite.hill.af.mil/vffara.htm*. These addresses are subject to change.

If the Federal Acquisition Regulation (FAR) is not available at the locations indicated above, use of the Department of State Acquisition website at *http://www.statebuy.state.gov/* or an Internet "search engine" (for example, Google, Yahoo or Excite) is suggested to obtain the latest location of the most current FAR.

The following Federal Acquisition Regulation provision(s) is/are incorporated by reference (48 CFR CH. 1):

PROVISIONS	TITLE AND DATE
52.204-7	SYSTEM FOR AWARD MANAGEMENT (JULY 2013)
52.204-16	COMMERCIAL AND GOVERNMENT ENTITY CODE REPORTING (NOV 2014)
52.209-7	INFORMATION REGARDING RESPONSIBILITY MATTERS (JULY 2013)
52.214-34	SUBMISSION OF OFFERS IN THE ENGLISH LANGUAGE (APR 1991)
52.215-1	INSTRUCTIONS TO OFFERORS–COMPETITIVE ACQUISITION (JAN 2004)
52.236-28	PREPARATION OF PROPOSALS – CONSTRUCTION (OCT 1997)

L.2 SOLICITATION PROVISIONS IN FULL TEXT

52.216-1 TYPE OF CONTRACT (APR 1984)

The Government contemplates award of a **Fixed Price Contract** resulting from this solicitation.

(End of provision)

52.233-2 SERVICE OF PROTEST (SEPT 2006)

(a) Protests, as defined in section 33.101 of the Federal Acquisition Regulation, that are filed directly with an agency, and copies of any protests that are filed with the General Accounting Office (GAO), shall be served on the Contracting Officer (addressed as follows) by obtaining written and dated acknowledgment of receipt from U.S. Embassy Lusaka, Stand 694 / Lot 100, Ibex Hill Road, Lusaka, Zambia. Post Code: 10101.

(b) The copy of any protest shall be received in the office designated above within one day of filing a protest with the GAO.

(End of provision)

L.3 QUALIFICATIONS OF OFFERORS

Offerors must be technically qualified and financially responsible to perform the work described in this solicitation. At a minimum, each Offeror must meet the following requirements:

(1) Be able to understand written and spoken English;

(2) Have an established business with a permanent address and telephone listing;

(3) Be able to demonstrate prior construction experience with suitable references for company and Project manager;

(4) List of clients over the past _____3____ years, demonstrating prior experience with relevant past performance information and references (provide dates of contracts, places of performance, value of contracts, contact names, telephone and fax numbers and email addresses). If the offeror has not performed comparable services in The Republic of Zambia, then the offeror shall provide its international experience. Offerors are advised that the past performance information requested above may be discussed with the client's contact person. In addition, the client's contact person may be asked to comment on the offeror's:

- Quality of services provided under the contract;
- Compliance with contract terms and conditions;
- Effectiveness of management;
- Willingness to cooperate with and assist the customer in routine matters, and when confronted by unexpected difficulties; and
- Business integrity / business conduct. The Government will use past performance information primarily to assess an offeror's capability to meet the solicitation performance requirements, including the relevance and successful performance of the offeror's work experience. The Government may also use this data to

evaluate the credibility of the offeror's proposal. In addition, the Contracting Officer may use past performance information in making a determination of responsibility.

(5) Evidence that the offeror/quoter can provide the necessary personnel, equipment, and financial resources needed to perform the work;

(6) The offeror shall address its plan to obtain all licenses and permits required by local law (see DOSAR 652.242-73 in Section 2). If offeror already possesses the locally required licenses and permits, a copy shall be provided.

(7) The offeror's strategic plan for **Reconstruction of Perimeter Wall at 55 Kabulonga Road** services to include but not limited to:

(a) A work plan taking into account all work elements in Section 1, Performance Work Statement.

(b) Identify types and quantities of equipment, supplies and materials required for performance of services under this contract. Identify if the offeror already possesses the listed items and their condition for suitability and if not already possessed or inadequate for use how and when the items will be obtained;

(c) Plan of ensuring quality of services including but not limited to contract administration and oversight; and

(d) (1) if insurance is required by the solicitation, a copy of the Certificate of Insurance(s), **or** (2) a statement that the Contractor will get the required insurance, and the name of the insurance provider to be used.

(8) Have the ability to obtain a performance and guarantee bond and a payment bond, or to post adequate performance security, such as irrevocable letters of credit or guarantees issued by a reputable financial institution;

(9) Have no adverse criminal record; and

(10) Have no political or business affiliation which could be considered contrary to the interests of the United States.

L.4 <u>REVIEW OF DOCUMENTS</u>

Each Offeror is responsible for:

(1) Obtaining a complete set of contract drawings and specifications;

(2) Thoroughly reviewing such documents and understanding their requirements;

(3) Visiting the project site and becoming familiar with all working conditions, local laws and regulations; and

(4) Determining that all materials, equipment and labor required for the work are available.

Any ambiguity in the solicitation, including specifications and contract drawings, must be reported immediately to the Contracting Officer. Any prospective Offeror who requires a clarification, explanation or interpretation of the contract requirements must make a request to the Contracting Officer not less than ten working days before the closing date of the solicitation. Offerors may rely ONLY upon written interpretations by the Contracting Officer.

L.5 SUBMISSION OF OFFERS

L.5.1 SUMMARY OF INSTRUCTIONS

Each offer shall consist of the following physically separate volumes:

Volume	Title	No. of Copies*
I	Executed Standard Form 1442, *Solicitation, Offer and Award (Construction, Alteration, or Repair)*, and completed Section K	2
II	Price Proposal and Completed Section B. The price proposal shall include a completed Section J, Attachment 4, "Breakdown of Proposal Price by Divisions of Specifications".	2
III	Performance schedule in the form of a "bar chart" and Business Management/Technical Proposal.	2

Submit the complete offer to the address indicated at Block 7 of Standard Form (SF) 1442, if mailed, or if hand-delivered, the address set forth below (if this is left blank, the address is the same as that in Block 7 of SF-1442):

_____
_____
_____
_____

The offeror shall identify and explain/justify any deviations, exceptions, or conditional assumptions taken with respect to any of the instructions or requirements of this solicitation in the appropriate volume of the offer.

One (1) original and one (1) copy.

L.5.2 DETAILED INSTRUCTIONS

L.5.2.1 Volume I: Standard Form (SF) 1442 and Section K. Complete blocks 14 through 20C of the SF-1442 and all of Section K.

L.5.2.2 Volume II: Price proposal and Section B. The price proposal shall consist of completion of Section B and Section J, Attachment 4, "BREAKDOWN OF PROPOSAL PRICE BY BILL OF QUANTITIES. Complete all applicable portions of this form in each relevant category (such as., labor, materials, etc.).

L.5.2.3 Volume III: Performance schedule and Business Management/Technical Proposal.

(a) Present the performance schedule in the form of a "bar chart" indicating when the various portions of the work will be commenced and completed within the required contract completion schedule. This bar chart shall be in sufficient detail to clearly show each segregable portion of work and its planned commencement and completion date.

(b) The Business Management/Technical Proposal shall be in two parts, including the following information:

PROPOSED WORK INFORMATION - Provide the following:

(1) A list of the names, addresses and telephone numbers of the owners, partners, and principal officers of the Offeror;
(2) The name and address of the Offeror's field superintendent for this project; and
(3) A list of the names, addresses, and telephone numbers of subcontractors and principal materials suppliers to be used on the project, indicating what portions of the work will be performed by them.

EXPERIENCE AND PAST PERFORMANCE - List all contracts and subcontracts your company has held over the past three years for the same or similar work. Provide the following information for each contract and subcontract:

(1) Customer's name, address, and telephone numbers of customer's lead contract and technical personnel;
(2) Contract number and type;
(3) Date of the contract award place(s) of performance, and completion dates;
(4) Contract dollar value;
(5) Brief description of the work, including responsibilities;
(6) Comparability to the work under this solicitation;
(7) Brief discussion of any major technical problems and their resolution;
(8) Method of acquisition (fully competitive, partially competitive, or noncompetitive), and the basis for award (cost/price, technical merit, etc.);
(9) Cost/price management history, including any cost overruns and under runs, and cost growth and changes;
(10) Percent turnover of contract key technical personnel per year; and
(11) Any terminations (partial or complete) and the reason (convenience or default)
(12) Identify any accidents or safety concerns that occurred and resolution.

L.6 52.236-27 SITE VISIT (FEB 1995)

(a) The clauses at 52.236-2, Differing Site Conditions, and 52.236-3, Site Investigations and Conditions Affecting the Work, will be included in any contract awarded as a result of this solicitation. Accordingly, offerors or quoters are urged and expected to inspect the site where the work will be performed.

(b) **A site visit has been scheduled for Wednesday September 09, 2015 at 14:30hrs.**

(c) **Participants will meet at 55 Kabulonga Road, Lusaka Zambia.**

L.7 652.206-70 COMPETITION ADVOCATE/OMBUDSMAN (AUG 1999) (DEVIATION)

(a) The Department of State's Competition Advocate is responsible for assisting industry in removing restrictive requirements from Department of State solicitations and removing barriers to full and open competition and use of commercial items. If such a solicitation is considered competitively restrictive or does not appear properly conducive to competition and commercial practices, potential offerors are encouraged to first contact the contracting office for the respective solicitation.

If concerns remain unresolved, contact the Department of State Competition Advocate on (703) 516-1696, by fax at (703) 875-6155, or by writing to:

Competition Advocate
U.S. Department of State
A/OPE
SA-15, Room 1060
Washington, DC 20522-1510.

(b) The Department of State's Acquisition Ombudsman has been appointed to hear concerns from potential offerors and contractors during the pre-award and post-award phases of this acquisition. The role of the ombudsman is not to diminish the authority of the Contracting Officer, the Technical Evaluation Panel or Source Evaluation Board, or the selection official. The purpose of the ombudsman is to facilitate the communication of concerns, issues, disagreements, and recommendations of interested parties to the appropriate Government personnel, and work to resolve them. When requested, and appropriate, the ombudsman will maintain strict confidentiality as to the source of the concern. The ombudsman does not participate in the evaluation of proposals, the source selection process, or the adjudication of formal contract disputes.

Interested parties are invited to contact the contracting activity ombudsman, **William J. McClure, Phone No. *026 0211 357000*, Fax No. 026 0211 357224**. For a U.S. Embassy or overseas post, refer to the numbers below for the Department Acquisition Ombudsman.

Concerns, issues, disagreements, and recommendations which cannot be resolved at a contracting activity level may be referred to the Department of State Acquisition Ombudsman at (703) 516-1696, by fax at (703) 875-6155, or by writing to:

Acquisition Ombudsman
U.S. Department of State
A/OPE
SA-15, Room 1060
Washington, DC 20522-1510.

(End of provision)

L.8 MAGNITUDE OF CONSTRUCTION PROJECT

It is anticipated that the range in price of this contract will be: **Between $100,000 and $200,000.**

L.9 FINANCIAL STATEMENT

If asked by the Contracting Officer, the offeror shall provide a current statement of its financial condition, certified by a third party, that includes:

Income (profit-loss) Statement that shows profitability for the past **3** years;

Balance Sheet that shows the assets owned and the claims against those assets, or what a firm owns and what it owes; and

Cash Flow Statement that shows the firm's sources and uses of cash during the most recent accounting period. This will help the Government assess a firm's ability to pay its obligations.

The Government will use this information to determine the offeror's financial responsibility and ability to perform under the contract. Failure of an offeror to comply with a request for this information may cause the Government to determine the offeror to be nonresponsible.

SECTION M - EVALUATION FACTORS FOR AWARD

M.1 EVALUATION OF PROPOSALS

M.1.1 GENERAL. To be acceptable and eligible for evaluation, proposals must be prepared in accordance with Section L - INSTRUCTIONS, CONDITIONS AND NOTICES TO OFFERORS, and must meet all the requirements set forth in the other sections of this solicitation.

M.1.2 BASIS FOR AWARD

The Government intends to award a contract resulting from this solicitation to the lowest priced, technically acceptable offeror who is a responsible contractor. The evaluation procedures are set forth below:

(a) INITIAL EVALUATION. The Government will evaluate all proposals received to ensure that each proposal is complete in terms of submission of each required volume, as specified in Section L. The Government may reject proposals which are missing a significant amount of the required information.

(b) TECHNICAL EVALUATION. After the Initial Evaluation, the Government will review those proposals remaining for consideration to determine technical acceptability. The Government will consider the following evaluation criteria in determining the acceptability of the technical proposal. To be considered technically acceptable, the technical proposal must provide the information requested in Section L and conform to the requirements of the solicitation.

- The Proposed Work Information described in L.5.2.3(b).
- The qualifications and experience of the offeror's proposed project superintendent and subcontractors.
- Experience and Past Performance (L.5.2.3.(b)). The Government may contact references to verify the quality of the past performance.
- The performance schedule (bar chart) (Section L.5.2.3.).
- Responses to all other technical requirements contained in the solicitation.

(c) The Government will make a responsibility determination by analyzing whether the apparent successful offeror complies with the requirements of FAR 9.1, including:

- adequate financial resources or the ability to obtain them; bank statements or overdraft facilities NOT financial statements

- evidence of business registration, ZRA compliancy and workman compensation and established business premises

- necessary organization, experience, and skills or the ability to obtain them;
- necessary equipment and facilities or the ability to obtain them; and
- power of attorney for the authorized signatory
- National Council For Construction(NCC) Grade 6 or better
- demonstrated experience and competence in Reinforced Concrete masonry unit construction works, i.e. name of the project, client, value , when completed project description and contact details if the client.
- Site manager with a minimum of diploma in a relevant construction discipline plus five years relevant experience and registered with the Engineering institution of Zambia
- Satisfactory construction schedule and logical sequence of activities

The Government reserves the right to reject proposals that are unreasonably low or high in price. Unsuccessful offerors will be notified in accordance with FAR 15.5.

M.1.3 AWARD SELECTION

The Government will review the prices of all technically acceptable firms and award the contract to the lowest priced, technically acceptable, responsible offeror.

M.2 AWARD WITHOUT DISCUSSIONS

Under FAR provision 52.215-1 (included in Section L of this RFP), award of this contract may be made based on initial proposals and without holding discussions, following FAR 15.306(a)(3).

M.3 52.225-17 EVALUATION OF FOREIGN CURRENCY OFFERS (FEB 2000):

If the Government receives offers in more than one currency, the Government will evaluate offers by converting the foreign currency to United States currency using the exchange rate used by the Embassy in effect as follows:

(a) For acquisitions conducted using sealed bidding procedures, on the date of bid opening.

(b) For acquisitions conducted using negotiation procedures—

(1) On the date specified for receipt of offers, if award is based on initial

offers; otherwise

(2) On the date specified for receipt of proposal revisions.

M.4 SEPARATE CHARGES

Separate charges, in any form, are not solicited. For example, any charges for failure to exercise an option are unacceptable.