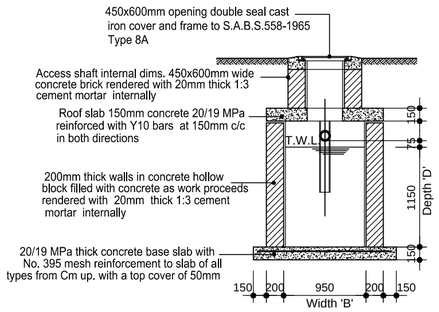

CROSS SECTION THROUGH TANK TYPE Bm

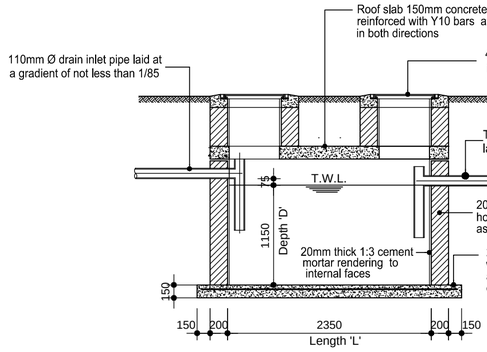

LONGITUDINAL SECTION THROUGH TANK TYPE Bm

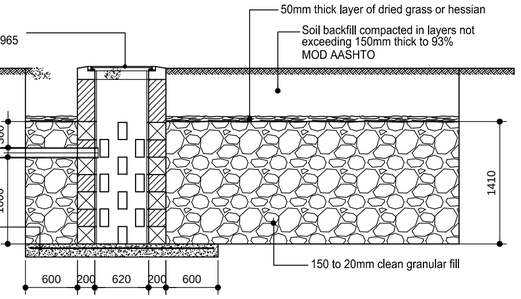

DISTRIBUTION CHAMBER AND SOAKAWAY TRENCH

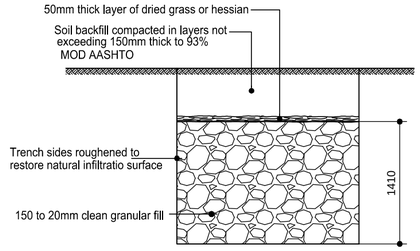

CROSS SECTION THROUGH SOAK AWAY TRENCH

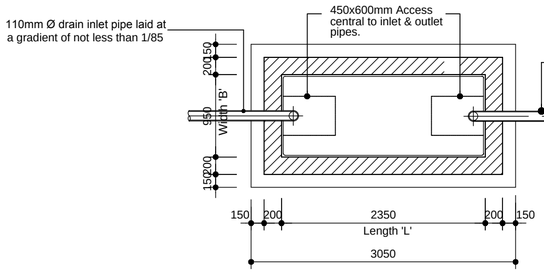

SEPTIC TANK LAYOUT

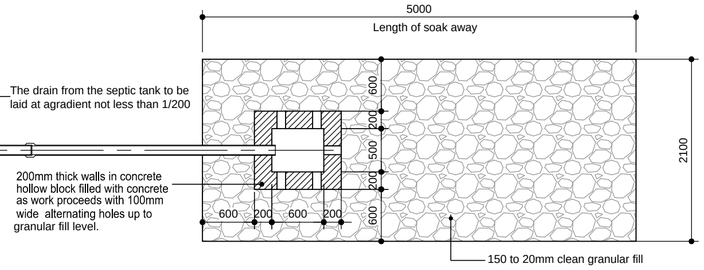

DISTRIBUTION CHAMBER AND SOAKAWAY TRENCH

GENERAL NOTES:

1. FIGURED DIMENSIONS ON DRAWINGS TO BE GIVEN PRIORITY OVER SCALING.
2. ANY OMMISIONS, DISCREPANCIES OR ERRORS TO BE IMMEDIATELY REPORTED TO THE PROJECT MANAGER.
3. CONTRACTOR TO CHECK AND VERIFY SUFFICIENCY OF INFORMATION SHOWN ON THE DRAWING AND DIMENSIONS BEFORE COMMENCING WORK.
   SHOULD THE CONTRACTOR PROCEED WITHOUT THE ABOVE APPROVALS HE DOES SO ENTIRELY AT HIS OWN RISK.

STRUCTURAL NOTES

1. ALL CONCRETE TO BE GRADE 25/19.
2. ALL REINFORCEMENTS TO BE HIGH TENSILE STEEL WITH A MINIMUM YIELD STRENGTH OF 450 MPa. EXCEPT LINKS; TO BE MILD STEEL 250MPa YIELD STRENGTH
3. SOLID CONCRETE BLOCKS TO HAVE MINIMUM 10 MPa. COMPRESSIVE STRENGTH.
4. ALL BLOCK WORK TO BE WET PRIOR TO PLACEMENT OF CONCRETE.
5. MINIMUM COVER TO REINFORCEMENT TO BE 30mm

Percolation Rate : Test to determine the absorption rate of the soil

1. Excavate a test hole to the depth of the proposed soakaway trench by hand or by auger with a diameter of between 100mm and 300mm. In order to record results accurately it will be necessary to dig a pit below pipe invert level prior to taking out the test hole. Remove all loose material from bottom of hole and replace with 50mm layer of gravel to prevent scour when filling with water.
2. Fill the test hole with water to depth of 300mm and maintain this level by the addition of more water for at least 4 hours before carrying out the test.
3. After allowing the 'soaking' water to percolate away, fill the test hole to depth of 150mm with water and measure the drop in water level over a period of 30 minutes or until water has drained.
4. The average time for the water to drop 25mm is calculated and represents the percolation rate expressed in minutes per 25mm.

Note:

Length of soakaway trench based on 1m depth below invert. If this depth is not possible due to local conditions the length of trench should be varied accordingly to give the equivalent trench sidewall area.

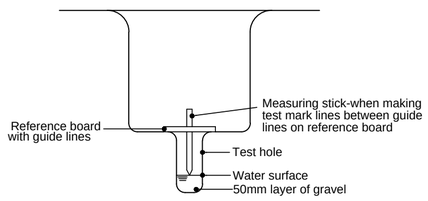

METHOD OF MEASURING ABSORPTION

SEPTIC TANK						LENGTH OF SOAKAWAY (see note below)						
Type	No. of Persons	Depth 'D'	Width 'B'	Length 'L'	Capacity 'm'	Percolation Rate-Minutes per 25mm						Type
						1 or less	5mins.	10mins.	15mins.	30mins.	60mins.	
Am	1 - 5	1.15	0.95	1.90	2.05	5.00	5.00	5.00	7.50	10.00	15.00	Am
Bm	6 - 10	1.15	0.95	2.35	2.55	5.00	7.50	10.00	15.00	20.00	30.00	Bm
Cm	11 - 15	1.15	0.95	3.75	3.55	7.50	11.25	15.00	22.50	30.00	45.00	Cm
Dm	16-20	1.15	0.95	4.25	4.60	10.00	15.00	20.00	30.00	40.00	60.00	Dm
Em	21- 25	1.10	0.95	4.70	5.75	12.50	18.75	25.00	37.50	50.00	70.00	Em
Fm	26-30	1.35	0.95	5.20	6.70	15.00	22.50	30.00	45.00	60.00	90.00	Fm
Gm	31-35	1.15	1.40	4.70	7.50	17.50	26.25	35.00	52.50	70.00	105.00	Gm
Hm	36-40	1.25	1.40	4.70	8.15	20.00	30.00	40.00	60.00	80.00	120.00	Hm
Jm	41-50	1.30	1.40	5.65	10.30	25.00	37.50	50.00	75.00	100.00	150.00	Jm
Km	51-60	1.50	1.40	5.65	11.90	30.00	45.00	60.00	90.00	120.00	180.00	Km
Lm	61-70	1.75	1.40	6.10	13.65	35.00	52.25	70.00	105.00	140.00	210.00	Lm

REFERENCE DRAWINGS

DRAWING No.	TITLE

No.	DATE	AMENDMENTS	APPROVED

REVISIONS

PROJECT DESCRIPTION:

PROPOSED GUARD HOUSE
ON PLOT No.4936 LUKULU ROAD
SUNNINGDALE
LUSAKA

DRAWING TITLE:

SEPTIC TANK Bm LAYOUT
AND CONSTRUCTION DETAILS

DESIGNED: W.SIKANA SCALE: 1:50
DRAWN: S.G.MAMBWE DATE: MARCH , 2015
CHECKED: W.SIKANA JOB No.:
DRG.No.: GH-03

REVISIONS: A B C D E F G