STONE TYPES

ST-1 – BLACK LABRADOR, POLISHED

TYPES	NUMBER	HEIGHT, MM	WIDTH, MM	QUANTITY
ST-1	N1	740	710	9
ST-1	N2	990	425	4
ST-1	N3	290	425	2

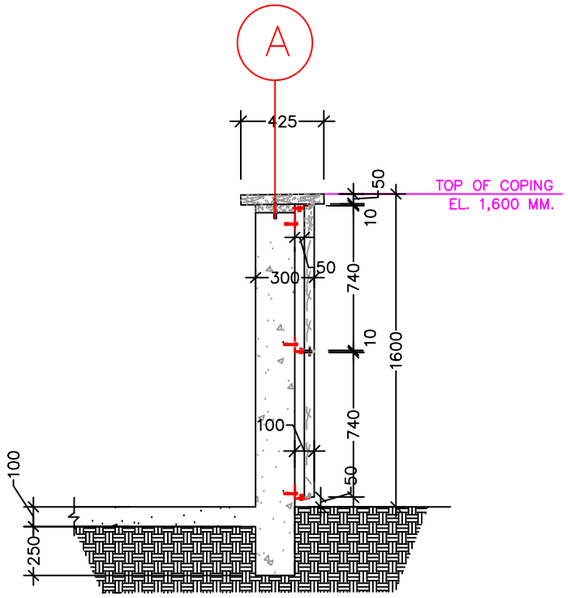

1 EAST WALL SECTION

1=30

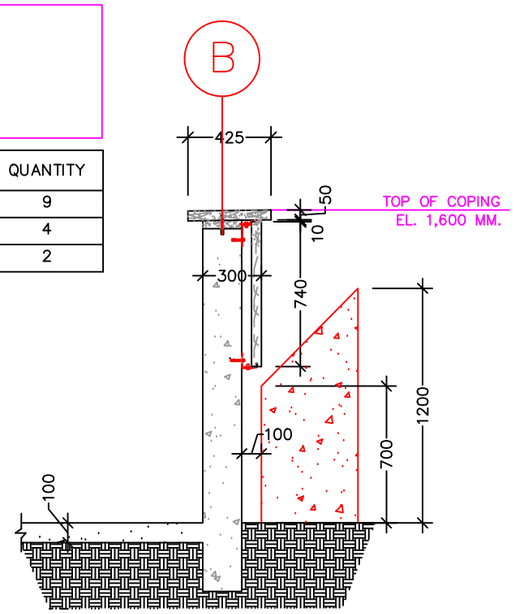

2 WEST WALL SECTION

1=30

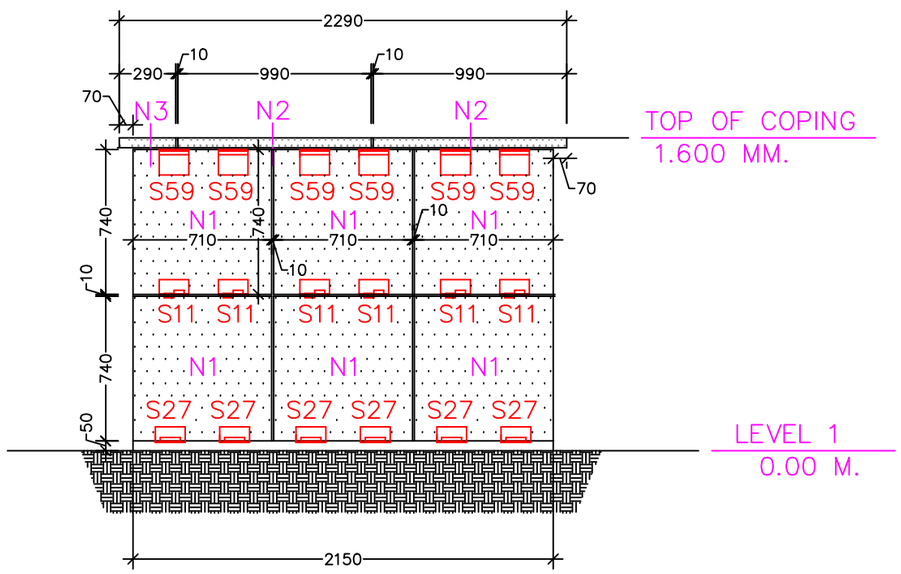

A EAST ELEVATION

1=30

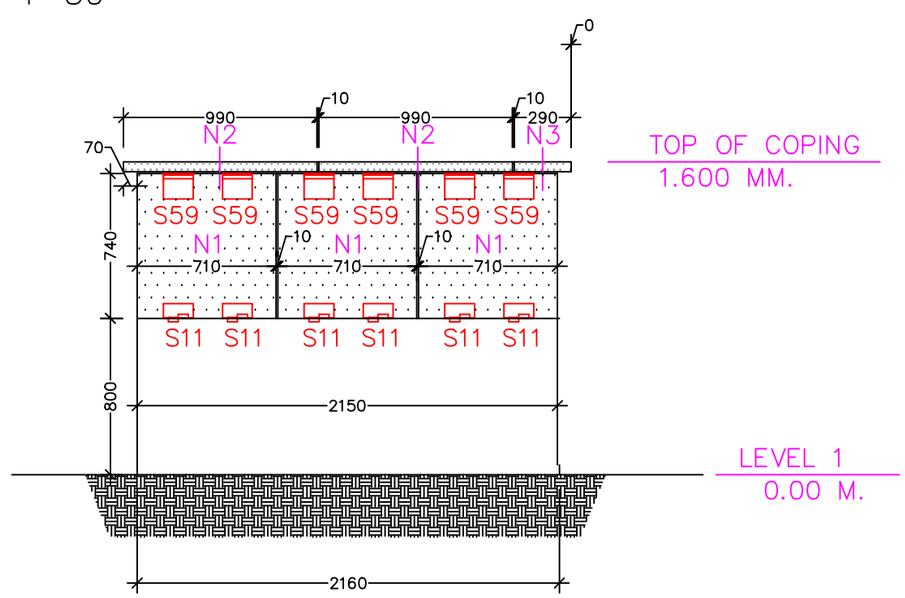

B WEST ELEVATION

1=30

Trash Enclosure Walls

ISSUE	REMARK	DATE
1		7-25-2016

PROJECT DESCRIPTION
NEW EMBASSY COMPOUND
KYIV, UKRAINE
A.S.I. #

DRAWN BY O.L.K
CHECKED BY
CONTRACTORS

SHEET NUMBER
2