SOLICITATION
for RENEWING ODC BOILER PIPES
(STU150-13-Q-3034, PR2628029)

TABLE OF CONTENTS

DESCRIPTION	NO. of PAGES
Table of Contents	1 pg.
Solicitation	30 pgs.

SF 1442
A. Price
B. Scope of Work
C. Packaging and Marking
D. Inspection and Acceptance
E. Deliveries/Performance
F. Administrative Data
G. Special Requirements
H. Clauses
I. List of Attachments
J. Quotation Information
K. Evaluation Criteria
L. Representations, Certifications, and other Statements of Offerors or Quoters

Attachments:

Attachment 1	Statement of Work with drawing	5 pgs.
Attachment 2	Sample Bank Letter of Guaranty	1 pg.
Attachment 3	Breakdown of Price by Divisions of Specifications	1 pg.
Attachment 4	List of Holidays	1 pg.

SOLICITATION, OFFER, AND AWARD *(Construction, Alteration, or Repair)* **SF1442**	1. SOLICITATION NO. **STU150-13-Q-3034**	2. TYPE OF SOLICITATION ☐ SEALED BID (IFB) [x] NEGOTIATED (RFP)	3. DATE ISSUED 07/29/13	PAGE OF PAGES 2 / 39

IMPORTANT - The "offer" section on the reverse must be fully completed by offeror.

4. CONTRACT NO.	5. REQUISITION/PURCHASE REQUEST NO. **PR2628029**	6. PROJECT NO.

7. ISSUED BY CODE AMERICAN EMBASSY Ataturk Bul No. 110, K.Dere, Ankara	8. ADDRESS OFFER TO AMERICAN EMBASSY Ataturk Bul no.110, K.Dere, Ankara

9. FOR INFORMATION CALL:	A. NAME Sezin Colak, Glenn Lewis	B. TELEPHONE NO. *(Include area code)* ***(NO COLLECT CALLS)*** 455-5555 ext. 7350 or 7464

SOLICITATION

NOTE: In sealed bid solicitations "offer" and "offeror" mean "bid" and "bidder."

10. THE GOVERNMENT REQUIRES PERFORMANCE OF THE WORK DESCRIBED IN THESE DOCUMENTS *(Title, identifying no., date):*

PROJECT for

RENEWING BOILER TUBES OF THE HEATING BOILERS

11. The Contractor shall begin performance within **_10_** calendar days and complete it within _the approved number of_ calendar days after receiving the notice to proceed. This performance period is mandatory after award.

12A. THE CONTRACTOR MUST FURNISH ANY REQUIRED PERFORMANCE AND PAYMENT BONDS? X☐ YES ☐ NO	12B. CALENDAR DAYS 5 days

13. ADDITIONAL SOLICITATION REQUIREMENTS:

1) A. Sealed offers in original and 2 copies to perform the work required are due at the place specified in Item 8 by 10:00 (hour) local time **08/16/13** for the offer.

If this is a sealed bid solicitation, offers must be publicly opened at that time. Sealed envelopes containing offers shall be marked to show the offeror's name and address, the solicitation number, and the date and time offers are due.

B. An offer guarantee ☐ is, X☐ is not required.

C. All offers are subject to the (1) work requirements, and (2) other provisions and clauses incorporated in the solicitation in full text or by reference.

D. Offers providing less than __30___ calendar days for Government acceptance after the date offers are due will not be considered and will be rejected.

OFFER *(Must be fully completed by offeror)*

14. NAME AND ADDRESS OF OFFEROR *(Include ZIP Code)*	15. TELEPHONE NO. *(Include area code)* Tel.: ; Fax:
	16. REMITTANCE ADDRESS *(Include only if different than Item 14)*
CODE FACILITY CODE	

17. The offeror agrees to perform the work at the prices specified below in strict accordance with the terms of this solicitation, if this offer is accepted by the Government within an approved no. of calendar days after the date offers are due.

AMOUNTS

18. The offeror agrees to furnish any required performance and payment bonds.

19. ACKNOWLEDGMENT OF AMENDMENTS

The offeror acknowledges receipt of amendments to the solicitation -- give number and date of each

AMENDMENT										
DATE										

NAME AND TITLE OF PERSON AUTHORIZED TO SIGN OFFER *(Type or print)*	20B. SIGNATURE	20C. OFFER DATE

AWARD *(To be completed by Government)*

21. ITEMS ACCEPTED:
all items

22. AMOUNT	23. ACCOUNTING AND APPROPRIATION DATA	
24. SUBMIT INVOICES TO ADDRESS SHOWN IN *(3 copies unless otherwise specified)*	ITEM	25. OTHER THAN FULL AND OPEN COMPETITION PURSUANT TO ☐ 10 U.S.C. 2304(c)( ) ☐ 41 U.S.C. 253(c)( )
26. ADMINISTERED BY CODE	27. PAYMENT WILL BE MADE BY	

CONTRACTING OFFICER WILL COMPLETE ITEM 28 OR 29 AS APPLICABLE

☐ 28. NEGOTIATED AGREEMENT (Contractor is required to sign this document and return 2 copies to issuing office) Contractor agrees to furnish and deliver all items or perform all work, requisitions identified on this form and any continuation sheets for the consideration slated in this contract. The rights and obligations of the parties to this contract shall be governed by (a) this contract award, (b) the solicitation, and (c) the clauses, representations, certifications, and specifications or incorporated by reference in or attached to this contract.	☐ 29. AWARD Your offer on this solicitation is hereby accepted as to the items listed. This award consummates the contract, which consists of (a) the Government solicitation and your offer, and (b) this contract award. No further contractual document is necessary.
30A. NAME AND TITLE OF CONTRACTOR OR PERSON AUTHORIZED TO SIGN *(Type or print)*	31A. NAME OF CONTRACTING OFFICER *(Type or print)* **GLENN K. LEWIS**

30B. SIGNATURE	30C. DATE	31B. UNITED STATES OF AMERICA BY	31C. AWARD DATE

REQUEST FOR QUOTATIONS - CONSTRUCTION

A. PRICE

The contractor shall complete all work, including furnishing all labor, material, equipment and services required under this purchase order for the following firm fixed price and within the time specified. This price shall include all labor, materials, overhead and profit.

_____ Total Price

B. SCOPE OF WORK

The character and scope of the work are set forth in the contract. The Contractor shall furnish and install all materials required by this contract.

In case of differences between small and large-scale drawings, the latter will govern. Where a portion of the work is drawn in detail and the remainder of the work is indicated in outline, the parts drawn in detail shall apply also to all other portions of the work.

C. PACKAGING AND MARKING

Mark materials delivered to the site as follows:

U.S. EMBASSY in ANKARA
13-C-3034 (RENEWING ODC BOLIER PIPES)
Inonu Bul. No. 94, Ankara

D. INSPECTION AND ACCEPTANCE

The COR, or his/her authorized representatives, will inspect from time to time the services being performed and the supplies furnished to determine whether work is being performed in a satisfactory manner, and that all supplies are of acceptable quality and standards.

The Contractor shall be responsible for any countermeasures or corrective action, within the scope of this contract, which may be required by the Contracting Officer as a result of such inspection.

D.1 *Substantial Completion*

(a) "*Substantial Completion*" means the stage in the progress of the work as determined and certified by the Contracting Officer in writing to the Contractor, on which the work (or a portion designated by the Government) is sufficiently complete and satisfactory. Substantial completion means that the property may be occupied or used for the purpose for which it is intended, and only minor items such as touch-up, adjustments, and minor replacements or installations remain to be completed or corrected which:

(1) do not interfere with the intended occupancy or utilization of the work, and
(2) can be completed or corrected within the time period required for final completion.

(b) The "date of substantial completion" means the date determined by the Contracting Officer or authorized Government representative as of which substantial completion of the work has been achieved.

Use and Possession upon Substantial Completion - The Government shall have the right to take possession of and use the work upon substantial completion. Upon notice by the Contractor that the work is substantially complete (a Request for Substantial Completion) and an inspection by the Contracting Officer or an authorized Government representative (including any required tests), the Contracting Officer shall furnish the Contractor a Certificate of Substantial Completion. The certificate will be accompanied by a Schedule of Defects listing items of work remaining to be performed, completed or corrected before final completion and acceptance. Failure of the Contracting Officer to list any item of work shall not relieve the Contractor of responsibility for complying with the terms of the contract. The Government's possession or use upon substantial completion shall not be deemed an acceptance of any work under the contract.

D.2 *Final Completion and Acceptance*

D.2.1 "*Final completion and acceptance*" means the stage in the progress of the work as determined by the Contracting Officer and confirmed in writing to the Contractor, at which all work required under the contract has been completed in a satisfactory manner, subject to the discovery of defects after final completion, and except for items specifically excluded in the notice of final acceptance.

D.2.2 The "*date of final completion and acceptance*" means the date determined by the Contracting Officer when final completion of the work has been achieved, as indicated by written notice to the Contractor.

D.2.3 *Final Inspection and Tests* - The Contractor shall give the Contracting Officer at least five (5) days advance written notice of the date when the work will be fully completed and ready for final inspection and tests. Final inspection and tests will be started not later than the date specified in the notice unless the Contracting Officer determines that the work is not ready for final inspection and so informs the Contractor.

D.2.4 *Final Acceptance* - If the Contracting Officer is satisfied that the work under the contract is complete (with the exception of continuing obligations), the Contracting Officer shall issue to the Contractor a notice of final acceptance and make final payment upon:

- Satisfactory completion of all required tests,
- a final inspection that all items by the Contracting Officer listed in the Schedule of Defects have been completed or corrected and that the work is finally complete (subject to the discovery of defects after final completion), and
- submittal by the Contractor of all documents and other items required upon completion of the work, including a final request for payment (Request for Final Acceptance)

E - DELIVERIES OR PERFORMANCE

52.211-10 COMMENCEMENT, PROSECUTION, AND COMPLETION OF WORK (APR 1984)

The Contractor shall be required to:

(a) commence work under this contract within _10_ calendar days after the date the Contractor receives the notice to proceed,
(b) prosecute the work diligently, and,
(c) complete the entire work ready for use not later than the approved number of days

The time stated for completion shall include final cleanup of the premises and completion of punch list items.

52.211-12 LIQUIDATED DAMAGES - CONSTRUCTION (SEP 2000)

(a) If the Contractor fails to complete the work within the time specified in the contract, or any extension, the Contractor shall pay liquidated damages to the Government in the amount of **$165** for each calendar day of delay until the work is completed or accepted.

(b) If the Government terminates the Contractor's right to proceed, liquidated damages will continue to accrue until the work is completed. These liquidated damages are in addition to excess costs of repurchase under the Default clause.

CONTRACTOR'S SUBMISSION OF CONSTRUCTION SCHEDULES

(a) The time for submission of the schedules referenced in FAR 52.236-15, "Schedules for Construction Contracts", paragraph (a), is hereby modified to reflect the due date for submission as " **5 (five)** calendar days after receipt of an executed contract".

(b) These schedules shall include the time by which shop drawings, product data, samples and other submittals required by the contract will be submitted for approval.

(c) The Contractor shall revise such schedules (1) to account for the actual progress of the work, (2) to reflect approved adjustments in the performance schedule, and (3) as required by the Contracting Officer to achieve coordination with work by the Government and any separate contractors used by the Government. The Contractor shall submit a schedule, which sequences work so as to minimize disruption at the job site.

(d) All deliverables shall be in the English language and any system of dimensions (English or metric) shown shall be consistent with that used in the contract. No extension of time shall be allowed due to delay by the Government in approving such deliverables if the Contractor has failed to act promptly and responsively in submitting its deliverables. The contractor shall identify each deliverable as required by the contract.

(e) Acceptance of Schedule: When the Government has accepted any time schedule; it shall be binding upon the Contractor. The completion date is fixed and may be extended only by a written contract modification signed by the Contracting Officer. Acceptance or approval of any schedule or revision thereof by the Government shall not:

(1) Extend the completion date or obligate the Government to do so,

(2) Constitute acceptance or approval of any delay, or
(3) Excuse the Contractor from or relieve the Contractor of its obligation to maintain the progress of the work and achieve final completion by the established completion date.

Notice Of Delay - If the Contractor receives a notice of any change in the work, or if any other conditions arise which are likely to cause or are actually causing delays which the Contractor believes may result in late completion of the project, the Contractor shall notify the Contracting Officer. The Contractor's notice shall state the effect, if any, of such change or other conditions upon the approved schedule, and shall state in what respects, if any, the relevant schedule or the completion date should be revised. The Contractor shall give such notice promptly, not more than ten (10) days after the first event giving rise to the delay or prospective delay. Only the Contracting Officer may make revisions to the approved time schedule.

Notice to Proceed

(a) After receiving and accepting any bonds or evidence of insurance, the Contracting Officer will provide the Contractor a Notice to Proceed. The Contractor must then prosecute the work, commencing and completing performance not later than the time period established in the contract.

(b) It is possible that the Contracting Officer may elect to issue the Notice to Proceed before receipt and acceptance of any bonds or evidence of insurance. Issuance of a Notice to Proceed by the Government before receipt of the required bonds or insurance certificates or policies shall not be a waiver of the requirement to furnish these documents.

Working Hours - All work shall be performed during the work period of 8:00 until 17:30 from Monday until Friday. Other hours, if requested by the Contractor, may be approved by the Contracting Officer's Representative (COR). The Contractor shall give 24 hours in advance to COR who will consider any deviation from the hours identified above. Changes in work hours, initiated by the Contractor, will not be a cause for a price increase.

Preconstruction Conference

A preconstruction conference will be held 10 days after contract award to discuss the schedule, submittals, notice to proceed, mobilization and other important issues that effect construction progress. See FAR 52.236-26, Preconstruction Conference.

Deliverables - The following items shall be delivered under this contract:

Description	Quantity	Delivery Date	Deliver to
Section G. Securities/Insurance	1	10 days after award	CO
Section E. Construction Schedule	1	5 days after award	COR
Section E Preconstruction Conference	1	10 days after award	COR
Section G. Personnel Biographies	1	10 days after award	COR
Section F. Payment Request	1	last calendar day of each month	COR
Section D. Request for Substantial Completion	1	15 days before inspection	COR
Section D Request for Final Acceptance	1	5 days before inspection	COR

F ADMINISTRATIVE DATA

652.242-70 CONTRACTING OFFICER'S REPRESENTATIVE (COR) (AUG 1999)

(a) The Contracting Officer may designate in writing one or more Government employees, by name or position title, to take action for the Contracting Officer under this contract. Each designee shall be identified as a Contracting Officer's Representative (COR). Such designation(s) shall specify the scope and limitations of the authority so delegated; provided, that the designee shall not change the terms or conditions of the contract, unless the COR is a warranted Contracting Officer and this authority is delegated in the designation.

(b) The COR for this contract is Lt. Col. Elton Sledge.

Payment: The Contractor's attention is directed to Section H, 52.232-5, "Payments Under Fixed-Price Construction Contracts". The following elaborates on the information contained in that clause.

Requests for payment, may be made no more frequently than monthly. Payment requests shall cover the value of labor and materials completed and in place, including a prorated portion of overhead and profit.

After receipt of the Contractor's request for payment, and on the basis of an inspection of the work, the Contracting Officer shall make a determination as to the amount, which is then due. If the Contracting Officer does not approve payment of the full amount applied for, less the retainage allowed by in 52.232-5, the Contracting Officer shall advise the Contractor as to the reasons.

Under the authority of 52.232-27(a), the 14 day period identified in FAR 52.232-27(a)(1)(i)(A) is hereby changed to 30 days.

U.S. EMBASSY in ANKARA
Ataturk Bul. No. 110
Kavaklidere, 06660, Ankara

G. SPECIAL REQUIREMENTS

G.1.0 **Performance/Payment Protection** - The Contractor shall furnish some form of payment protection as described in 52.228-13 in the amount of 20% of the contract price. A bank guarantee can be used.

G.1.1 The Contractor shall provide the information required by the paragraph above within ten (10) calendar days after award. Failure to timely submit the required security may result in rescinding or termination of the contract by the Government. If the contract is terminated, the contractor will be liable for those costs as described in FAR 52.249-10, Default (Fixed-Price Construction), which is included in this purchase order.

G.1.2 The bonds or alternate performance security shall guarantee the Contractor's execution and completion of the work within the contract time. This security shall also guarantee the correction of any defects after completion, the payment of all wages and other amounts payable by the Contractor under its subcontracts or for labor and materials, and the satisfaction or removal of any liens or encumbrances placed on the work.

G.1.3 The required securities shall remain in effect in the full amount required until final acceptance of the project by the Government. Upon final acceptance, the penal sum of the performance security shall be reduced to 10% of the contract price. The security shall remain in effect for one year after the date of final completion and acceptance, and the Contractor shall pay any premium required for the entire period of coverage.

G.2.0 **Insurance** - The Contractor is required by FAR 52.228-5, "Insurance - Work on a Government Installation" to provide whatever insurance is legally necessary. The Contractor shall at its own expense provide and maintain during the entire performance period the following insurance amounts:

G.2.1 General Liability (includes premises/operations, collapse hazard, products, completed operations, contractual, independent contractors, broad form property damage, personal injury)

1. Bodily Injury on or off the site stated in US Dollars:
   Per Occurrence $5,000
   Cumulative $50,000

2. Property Damage on or off the site in US Dollars:
   Per Occurrence $5,000
   Cumulative $20,000

G.2.2 The foregoing types and amounts of insurance are the minimums required. The Contractor shall obtain any other types of insurance required by local law or that are ordinarily or customarily obtained in the location of the work. The limit of such insurance shall be as provided by law or sufficient to meet normal and customary claims.

G.2.3 The Contractor agrees that the Government shall not be responsible for personal injuries or for damages to any property of the Contractor, its officers, agents, servants, and employees, or any other person, arising from and incident to the Contractor's performance of this contract. The

Contractor shall hold harmless and indemnify the Government from any and all claims arising therefrom, except in the instance of gross negligence on the part of the Government.

G.2.4 The Contractor shall obtain adequate insurance for damage to, or theft of, materials and equipment in insurance coverage for loose transit to the site or in storage on or off the site.

G.2.5 The general liability policy required of the Contractor shall name "the United States of America, acting by and through the Department of State", as an additional insured with respect to operations performed under this contract.

G.3.0 Document Descriptions

G.3.1 Supplemental Documents: The Contracting Officer shall furnish from time to time such detailed drawings and other information as is considered necessary, in the opinion of the Contracting Officer, to interpret, clarify, supplement, or correct inconsistencies, errors or omissions in the Contract documents, or to describe minor changes in the work not involving an increase in the contract price or extension of the contract time. The Contractor shall comply with the requirements of the supplemental documents, and unless prompt objection is made by the Contractor within 20 days, their issuance shall not provide for any claim for an increase in the Contract price or an extension of contract time.

G.3.1.1 Record Documents. The Contractor shall maintain at the project site:

(1) a current marked set of Contract drawings and specifications indicating all interpretations and clarification, contract modifications, change orders, or any other departure from the contract requirements approved by the Contracting Officer; and,
(2) a complete set of record shop drawings, product data, samples and other submittals as approved by the Contracting Officer.

G.3.1.2 "As-Built" Documents: After final completion of the work, but before final acceptance thereof, the Contractor shall provide:

(1) a complete set of "as-built" drawings, based upon the record set of drawings, marked to show the details of construction as actually accomplished; and,
(2) record shop drawings and other submittals, in the number and form as required by the specifications.

G.4.0 Laws and Regulations - The Contractor shall, without additional expense to the Government, be responsible for complying with all laws, codes, ordinances, and regulations applicable to the performance of the work, including those of the host country, and with the lawful orders of any governmental authority having jurisdiction. Host country authorities may not enter the construction site without the permission of the Contracting Officer. Unless otherwise directed by the Contracting Officer, the Contractor shall comply with the more stringent of the requirements of such laws, regulations and orders and of the contract. In the event of a conflict between the contract and such laws, regulations and orders, the Contractor shall promptly advise the Contracting Officer of the conflict and of the Contractor's proposed course of action for resolution by the Contracting Officer.

G.4.1 The Contractor shall comply with all local labor laws, regulations, customs and practices pertaining to labor, safety, and similar matters, to the extent that such compliance is not inconsistent

with the requirements of this contract.

G.4.2 The Contractor shall give written assurance to the Contracting Officer that all subcontractors and others performing work on or for the project have obtained all requisite licenses and permits.

G.4.3 The Contractor shall submit proper documentation and evidence satisfactory to the Contracting Officer of compliance with this clause.

G.5.0 Construction Personnel - The Contractor shall maintain discipline at the site and at all times take all reasonable precautions to prevent any unlawful, riotous, or disorderly conduct by or among those employed at the site. The contractor shall ensure the preservation of peace and protection of persons and property in the neighborhood of the project against such action. The Contracting Officer may require, in writing, that the Contractor remove from the work any employee that the Contracting Officer deems incompetent, careless, insubordinate or otherwise objectionable, or whose continued employment on the project is deemed by the Contracting Officer to be contrary to the Government's interests.

G.5.1 If the Contractor has knowledge that any actual or potential labor dispute is delaying or threatens to delay the timely performance of this contract, the Contractor shall immediately give notice, including all relevant information, to the Contracting Officer.

G.5.2 After award, the Contractor has ten calendar days to submit to the Contracting Officer a list of workers and supervisors assigned to this project for the Government to conduct all necessary security checks. It is anticipated that security checks will take **6-8 weeks** to perform. For each individual the list shall include:

Full Name
Place and Date of Birth
Current Address
Identification number (Kimlik numarasi)

Failure to provide any of the above information may be considered grounds for rejection and/or resubmittal of the application. Once the Government has completed the security screening and approved the applicants a badge will be provided to the individual for access to the site. This badge may be revoked at any time due to the falsification of data, or misconduct on site.

G.5.3 The Contractor shall provide an English speaking supervisor on site at all times. This position is considered as key personnel under this purchase order.

G.6.0 Materials and Equipment - All materials and equipment incorporated into the work shall be new and for the purpose intended, unless otherwise specified. All workmanship shall be of good quality and performed in a skillful manner that will withstand inspection by the Contracting Officer.

G.7.0 Special Warranties

G.7.1 Any special warranties that may be required under the contract shall be subject to the stipulations set forth in 52.246-21, "Warranty of Construction", as long as they are not in conflict.

G.7.2 The Contractor shall obtain and furnish to the Government all information required to make any subcontractor's, manufacturer's, or supplier's guarantee or warranty legally binding and effective. The contractor shall submit both the information and the guarantee or warranty to the Government in sufficient time to permit the Government to meet any time limit specified in the guarantee or warranty, but not later than completion and acceptance of all work under this contract.

G.8.0 Equitable Adjustments

Any circumstance for which the contract provides an equitable adjustment that causes a change within the meaning of paragraph (a) of the "Changes" clause shall be treated as a change under that clause; provided, that the Contractor gives the Contracting Officer prompt written notice (within 20 days) stating:

(a) the date, circumstances, and applicable contract clause authorizing an equitable adjustment and

(b) that the Contractor regards the event as a changed condition for which an equitable adjustment is allowed under the contract

The Contractor shall provide written notice of a differing site condition within 10 calendar days of occurrence following FAR 52.236-2, Differing Site Conditions.

G.9.0 Zoning Approvals and Permits

The Government shall be responsible for:

- obtaining proper zoning or other land use control approval for the project
- obtaining the approval of the Contracting Drawings and Specifications
- paying fees due for the foregoing; and,
- for obtaining and paying for the initial building permits.

H. CLAUSES

52.252-2 CLAUSES INCORPORATED BY REFERENCE (FEB 1998)

This contract incorporates one or more clauses by reference, with the same force and effect as if they were given in full text. Upon request, the Contracting Officer will make their full text available. Also, the full text of a clause may be accessed electronically at this/these address(es):

http://acquisition.gov/far/index.html or, http://farsite.hill.af.mil/search.htm

These addresses are subject to change. If the Federal Acquisition Regulation (FAR) is not available at the locations indicated above, use the Dept. of State Acquisition Website at http://www.statebuy.state.gov to see the links to the FAR. You may also use an Internet "search engine" (e.g., Yahoo, Excite, Alta Vista, etc.) to obtain the latest location of the most current FAR.

FEDERAL ACQUISITION REGULATION (48 CFR CH. 1)

Clause	Title and Date
52.204-9	PERSONAL IDENTIFICATION VERIFICATION OF CONTRACTOR PERSONNEL (JAN 2011)
52.204-10	Reporting Executive Compensation and First-Tier Subcontract Awards (JUL 2010)
52.209-6	Protecting the Government's Interest When Subcontracting with Contractors Debarred, Suspended, or Proposed for Debarment (DEC 2010)
52.213-4	Terms and Conditions-Simplified Acquisitions (Other than Commercial Items) (FEB 2012)
52.222-1	Notice to the Government of Labor Disputes (FEB 1997)
52.222-19	Child Labor – Cooperation with Authorities and Remedies (AUG 2010)
52.222-50	COMBATING TRAFFICKING IN PERSONS (FEB 2009)
52.223-18	Encouraging Contractor Policies to Ban Text Messaging While Driving (AUG 2011)
52.225-10	Notice of Buy American Act/Balance of Payments Program—Construction Materials (FEB 2000)
52.225-13	Restrictions on Certain Foreign Purchases (JUN 2008)
52.225-14	Inconsistency Between English Version and Translation of Contract (AUG 1989)
52.228-4	Workers' Compensation and War-Hazard Insurance Overseas (APR 1984)
52.228-5	Insurance - Work on a Government Installation (JAN 1997)
52.228-11	Pledges of Assets (SEP 2009)
52.228-13	Alternative Payment Protection (JUL 2000)
52.229-6	Taxes - Foreign Fixed-Price Contracts (JUN 2003)
52.232-5	Payments under Fixed-Price Construction Contracts (SEP 2002)
52.232-8	Discounts for Prompt Payment (FEB 2002)
52.232-11	Extras (APR 1984)
52.232-18	Availability of Funds (APR 1984)
52.232-24	Prohibition of Assignment of Claims (JAN 1986)
52.232-27	Prompt Payment for Construction Contracts (OCT 2008)
52.232-34	Payment by Electronic Funds Transfer – Other than Central Contractor Registration (MAY 1999)
52.233-1	Disputes (JUL 2002) Alternate I (DEC 1991)
52.233-3	Protest after Award (AUG 1996)
52.236-2	Differing Site Conditions (APR 1984)

52.236-3	Site Investigation and Conditions Affecting the Work (APR 1984)
52.236-5	Material and Workmanship (APR 1984)
52.236-6	Superintendence by the Contractor (APR 1984)
52.236-7	Permits and Responsibilities (NOV 1991)
52.236-8	Other Contracts (APR 1984)
52.236-9	Protection of Existing Vegetation, Structures, Equipment, Utilities, and Improvements (APR 1984)
52.236-10	Operations and Storage Areas (APR 1984)
52.236-11	Use and Possession Prior to Completion (APR 1984)
52.236-12	Cleaning Up (APR 1984)
52.236-14	Availability and Use of Utility Services (APR 1984)
52.236-15	Schedules for Construction Contracts (APR 1984)
52.236-21	Specifications and Drawings for Construction (FEB 1997)
52.236-26	Preconstruction Conference (FEB 1995)
52.242-14	Suspension Of Work (APR 1984)
52.243-4	Changes (JUNE 2007)
52.243-5	Changes and Changed Conditions (APR 1984)
52.244-6	Subcontracts for Commercial Items (DEC 2010)
52.245-9	Use & Charges (AUG 2010)
52.246-12	Inspection of Construction (AUG 1996)
52.246-21	Warranty of Construction (APR 1984)
52.249-2	Termination for Convenience of the Government (Fixed-Price) (MAY 2004) Alternate I (APR 1984)
52.249-14	Excusable Delay (APR 1984)
52.249-10	Default (Fixed-Price Construction) (APR 1984)

The following clauses are set forth in full text:

52.204-99 SYSTEM FOR AWARD MANAGEMENT REGISTRATION (AUGUST 2012) (DEVIATION)

(a) Definitions. As used in this clause-
"Central Contractor Registration (CCR) database" means the retired primary Government repository for Contractor information required for the conduct of business with the Government.
"Commercial and Government Entity (CAGE) code" means-
(1) A code assigned by the Defense Logistics Agency (DLA) Logistics Information Service to identify a commercial or Government entity; or
(2) A code assigned by a member of the North Atlantic Treaty Organization that DLA records and maintains in the CAGE master file. This type of code is known as an "NCAGE code."
"Data Universal Numbering System (DUNS) number" means the 9-digit number assigned by Dun and Bradstreet, Inc. (D&B) to identify unique business entities.
"Data Universal Numbering System+4 (DUNS+4) number" means the DUNS number assigned by D&B plus a 4-character suffix that may be assigned by a business concern. (D&B has no affiliation with this 4-character suffix.) This 4-character suffix may be assigned at the discretion of the business concern to establish additional **SAM** records for identifying alternative Electronic Funds Transfer (EFT) accounts (see the FAR at Subpart 32.11) for the same concern.

"Registered in the **SAM** database" means that-
(1) The Contractor has entered all mandatory information, including the DUNS number or the DUNS+4 number, into the SAM database;
(2) The Contractor's CAGE code is in the **SAM** database; and
(3) The Government has validated all mandatory data fields, to include validation of the Taxpayer Identification Number (TIN) with the Internal Revenue Service (IRS), and has marked the record "Active". The Contractor will be required to provide consent for TIN Attachment, Page 1 of 4 validation to the Government as a part of the **SAM** registration process.
"System for Award Management (SAM)" means the primary Government repository for prospective federal awardee information and the centralized Government system for certain contracting, grants, and other assistance related processes. It includes-
(1) Data collected from prospective federal awardees required for the conduct of business with the Government;
(2) Prospective contractor submitted annual representations and certifications in accordance with FAR Subpart 4.12; and
(3) The list of all parties suspended, proposed for debarment, debarred, declared ineligible, or excluded or disqualified under the nonprocurement common rule by agencies, Government corporations , or by the Government Accountability Office.

(b) (1) The Contractor shall be registered in the **SAM** database prior to submitting an invoice and through final payment of any contract, basic agreement, basic ordering agreement, or blanket purchasing agreement resulting from this solicitation.
(2) The **SAM** registration shall be for the same name and address identified on the contract, with its associated CAGE code and DUNS or DUNS+4.
(3) If indicated by the Government during performance, registration in an alternate system may be required in lieu of SAM.

(c) If the Contractor does not have a DUNS number, it should contact Dun and Bradstreet directly to obtain one.
(1) A contractor may obtain a DUNS number-
(i) Via the internet at http://fedgov.dnb.com/webform or if the contractor does not have internet access, it may call Dun and Bradstreet at 1-866-705-5711 if located within the United States; or
(ii) If located outside the United States, by contacting the local Dun and Bradstreet office. The contractor should indicate that it is a contractor for a U.S. Government contract when contacting the local Dun and Bradstreet office.
(2) The Contractor should be prepared to provide the following information:
(i) Company legal business name.
(ii) Trade style, doing business, or other name by which your entity is commonly recognized.
(iii) Company physical street address, city, state and Zip Code.
(iv) Company mailing address, city, state and Zip Code (if separate from physical).
(v) Company telephone number.
(vi) Date the company was started.
(vii) Number of employees at your location.
(viii) Chief executive officer/key manager.
(ix) Line of business (industry).
(x) Company Headquarters name and address (reporting relationship within your entity).

(d) Reserved.

(e) Processing time for registration in SAM, which normally takes five business days, should be taken into consideration when registering. Contractors who are not already registered should consider applying for registration at least two weeks prior to invoicing.

(f) The Contractor is responsible for the accuracy and completeness of the data within the **SAM** database, and for any liability resulting from the Government's reliance on inaccurate or incomplete data. To remain registered in the **SAM** database after the initial registration, the Contractor is required to review and update on an annual basis from the date of initial registration or subsequent updates its information in the **SAM** database to ensure it is current, accurate and complete. Updating information in the **SAM** does not alter the terms and conditions of this contract and is not a substitute for a properly executed contractual document.

(g) (1)(i) If a Contractor has legally changed its business name, "doing business as" name, or division name (whichever is shown on the contract), or has transferred the assets used in performing the contract, but has not completed the necessary requirements regarding novation and change-of-name agreements in Subpart 42.12, the Contractor shall provide the responsible Contracting Officer sufficient documentation to support the legally changed name with a minimum of one business day's written notification of its intention to-
(A) Change the name in the **SAM** database;
(B) Comply with the requirements of subpart 42.12 of the FAR; and
(C) Agree in writing to the timeline and procedures specified by the responsible Contracting Officer.
(ii) If the Contractor fails to comply with the requirements of paragraph (g) (1) (i) of this clause, or fails to perform the agreement at paragraph (g) (1) (i) (C) of this clause, and, in the absence of a properly executed novation or change-of-name agreement, the **SAM** information that shows the Contractor to be other than the Contractor indicated in the contract will be considered to be incorrect information within the meaning of the "Suspension of Payment" paragraph of the electronic funds transfer (EFT) clause of this contract.
(2) The Contractor shall not change the name or address for EFT payments or manual payments, as appropriate, in the **SAM** record to reflect an assignee for the purpose of assignment of claims (see FAR Subpart 32.8, Assignment of Claims). Assignees shall be separately registered in the **SAM** database. Information provided to the Contractor's **SAM** record that indicates payments, including those made by EFT, to an ultimate recipient other than that Contractor will be considered to be incorrect information within the meaning of the "Suspension of payment" paragraph of the EFT clause of this contract.

(h) Contractors may obtain information on registration and annual confirmation requirements via the **SAM** accessed through https://www.acquisition.gov or by calling 866-606-8220, or 334-206-7828 for international calls.

(End of Clause)

DEPARTMENT OF STATE ACQUISITION REGULATION (DOSAR) CLAUSES

652.204-70 DEPARTMENT OF STATE PERSONAL IDENTIFICATION CARD ISSUANCE PROCEDURES (MAY 2011)

(a) The Contractor shall comply with the Department of State (DOS) Personal Identification Card Issuance Procedures for all employees performing under this contract who require frequent and continuing access to DOS facilities, or information systems. The Contractor shall insert this clause in all subcontracts when the subcontractor's employees will require frequent and continuing access to DOS facilities, or information systems.

(b) The DOS Personal Identification Card Issuance Procedures may be accessed at *http://www.state.gov/m/ds/rls/rpt/c21664.htm* .

(End of clause)

CONTRACTOR IDENTIFICATION (JULY 2008)

Contract performance may require contractor personnel to attend meetings with government personnel and the public, work within government offices, and/or utilize government email.

Contractor personnel must take the following actions to identify themselves as non-federal employees:

1) Use an email signature block that shows name, the office being supported and company affiliation (e.g. "John Smith, Office of Human Resources, ACME Corporation Support Contractor");
2) Clearly identify themselves and their contractor affiliation in meetings;
3) Identify their contractor affiliation in Departmental e-mail and phone listings whenever contractor personnel are included in those listings; and
4) Contractor personnel may not utilize Department of State logos or indicia on business cards.

(End of clause)

DOSAR 652.236-70 ACCIDENT PREVENTION (APR 2004)

(a) *General*. The contractor shall provide and maintain work environments and procedures which will safeguard the public and Government personnel, property, materials, supplies, and equipment exposed to contractor operations and activities; avoid interruptions of Government operations and delays in project completion dates; and, control costs in the performance of this contract. For these purposes, the contractor shall:

(1) Provide appropriate safety barricades, signs and signal lights;

(2) Comply with the standards issued by any local government authority having jurisdiction over occupational health and safety issues; and,

(3) Ensure that any additional measures the contracting officer determines to be reasonably necessary for this purpose are taken.

(4) For overseas construction projects, the contracting officer shall specify in writing additional requirements regarding safety if the work involves:

(i) Scaffolding;

(ii) Work at heights above two (2) meters;

(iii) Trenching or other excavation greater than one (1) meter in depth;

(iv) Earth moving equipment;

(v) Temporary wiring, use of portable electric tools, or other recognized electrical hazards. Temporary wiring and portable electric tools require the use of a ground fault circuit interrupter (GFCI) in the affected circuits; other electrical hazards may also require the use of a GFCI;

(vi) Work in confined spaces (limited exits, potential for oxygen less that 19.5 percent or combustible atmosphere, potential for solid or liquid engulfment, or other hazards considered to be immediately dangerous to life or health such as water tanks, transformer vaults, sewers, cisterns, etc.);

(vii) Hazardous materials – a material with a physical or health hazard including but not limited to, flammable, explosive, corrosive, toxic, reactive or unstable, or any operations which creates any kind of contamination inside an occupied building such as dust from demolition activities, paints, solvents, etc.; or

(viii) Hazardous noise levels.

(b) *Records*. The contractor shall maintain an accurate record of exposure data on all accidents incident to work performed under this contract resulting in death, traumatic injury, occupational disease, or damage to or theft of property, materials, supplies, or equipment. The contractor shall report this data in the manner prescribed by the contracting officer.

(c) *Subcontracts*. The contractor shall be responsible for its subcontractors' compliance with this clause.

(d) *Written program.* Before commencing work, the contractor shall:

(1) Submit a written plan to the contracting officer for implementing this clause. The plan shall include specific management or technical procedures for effectively controlling hazards associated with the project; and,

(2) Meet with the contracting officer to discuss and develop a mutual understanding relative to administration of the overall safety program.

(e) *Notification*. The contracting officer shall notify the contractor of any non-compliance with these requirements and the corrective actions required. This notice, when delivered to the contractor or the contractor's representative on site, shall be deemed sufficient notice of the non-compliance and corrective action required. After receiving the notice, the contractor shall immediately take corrective action. If the contractor fails or refuses to promptly take corrective action, the contracting officer may issue an order suspending all or part of the work until satisfactory corrective action has been taken. The contractor shall not be entitled to any equitable adjustment of the contract price or extension of the performance schedule on any suspension of work order issued under this clause.
(End of clause)

652.242-73 AUTHORIZATION AND PERFORMANCE (AUG 1999)

(a) The contractor warrants the following:

(1) That is has obtained authorization to operate and do business in the country or countries in which this contract will be performed;

(2) That is has obtained all necessary licenses and permits required to perform this contract; and,

(3) That it shall comply fully with all laws, decrees, labor standards, and regulations of said country or countries during the performance of this contract.

(b) If the party actually performing the work will be a subcontractor or joint venture partner, then such subcontractor or joint venture partner agrees to the requirements of paragraph (a) of this clause.

652.243-70 NOTICES (AUG 1999)

Any notice or request relating to this contract given by either party to the other shall be in writing. Said notice or request shall be mailed or delivered by hand to the other party at the address provided in the schedule of the contract. All modifications to the contract must be made in writing by the contracting officer.

652.229-71 PERSONAL PROPERTY DISPOSITION AT POSTS ABROAD (AUG 1999)

Regulations at 22 CFR Part 136 require that U.S. Government employees and their families do not profit personally from sales or other transactions with persons who are not themselves entitled to exemption from import restrictions, duties, or taxes. Should the contractor experience importation or tax privileges in a foreign country because of its contractual relationship to the United States Government, the contractor shall observe the requirements of 22 CFR Part 136 and all policies, rules, and procedures issued by the chief of mission in that foreign country.

I. LIST OF ATTACHMENTS

ATTACHMENT NO.	DESCRIPTION OF ATTACHMENT	NO.PAGES
Attachment 1	Statement of Work	8 pgs.
Attachment 2	Sample Bank Letter of Guaranty	1 pg.
Attachment 3	Breakdown of Price by Divisions of Specifications	1 pg.
Attachment 4	List of Holidays	1 pg.

J. QUOTATION INFORMATION

A. QUALIFICATIONS OF OFFERORS

Offerors/quoters must be technically qualified and financially responsible to perform the work described in this solicitation. At a minimum, each Offeror/Quoter must meet the following requirements:

(1) Be able to understand written and spoken English;
(2) Have an established business with a permanent address and telephone listing;
(3) Be able to demonstrate prior construction experience with suitable references;
(4) Have the necessary personnel, equipment and financial resources available to perform the work;
(5) Have all licenses and permits required by local law;
(6) Meet all local insurance requirements;
(7) Have the ability to obtain or to post adequate performance security, such as bonds, irrevocable letters of credit or guarantees issued by a reputable financial institution;
(8) Have no adverse criminal record; and
(9) Have no political or business affiliation which could be considered contrary to the interests of the United States.

B. SUBMISSION OF QUOTATIONS

This solicitation is for the performance of the construction services described in SCOPE OF WORK, and the Attachments which are a part of this request for quotation.

Each quotation must consist of the following:

Volume	Title	No. of Copies*
I	Standard Form 18 including a completed Attachment 4, "BREAKDOWN OF PROPOSAL PRICE BY DIVISIONS OF SPECIFICATIONS.	_____
II	Performance schedule in the form of a "bar chart" and Business Management/Technical Proposal.	_____
IV	Catalogues with specifications	_____

Submit the complete quotation to the address indicated on Standard Form, if mailed, or the address set forth below, if hand delivered.

U.S. EMBASSY in ANKARA
314. Sokak (Eski 22), Celik Apt. No: 11,
Kirkkonaklar, Cankaya, Ankara

The Offeror/Quoter shall identify and explain/justify any deviations, exceptions, or conditional assumptions taken with respect to any of the instructions or requirements of this request for quotation in the appropriate volume of the offer.

Volume II: Performance schedule and Business Management/Technical Proposal.

(a) Present the performance schedule in the form of a "bar chart" indicating when the various portions of the work will be commenced and completed within the required schedule. This bar chart shall be in sufficient detail to clearly show each segregable portion of work and its planned commencement and completion date.

(b) The Business Management/Technical Proposal shall be in two parts, including the following information:

Proposed Work Information - Provide the following:

(1) A list of the names, addresses and telephone numbers of the owners, partners, and principal officers of the Offeror;

(2) The name and address of the Offeror's field superintendent for this project;

(3) A list of the names, addresses, and telephone numbers of subcontractors and principal materials suppliers to be used on the project, indicating what portions of the work will be performed by them; and,

Experience and Past Performance - List all contracts and subcontracts your company has held over the past three years for the same or similar work. Provide the following information for each contract and subcontract:

(1) Customer's name, address, and telephone numbers of customer's lead contract and technical personnel;

(2) Contract number and type;

(3) Date of the contract award place(s) of performance, and completion dates; Contract dollar value;

(4) Brief description of the work, including responsibilities; and

(5) Any litigation currently in process or occurring within last 5 years.

C. 52.236-27 SITE VISIT (FEB 1995)

(a) The clauses at 52.236-2, Differing Site Conditions, and 52.236-3, Site Investigations and Conditions Affecting the Work, will be included in any contract awarded as a result of this solicitation. Accordingly, offerors or quoters are urged and expected to inspect the site where the work will be performed.

(b) A site visit has been scheduled for Aug. 05, 2013 at 10:00 a.m.
(c) Participants will meet at ODC, Inonu Cad. No. 94, Bakanliklar, Ankara.

D. MAGNITUDE OF CONSTRUCTION PROJECT

It is anticipated that the range in price of this contract will be: **under $150,000.**

E. LATE QUOTATIONS. Late quotations shall be handled in accordance with FAR

F. 52.252-1 SOLICITATION PROVISIONS INCORPORATED BY REFERENCE (FEB 1998)

This contract incorporates the following provisions by reference, with the same force and effect as if they were given in full text. Upon request, the Contracting Officer will make their full text available. The offeror is cautioned that the listed provisions may include blocks that must be completed by the offeror and submitted with its quotation or offer. In lieu of submitting the full text of those provisions, the offeror may identify the provision by paragraph identifier and provide the appropriate information with its quotation or offer. Also, the full text of a solicitation provision may be accessed electronically at:

http://acquisition.gov/far/index.html/ or, http://farsite.hill.af.mil/search.htm

These addresses are subject to change. If the Federal Acquisition Regulation (FAR) is not available at the locations indicated above, use of an Internet "search engine" (such as, Yahoo, Infoseek, Alta Vista, etc.) is suggested to obtain the latest location of the most current FAR. http://www.statebuy.state.gov

FEDERAL ACQUISITION REGULATION (48 CFR CH. 1)
52.215-1 INSTRUCTIONS TO OFFERORS--COMPETITIVE ACQUISITION (JAN 2004), which is incorporated by reference into this solicitation.

K. EVALUATION CRITERIA

Award will be made to the lowest priced, acceptable, responsible quoter. The Government reserves the right to reject quotations that are unreasonably low or high in price.

The Government will determine acceptability by assessing the offeror's compliance with the terms of the RFQ. The Government will determine responsibility by analyzing whether the apparent successful quoter complies with the requirements of FAR 9.1, including:

- ability to comply with the required performance period, taking into consideration all existing commercial and governmental business commitments;
- satisfactory record of integrity and business ethics;
- necessary organization, experience, and skills or the ability to obtain them;
- necessary equipment and facilities or the ability to obtain them; and
- otherwise qualified and eligible to receive an award under applicable laws and regulations.

SECTION L - REPRESENTATIONS, CERTIFICATIONS AND OTHER STATEMENTS OF OFFERORS OR QUOTERS

L.1 52.204-3 TAXPAYER IDENTIFICATION (OCT 1998)

(a) Definitions.

"Common parent", as used in this provision, means that corporate entity that owns or controls an affiliated group of corporations that files its Federal income tax returns on a consolidated basis, and of which the offeror is a member.

"Taxpayer Identification Number (TIN)", as used in this provision, means the number required by the IRS to be used by the offeror in reporting income tax and other returns. The TIN may be either a Social Security Number or an Employer Identification Number.

(b) All offerors must submit the information required in paragraphs (d)through (f) of this provision in order to comply with debt collection requirements of 31 U.S.C. 7701(c) and 3325 (d), reporting requirements of 26 USC 6041, 6041A, and 6050M and implementing regulations issued by the Internal Revenue Service (IRS). If the resulting contract is subject to the reporting requirements described in FAR 4.904, the failure or refusal by the offeror to furnish the information may result in a 31 percent reduction of payments otherwise due under the contract.

(c) The TIN may be used by the Government to collect and report on any delinquent amounts arising out of the offeror's relationship with the Government (3l USC 7701(c)(3)). If the resulting contract is subject to the payment reporting requirements described in FAR 4.904, the TIN provided hereunder may be matched with IRS records to verify the accuracy of the offeror's TIN.

(d) Taxpayer Identification Number (TIN).

TIN: _____
[ ] TIN has been applied for.
[ ] TIN is not required because:
[ ] Offeror is a nonresident alien, foreign corporation, or foreign partnership that does not have income effectively connected with the conduct of a trade or business in the U.S. and does not have an office or place of business or a fiscal paying agent in the U.S.;
[ ] Offeror is an agency or instrumentality of a foreign government;
[ ] Offeror is an agency or instrumentaltiy of the Federal Government.

(e) Type of Organization.

[ ] Sole Proprietorship;
[ ] Partnership:
[ ] Corporate Entity (not tax exempt);
[ ] Corporate Entity (tax emempt);
[ ] Government entity (Federal, State, or local);
[ ] Foreign government;
[ ] International organization per 26 CFR 1.6049-4;
[ ] Other _____

(f) Common Parent.

[ ] Offeror is not owned or controlled by a common parent as defined in paragraph (a) of this clause.

[ ] Name and TIN of common parent;

Name _____
TIN _____

(End of provision)

L.2 52.204-6 CONTRACTOR IDENTIFICATION NUMBER -DATA UNIVERSAL NUMBERING SYSTEM (DUNS) NUMBER (OCT 2003)

(a) The offeror shall enter, in the block with its name and address on the cover page of its offer, the annotation "DUNS" or "DUNS+4" followed by the DUNS number or DUNS+4 that identifies the offeror's name and address exactly as stated in the offer. The DUNS number if a nine-digit number assigned by Dun and Bradstreet Information Services. The DUNS+4 is the DUNS number plus a 4-character suffix that may be assigned at the discretion of the offeror to establish additional CCR records for identifying alternative Electronic Funds Transfer (EFT) accounts (see Subpart 32.11) for the same parent company.

If the offeror does not have a DUNS number, it should contact Dun and Bradstreet directly to obtain one. An offeror may obtain a DUNS number-

- If located within the United States, by calling Dun and Bradstreet at 1-866-705-5711 or via the Internet at http://www.dnb.com; or
- If located outside the United States, by contacting the local Dun and Bradstreet office.

The offeror should be prepared to provide the following information:

- Company legal business name.
- Tradestyle, doing business, or other name by which your entity is commonly recognized.
- Company physical street address, city, state and Zip Code.
- Company mailing address, city, state and Zip Code (if separate from physical)
- Company telephone number
- Date the company was started.
- Number of employees at your location.
- Chief executive officer/key manager.
- Line of business (industry)
- Company Headquarters name and address (reporting relationship within your entity).

L.3 **52.204-8 Annual Representations and Certifications. (Feb 2012)**

(a)(1) The North American Industry Classification System (NAICS) code for this acquisition is 236220 for Construction Management, commercial and institutional building or Warehouse construction; 237310 for Construction Management, highway road, street or bridge; 237990 for Construction

Management, outdoor recreation facility; 236118 for Construction Management, residential remodeling; 237110 for Construction Management, water and sewage line and related structures.

(2) The small business size standard is$28.5 million.

(3) The small business size standard for a concern which submits an offer in its own name, other than on a construction or service contract, but which proposes to furnish a product which it did not itself manufacture, is 500 employees.

(b)(1) If the clause at 52.204-7, Central Contractor Registration, is included in this solicitation, paragraph (d) of this provision applies.

(2) If the clause at 52.204-7 is not included in this solicitation, and the offeror is currently registered in CCR, and has completed the ORCA electronically, the offeror may choose to use paragraph (d) of this provision instead of completing the corresponding individual representations and certifications in the solicitation. The offeror shall indicate which option applies by checking one of the following boxes:

[ ] (i) Paragraph (d) applies.

[ ] (ii) Paragraph (d) does not apply and the offeror has completed the individual representations and certifications in the solicitation.

(c)(1) The following representations or certifications in ORCA are applicable to this solicitation as indicated:

(i) 52.203-2, Certificate of Independent Price Determination. This provision applies to solicitations when a firm-fixed-price contract or fixed-price contract with economic price adjustment is contemplated, unless—

(A) The acquisition is to be made under the simplified acquisition procedures in Part 13;

(B) The solicitation is a request for technical proposals under two-step sealed bidding procedures; or

(C) The solicitation is for utility services for which rates are set by law or regulation.

(ii) 52.203-11, Certification and Disclosure Regarding Payments to Influence Certain Federal Transactions. This provision applies to solicitations expected to exceed $150,000.

(iii) 52.204-3, Taxpayer Identification. This provision applies to solicitations that do not include the clause at 52.204-7, Central Contractor Registration.

(iv) 52.204-5, Women-Owned Business (Other Than Small Business). This provision applies to solicitations that—

(A) Are not set aside for small business concerns;

(B) Exceed the simplified acquisition threshold; and

(C) Are for contracts that will be performed in the United States or its outlying areas.

(v) 52.209-2, Prohibition on Contracting with Inverted Domestic Corporations—Representation. This provision applies to solicitations using funds appropriated in fiscal years 2008, 2009, or 2010.

(vi) 52.209-5, Certification Regarding Responsibility Matters. This provision applies to solicitations where the contract value is expected to exceed the simplified acquisition threshold.

(vii) 52.214-14, Place of Performance—Sealed Bidding. This provision applies to invitations for bids except those in which the place of performance is specified by the Government.

(viii) 52.215-6, Place of Performance. This provision applies to solicitations unless the place of performance is specified by the Government.

(ix) 52.219-1, Small Business Program Representations (Basic & Alternate I). This provision applies to solicitations when the contract will be performed in the United States or its outlying areas.

(A) The basic provision applies when the solicitations are issued by other than DoD, NASA, and the Coast Guard.

(B) The provision with its Alternate I applies to solicitations issued by DoD, NASA, or the Coast Guard.

(x) 52.219-2, Equal Low Bids. This provision applies to solicitations when contracting by sealed bidding and the contract will be performed in the United States or its outlying areas.

(xi) 52.222-22, Previous Contracts and Compliance Reports. This provision applies to solicitations that include the clause at 52.222-26, Equal Opportunity.

(xii) 52.222-25, Affirmative Action Compliance. This provision applies to solicitations, other than those for construction, when the solicitation includes the clause at 52.222-26, Equal Opportunity.

(xiii) 52.222-38, Compliance with Veterans' Employment Reporting Requirements. This provision applies to solicitations when it is anticipated the contract award will exceed the simplified acquisition threshold and the contract is not for acquisition of commercial items.

(xiv) 52.223-1, Biobased Product Certification. This provision applies to solicitations that require the delivery or specify the use of USDA–designated items; or include the clause at 52.223-2, Affirmative Procurement of Biobased Products Under Service and Construction Contracts.

(xv) 52.223-4, Recovered Material Certification. This provision applies to solicitations that are for, or specify the use of, EPA–designated items.

(xvi) 52.225-2, Buy American Act Certificate. This provision applies to solicitations containing the clause at 52.225-1.

(xvii) 52.225-4, Buy American Act—Free Trade Agreements—Israeli Trade Act Certificate. (Basic, Alternate I, and Alternate II) This provision applies to solicitations containing the clause at 52.225-3.

(A) If the acquisition value is less than $25,000, the basic provision applies.

(B) If the acquisition value is $25,000 or more but is less than $50,000, the provision with its Alternate I applies.

(C) If the acquisition value is $50,000 or more but is less than $67,826, the provision with its Alternate II applies.

(xviii) 52.225-6, Trade Agreements Certificate. This provision applies to solicitations containing the clause at 52.225-5.

(xix) 52.225-20, Prohibition on Conducting Restricted Business Operations in Sudan—Certification. This provision applies to all solicitations.

(xx) 52.225-25, Prohibition on Contracting with Entities Engaging in Sanctioned Activities Relating to Iran—Representation and Certification. This provision applies to all solicitations.

(xxi) 52.226-2, Historically Black College or University and Minority Institution Representation. This provision applies to—

(A) Solicitations for research, studies, supplies, or services of the type normally acquired from higher educational institutions; and

(B) For DoD, NASA, and Coast Guard acquisitions, solicitations that contain the clause at 52.219-23, Notice of Price Evaluation Adjustment for Small Disadvantaged Business Concerns.

(2) The following certifications are applicable as indicated by the Contracting Officer: [*Contracting Officer check as appropriate.*]

__ (i) 52.219-22, Small Disadvantaged Business Status.

__ (A) Basic.

__ (B) Alternate I.

__ (ii) 52.222-18, Certification Regarding Knowledge of Child Labor for Listed End Products.

__ (iii) 52.222-48, Exemption from Application of the Service Contract Act to Contracts for Maintenance, Calibration, or Repair of Certain Equipment Certification.

__ (iv) 52.222-52, Exemption from Application of the Service Contract Act to Contracts for Certain Services–Certification.

__ (v) 52.223-9, with its Alternate I, Estimate of Percentage of Recovered Material Content for EPA–Designated Products (Alternate I only).

__ (vi) 52.227-6, Royalty Information.

__ (A) Basic.

__(B) Alternate I.

__ (vii) 52.227-15, Representation of Limited Rights Data and Restricted Computer Software.

(d) The offeror has completed the annual representations and certifications electronically via the Online Representations and Certifications Application (ORCA) website accessed through https://www.acquisition.gov. After reviewing the ORCA database information, the offeror verifies by submission of the offer that the representations and certifications currently posted electronically that apply to this solicitation as indicated in paragraph (c) of this provision have been entered or updated within the last 12 months, are current, accurate, complete, and applicable to this solicitation (including the business size standard applicable to the NAICS code referenced for this solicitation), as of the date of this offer and are incorporated in this offer by reference (see FAR 4.1201); except for the changes identified below [*offeror to insert changes, identifying change by clause number, title, date*]. These amended representation(s) and/or certification(s) are also incorporated in this offer and are current, accurate, and complete as of the date of this offer.

FAR CLAUSE #	TITLE	DATE	CHANGE
_____	_____	_____	_____

Any changes provided by the offeror are applicable to this solicitation only, and do not result in an update to the representations and certifications posted on ORCA.

(End of provision)

L.4. 52.225-18 PLACE OF MANUFACTURE (SEPT 2006)

(a) *Definitions*. As used in this clause—

" Manufactured end product" means any end product in Federal Supply Classes (FSC) 1000-9999, except—

(1) FSC 5510, Lumber and Related Basic Wood Materials;
(2) Federal Supply Group (FSG) 87, Agricultural Supplies;
(3) FSG 88, Live Animals;
(4) FSG 89, Food and Related Consumables;
(5) FSC 9410, Crude Grades of Plant Materials;
(6) FSC 9430, Miscellaneous Crude Animal Products, Inedible;
(7) FSC 9440, Miscellaneous Crude Agricultural and Forestry Products;
(8) FSC 9610, Ores;
(9) FSC 9620, Minerals, Natural and Synthetic; and
(10) FSC 9630, Additive Metal Materials.

"Place of manufacture" means the place where an end product is assembled out of components, or otherwise made or processed from raw materials into the finished product that is to be provided to the Government. If a product is disassembled and reassembled, the place of reassembly is not the place of manufacture.

(b) For statistical purposes only, the offeror shall indicate whether the place of manufacture of the end products it expects to provide in response to this solicitation is predominantly—

(1) [ ] In the United States (Check this box if the total anticipated price of offered end products manufactured in the United States exceeds the total anticipated price of offered end products manufactured outside the United States); or
(2) [ ] Outside the United States.

L.5 AUTHORIZED CONTRACT ADMINISTRATOR

If the offeror does not fill-in the blanks below, the official who signed the offer will be deemed to be the offeror's representative for Contract Administration, which includes all matters pertaining to payments.

Name: _____

Address: _____

_____

Telephone Number: _____

[Proposal Note: If the bidder/offeror has indicated "yes" in blocks (a)(1), (2), or (3) of the following provision, the bidder/offeror shall include Defense Base Act insurance costs covering those employees in their proposed prices. The bidder/offeror may obtain DBA insurance directly from any Department of Labor approved providers at the DOL website at http://www.dol.gov/owcp/dlhwc/lscarrier.htm.]

L.6 652.228-70 DEFENSE BASE ACT – COVERED CONTRACTOR EMPLOYEES (JUN 2006)

(a) Bidders/offerors shall indicate below whether or not any of the following categories of employees will be employed on the resultant contract, and, if so, the number of such employees:

Category	**Yes/No**	**Number**
(1) United States citizens or residents		
(2) Individuals hired in the United States, regardless of citizenship		
(3) Local nationals or third country nationals where contract performance takes place in a country where there are no *local workers' compensation laws*		*Local nationals:* _____ *Third Country Nationals:* _____
(4) Local nationals or third country nationals where contract performance takes place in a country where there are *local workers' compensation laws*		*Local nationals:* _____ *Third Country Nationals:* _____

(b) The contracting officer has determined that for performance in the country of **Turkey –**

☐ Workers' compensation laws exist that will cover local nationals and third country nationals.

☐ Workers' compensation laws do not exist that will cover local nationals and third country nationals.

(c) If the bidder/offeror has indicated "yes" in block (a)(4) of this provision, the bidder/offeror shall not purchase Defense Base Act insurance for those employees. However, the bidder/offeror shall assume liability toward the employees and their beneficiaries for war-hazard injury, death, capture, or detention, in accordance with the clause at FAR 52.228-4.

(d) RESERVED

L.7. 52.225-25 Prohibition on Contracting with Entities Engaging in Sanctioned Activities Relating to Iran—Representation and Certification. (Nov 2011)

(a) *Definitions.*

"Person"—

(1) Means—

(i) A natural person;

(ii) A corporation, business association, partnership, society, trust, financial institution, insurer, underwriter, guarantor, and any other business organization, any other nongovernmental entity, organization, or group, and any governmental entity operating as a business enterprise; and

(iii) Any successor to any entity described in paragraph (1)(ii) of this definition; and

(2) Does not include a government or governmental entity that is not operating as a business enterprise.

"Sensitive technology"—

(1) Means hardware, software, telecommunications equipment, or any other technology that is to be used specifically—

(i) To restrict the free flow of unbiased information in Iran; or

(ii) To disrupt, monitor, or otherwise restrict speech of the people of Iran; and

(2) Does not include information or informational materials the export of which the President does not have the authority to regulate or prohibit pursuant to section 203(b)(3) of the International Emergency Economic Powers Act (50 U.S.C. 1702(b)(3)).

(b) The offeror shall e-mail questions concerning sensitive technology to the Department of State at *CISADA106@state.gov*.

(c) Except as provided in paragraph (d) of this provision or if a waiver has been granted in accordance with 25.703-4, by submission of its offer, the offeror—

(1) Represents, to the best of its knowledge and belief, that the offeror does not export any sensitive technology to the government of Iran or any entities or individuals owned or controlled by, or acting on behalf or at the direction of, the government of Iran; and

(2) Certifies that the offeror, or any person owned or controlled by the offeror, does not engage in any activities for which sanctions may be imposed under section 5 of the Iran Sanctions Act. These sanctioned activities are in the areas of development of the petroleum resources of Iran, production of refined petroleum products in Iran, sale and provision of refined petroleum products to Iran, and contributing to Iran's ability to acquire or develop certain weapons or technologies.

(d) *Exception for trade agreements*. The representation requirement of paragraph (c)(1) and the certification requirement of paragraph (c)(2) of this provision do not apply if—

(1) This solicitation includes a trade agreements notice or certification (*e.g.*, 52.225-4, 52.225-6, 52.225-12, 52.225-24, or comparable agency provision); and

(2) The offeror has certified that all the offered products to be supplied are designated country end products or designated country construction material.

(End of provision)

ATTACHMENT #1

SCOPE of WORK for RENEWING BOILER TUBES OF THE HEATING BOILERS

DESCRIPTION OF WORK

This project requires the replacing of 126 old boiler tubes with new boiler tubes for the three heating boilers that are currently in the boiler room in ODC-T Building.

The Contractor is required to provide all labor and materials necessary to dismantle and replace the boiler tubes for the three heating boilers and the removal of the debris/tubes.

The Contractor must provide all necessary equipment, materials and workmanship with industry standards and acceptable quality and all workmanship must comply with safety standards as directed.

Contractor has to submit for approval all materials used on this project, prior to purchase.

Any material found inadequate or procured without approval can be rejected and must be removed by the Contractor at no additional cost to the Government.

Contractor will develop a Work Schedule (WS) and have it approved by the COR.

Based on mutually agreed schedule, ODC must clear the planned work area from personnel and Government owned valuable materials and equipment.

Contractor will be held liable for any damage to personal or Government equipment which is due to negligence, or improper or unsafe construction practices.

All work must be performed in a safe manner and conform to U.S. and Turkish safety standards.

GENERAL TASKS

- Contractor to provide all materials, equipment, and labor necessary to perform all work in accordance with the terms and conditions of this SOW. Final acceptance is subject to final verification by the COR.
- Contractor shall provide all necessary tools and equipment in sufficient quantities, including items such as extension cords, spare parts, and metalworking machinery, as needed during the execution of the work.
- Contractor must protect all property, equipment, and people from hazards resulting from work.

- All materials shall be presented for approval and consent of the COR prior to the purchase and/or implementation.

The Replacing Method of Boiler Tubes of Heating Boiler:

Materials:

1.Boiler Tubes:

-Each heating boiler has 42 boiler tubes. In total 126 boiler tubes will be dismantled and be replaced with new boiler tubes which will have the technical features below:

-Boiler Tube Size: Outside Diameter (OD) is 42.4 mm, Wall Thickness is 3.2 mm, and Length of the each boiler tube is 191 cm.

-Standards of the boiler tubes will match all applicable codes, including, but not limited to BS 3059 Part 1 & 2, ASTM A 178, EN 10217-2, EN 10217-3.

-Surface Conditions Boiler Tubes will be black self-colored/uncoated.

-Quality Certificates will match PED Certified-Pressure Equipment Directive 97/23/EC Certified, BV Marine Approval.

2. Heating Boiler

-The brand and model of the Heating Boiler: Buderus/ Logano SK 625

-Manufacturing Year: 1997

EXECUTION

General

Dismantling and Assembling: During the course of dismantling the boiler tubes, thermal insulations mats will be secured to prevent any harm. The latest techniques will be used to dismantle the boiler tubes to prevent any harm to the tube holes.

Special care will be given during the assembly phase to prevent any loss of boiler efficiency. The reconstruction of key boiler components and the operation of the boiler system, as well as legal and technical requirements must be observed during the assembly phase. Hydraulic and pressure tests

must be performed in accordance with the boiler's technical manual and a technical document must be given to certify the satisfactory completion of the work at the end of the project.

Installing The Boiler Tubes: A total of 126 boiler tubes (42 tubes per boiler) must be replaced with new boiler tubes according to the technical manual. The technical features of the boiler tubes have been detailed previously.

Welding: While installing the boiler tubes the Contractor will utilize advanced and necessary welding solutions to prevent any boiler efficiency problems or other accidents.

PROTECTION

The contractor will protect the work area from public usage during the execution of the work. Electrical equipment must only be handled by authorized personnel. All necessary security and safety precautions must be taken by the contractor.

SAFETY REQUIREMENTS

US Government reserves the right to inspect the Contractor's work at any time to assure compliance with safety procedures. Should the Contractor violate any safety procedures or requirements, US Government reserves the right to issue a stop work order. The stop work order shall remain in effect until such time as the Contractor has resolved the violation. Responsibility for the stop work order shall rest solely with the Contractor with no cost or schedule impact to US Government.

HOUSEKEEPING

The Contractor shall be responsible for daily cleanup and removal (within Contractor's work areas) of all materials and debris resulting from the execution of this SOW. The contractor shall be responsible for removal of it from the site. The Contractor shall ensure that all work areas are clean. The government reserves salvage rights to all materials removal and must approve disposal of any materials. The Contractor will dispose of all materials/debris approved for disposal by the COR.

FINAL CLEAN-UP

Remove all debris, rubbish, and excess material from the work area.

SAFETY REQUIREMENTS

US Government reserves the right to inspect the Contractor's work at any time to assure compliance with safety procedures. Should the Contractor violate any safety procedures or requirements, US Government reserves the right to issue a stop work order. The stop work order shall remain in effect until such time as the Contractor has resolved the violation. Responsibility for the stop work order shall rest solely with the Contractor with no cost or schedule impact to US Government.

HOUSEKEEPING

The Contractor shall be responsible for daily cleanup and removal (within Contractor's work areas) of all materials and debris resulting from the execution of this SOW. The contractor shall be responsible for removal of it from the site. The Contractor shall ensure that all work areas are clean. The government reserves salvage rights to all materials removal and must approve disposal of any materials. The Contractor will dispose of all materials/debris approved for disposal by the COR.

FINAL CLEAN-UP

Remove all debris, rubbish, and excess material from the work area.

SCHEME OF THE WORK

Site visits can be arranged to view the area of work and for measuring prior to contract award.

ATTACHMENT FOR DRAWINGS:

SCHEME OF THE WORK

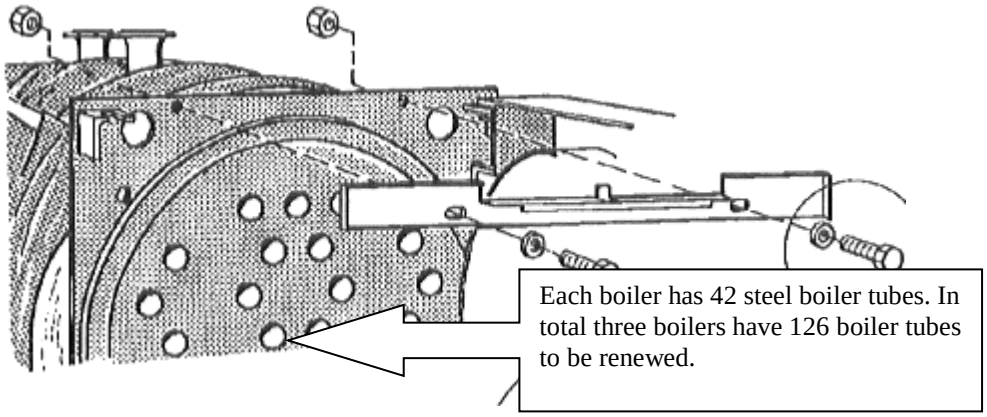

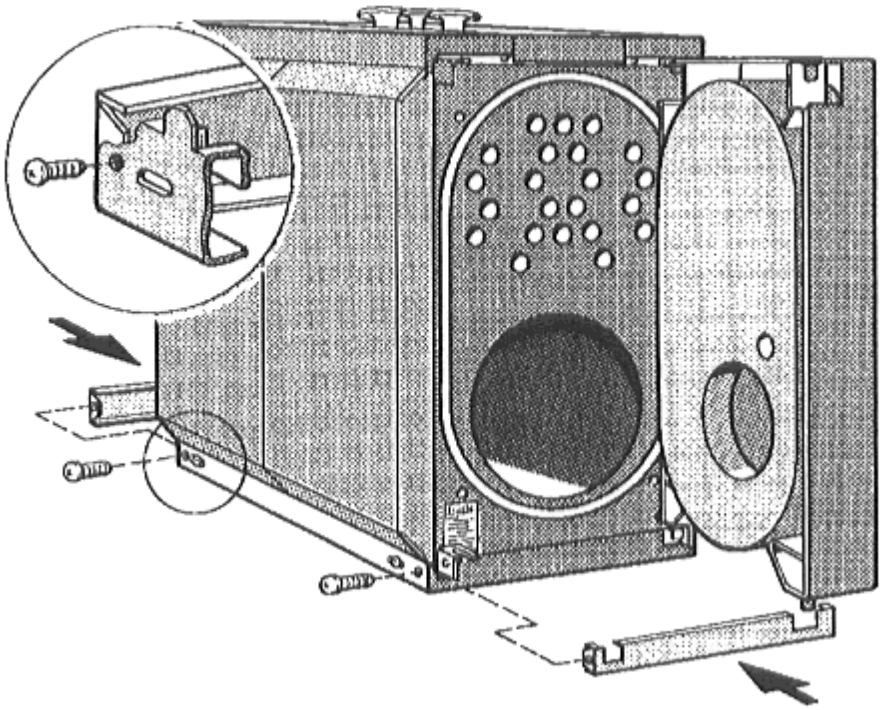

ATTACHMENT NO. 2

SAMPLE LETTER OF BANK GUARANTY

Place [ ]
Date [ ]

Contracting Officer
U.S. Embassy, [Post name]
[Mailing Address]

Letter of Guaranty No. _____

SUBJECT: Performance and Guaranty

The Undersigned, acting as the duly authorized representative of the bank, declares that the bank hereby guarantees to make payment to the Contracting Officer by check made payable to the Treasurer of the United States, immediately upon notice, after receipt of a simple written request from the Contracting Officer, immediately and entirely without any need for the Contracting Officer to protest or take any legal action or obtain the prior consent of the Contractor to show any other proof, action, or decision by an other authority, up to the sum of [Amount equal to 20% of the contract price in U.S. dollars during the period ending with the date of final acceptance and 10% of the contract price during contract guaranty period], which represents the deposit required of the contractor to guarantee fulfillment of his obligations for the satisfactory, complete, and timely performance of the said contract [contract number] for [description of work] at [location of work] in strict compliance with the terms, conditions and specifications of said contract, entered into between the Government and [name of contractor] of [address of contractor] on [contract date], plus legal charges of 10% per annum on the amount called due, calculated on the sixth day following receipt of the Contracting Officer's written request until the date of payment.

The undersigned agrees and consents that said contract may be modified by Change Order or Supplemental Agreement affecting the validity of the guaranty provided, however, that the amount of this guaranty shall remain unchanged.

The undersigned agrees and consents that the Contracting Officer may make repeated partial demands on the guaranty up to the total amount of this guaranty, and the bank will promptly honor each individual demand.

This letter of guaranty shall remain in effect until 3 months after completion of the guaranty period of Contract requirement.

_____-

Depository Institution: [Name]
Address: Location: _____
Representative(s): _____ _____ State of Inc.: _____
_____ _____ Corporate Seal:
_____ _____

_____

Certificate of Authority is attached evidencing authority of the signer to bind the bank to this document.

ATTACHMENT NO. 3

UNITED STATES DEPARTMENT OF STATE
BREAKDOWN OF PRICE BY DIVISIONS OF SPECIFICATIONS

	DESCRIPTION	LABOR (USD)	MATERIALS (USD)	OVERHEAD (USD)	PROFIT (USD)	TOTAL (USD)
1	Mobilization					
2	Dismantling and Assembling					
3	Replacing old boiler tubes with new boiler tubes					
4	Allowance					
	TOTAL:					

Offeror's Co.

Name:_____

_____ Date: __/__/___

Signature:

ATTACHMENT NO. 4

LIST of HOLIDAYS

The U.S. Embassy will be closed on the following official holidays observed by the American Embassy in 2013:

Date(s)	Day(s)	Holiday	Actual Work Days	Turkish/American
January 1	Tuesday	New Year's Day	1	T/A
January 21	Monday	Birthday of Martin Luther King, Jr.	1	A
February 18	Monday	Washington's Birthday	1	A
April 23	Tuesday	Milli Egemenlik ve Çocuk Bayramı (National Sovereignty and Children's Day)	1	T
May 1	Wednesday	Emek ve Dayanışma Günü (Labor and Solidarity Day)	1	T
May 19	Sunday	Atatürk'ü Anma, Gençlik ve Spor Bayramı (Ataturk Memorial, Youth and Sports Day)	0	T
May 27	Monday	Memorial Day	1	A
July 4	Thursday	Independence Day	1	A
August 07 – 10	Wed-Sat	Ramazan Bayramı (Ramadan Holiday) (from 13:00 on 8/7, Wednesday)	2 ½	T
August 30	Friday	Zafer Bayramı (Victory Day)	1	T
September 2	Monday	Labor Day	1	A
October 14	Monday	Columbus Day	1	A
*October14-18	Mon-Friday	Kurban Bayramı (Sacrifice Holiday) (from 13:00 on 10/14, Monday)	4	T
October 28-29	Mon-Tuesday	Cumhuriyet Bayramı (Turkish Independence Day) (from 13:00 on 10/28, Monday)	1½	T
November 11	Monday	Veterans Day	1	A
November 28	Thursday	Thanksgiving Day	1	A
December 25	Wednesday	Christmas Day	1	A
		Total =	**21**	

*October 14, half day (Arefe) of Kurban Bayrami (Sacrifice Holiday) coincides with the Columbus Day.