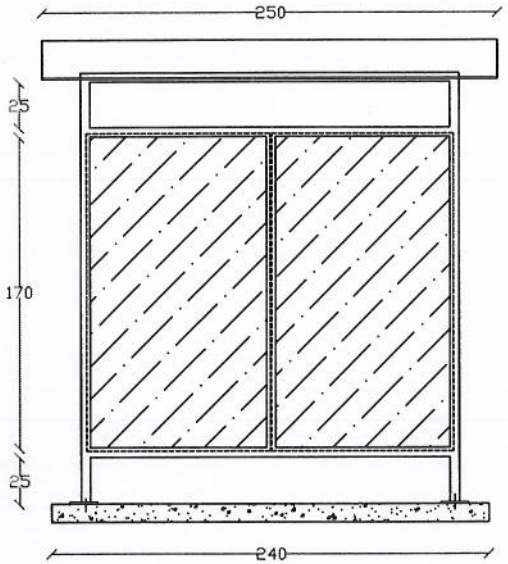

Lenght Elevation
(Back)

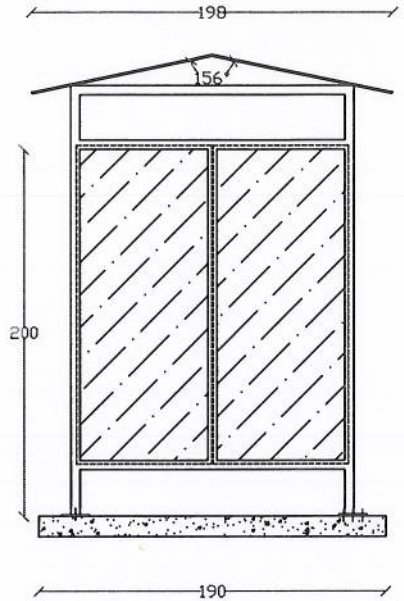

Width elevation

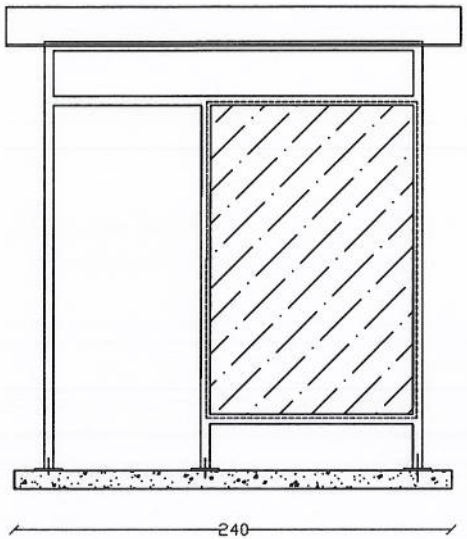

Lenght Elevation
(Front)

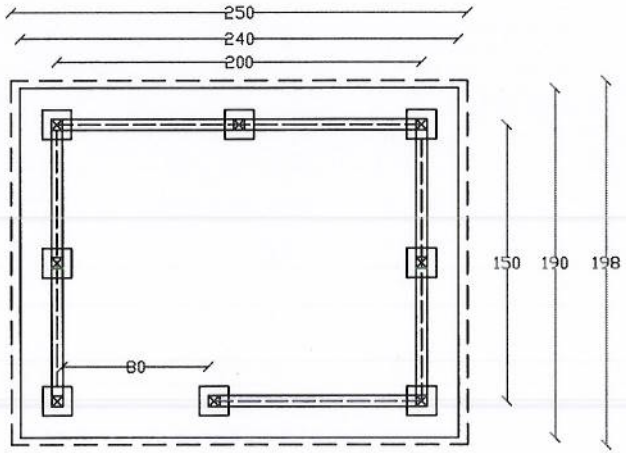

Plan View