- TERMS AND CONDITIONS / WARRANTY
- INSTALLATION
- HOOKUP
- MECHANICAL THEORY
- STARTUP
- HYDRAULIC TROUBLE SHOOTING
- ELECTRICAL TROUBLE SHOOTING
- MAINTENANCE
- DRAWINGS

DOCUMENT DSC207S **JOB 7976 – MUSCAT, OMAN**

DELTA
SCIENTIFIC CORPORATION

CORPORATE HEADQUARTERS
40355 Delta Lane
Palmdale, California 93551
Phone: (661) 575-1100
Fax: (661) 575-1109
Email: info@deltascientific.com
www.deltascientific.com

EASTERN REGION U.S.A.
125 Wyatt Lane
Fredericksburg, VA 22406
Phone: (703) 541-9114-5-6
Fax: (703) 541-9117
Email: deltava@aol.com

© 2012 DELTA SCIENTIFIC CORPORATION

DELTA
SCIENTIFIC CORPORATION

TERMS AND CONDITIONS OF PRODUCT SALE

THIS PURCHASE CONTRACT ("CONTRACT") SETS FORTH THE TERMS AND CONDITIONS FOR THE SALE BY DELTA SCIENTIFIC CORPORATION ("DELTA") TO THE BUYER SPECIFICED HEREIN ("BUYER") OF THE PRODUCTS SPECIFIED IN THE QUOTATION IDENTIFIED BELOW (THE "PRODUCTS"). THIS CONTRACT DOES NOT CONSTITUTE ACCEPTANCE OF ANY OFFER BY BUYER, WHETHER ORAL OR WRITTEN, INCLUDING BUT NOT LIMITED TO ANY PURCHASE ORDER, LETTER, E-MAIL, MEMO, OR ANY OTHER FORM. SALES OF THE PRODUCTS ARE LIMITED SOLELY TO THIS CONTRACT.

Acceptance. Buyer accepts these terms and conditions when the first of the following occurs: Buyer (a) signs or makes a written acceptance of this Contract; (b) authorizes production or shipment of any part of the Products; or c) accepts Delta's Product submittals. Acceptance is expressly limited to all terms and conditions hereof without any addition, modification or exception, and Delta expressly rejects any additional or inconsistent terms, conditions, contingencies or covenants previously or hereafter proposed by Buyer. This Contract, when accepted by Delta at its corporate offices in California, constitutes the entire agreement between Delta and Buyer, superseding any prior agreement or understanding between the parties with respect to the subject matter hereof.

1. **Shipment and Delivery**. Buyer acknowledges that this Contract, and any additional Buyer orders accepted by Delta hereunder, are firm and non--cancelable. Deliveries of the Products will be made F.O.B. Delta's plant at Palmdale, California. Delta will arrange for shipment. Buyer will bear all costs of shipment and insurance and will reimburse all such costs incurred by Delta when invoiced. Upon Delta's delivery of the Products at Delta's plant to any carrier or Buyer's representative, Buyer assumes all risk of loss and damage with respect to the Products. Buyer shall promptly inspect each shipment upon receipt, and shall promptly inform Delta in the event all Products listed in Delta's shipping documents do not arrive as scheduled or are damaged or defective.
2. **Payment Terms**. If credit is approved in advance by Delta, payment terms are net thirty (30) days from the date of invoice. If credit is not approved in advance, Buyer shall make payment in full prior to delivery. Delta's invoice will be issued and dated upon date of shipment of Products. All payments shall be made at Palmdale, California. Unpaid invoices shall bear interest at the maximum lawful rate or 1.5% per month, whichever is less, commencing upon the date payment is due. Buyer shall be responsible for all costs of collection, including but not limited to reasonable attorneys' fees and expenses.
3. **Taxes and Similar Charges**. Buyer shall bear all applicable federal, state, municipal and other taxes (such as sales, use, excise, ad valorem and similar taxes), customs duties and charges. The lack of any such tax or charge on the invoice shall not affect Buyer's tax liability.
4. **Use and Permits**. Buyer will be responsible for operation of Products, including, but not limited to, obtaining all use and export permits, building permits, licenses, certificates and the like, required by any regulatory body for installation and use of the Products. If Buyer wishes for Delta to install any Products purchased hereunder, the terms and conditions of installation shall be set forth in a separate agreement.
5. **Limited Warranty; Limitation of Liability.** Delta warrants that during the warranty period applicable to the product, the Products will be free from defect in material and workmanship. Delta's sole obligation under this warranty shall be to repair (or at Delta's option, to replace), FOB Palmdale, California any defective product, without charge to Buyer, provided that: (a) Buyer gives Delta written notice of any claimed defect within the applicable limited warranty period; (b) the Products, if installed, were installed correctly and in accordance with any instructions provided by Delta, (c) the Products have not been altered, subjected to misuse, negligence or accident, or used with parts not authorized by Delta, (d) the Products have been properly and timely maintained by Buyer in accordance with the preventive maintenance instructions provided, and (e) the replaced Product(s) and or part(s) is/are properly removed and returned to Delta, using the Material Return Authorization (MRA) number and information provided by Delta. Product and Product part troubleshooting, diagnosis and/or replacement, and the cost of such replacement installation and/or related remedial services, are the sole responsibility of Buyer. The duration of the applicable Product warranty is ninety (90) days for guard booths, gates, traffic items and spare parts and one (1) year for Delta's Barricade/Barrier Systems, from date of shipment. Primer, paint and other surface coatings are excluded from warranty. FAILURE BY BUYER TO MAKE TIMELY PAYMENT IN FULL FOR THE PRODUCTS, AND/OR FAILURE BY BUYER TO PROPERLY AND TIMELY CONDUCT PREVENTIVE MAINTENANCE, FAILURE TO FOLLOW DELTA'S INSTRUCTIONS FOR PROBLEM TROUBLESHOOTING AND/OR DIAGNOSIS, AND/OR FAILURE TO PROPERLY INSTALL, REMOVE AND/OR RE-INSTALL A PRODUCT OR PART THEREOF, INVALIDATES THIS WARRANTY. IN THE EVENT A PRODUCT PROBLEM IS NOT THE RESULT OF A PRODUCT DEFECT, BUYER SHALL BE RESPONSIBLE FOR MAINTENANCE CHARGES AT DELTA'S STANDARD TIME AND MATERIALS RATES. NO OTHER WARRANTY IS EXPRESSED AND NONE SHALL BE IMPLIED, INCLUDING WITHOUT LIMITATION THE WARRANTY OF MERCHANTABILITY OR WARRANTY OF FITNESS FOR USE OR FOR A PARTICULAR PURPOSE. THE FOREGOING STATES DELTA'S ENTIRE LIABILITY WITH RESPECT TO THE PRODUCTS. IN NO EVENT SHALL DELTA BE LIABLE FOR ANY SPECIAL, INCIDENTAL OR CONSEQUENTIAL DAMAGES WHICH RESULT FROM THE USE OF THE PRODUCTS BY BUYER OR ANY OTHER PARTY, AND IN NO EVENT SHALL DELTA'S LIABILITY EXCEED THE PRICE OF THE PARTICULAR PRODUCT UNIT(S) INVOLVED IN ANY CLAIM.
6. **Disclaimer and Indemnification.** Buyer acknowledges that the Products, designed for control of vehicular traffic, inherently involve a trade off of risk versus benefit. Buyer must devote careful consideration to the selection, placement and design of a barricade installation. To ensure approaching vehicles and pedestrians are fully aware of the Barricades and their operation, proper illumination, clearly worded warning signs, auxiliary devices such as semaphore gates, stop-go signal lights, audible warning devices, speed bumps, flashing lights, beacons, etc. should be considered. It is strongly recommended that the Buyer consult an architect and/or a traffic and/or safety engineer prior to installation of a Barricade/Barrier system. Delta does not purport to offer either architectural, traffic or safety engineering information. Buyer also concedes that, beyond its written installation, maintenance and operation instructions, Delta has no control as to how the Products will be utilized, or how persons in the vicinity of the Products, including but not limited to drivers, bicyclists and/or pedestrians, will act. Therefore, Buyer shall hold harmless, indemnify and defend Delta from and against all claims, demands, judgments and awards resulting from Buyer's use or misuse of the Products, including, but not limited to, claims for personal injury, wrongful death and damage to real or personal property. However, in no event shall this indemnification provision apply where Delta's sole negligence resulted in the claim, judgment or award. Each party shall give the other party prompt written notice of any claim or suit for which such other party is responsible hereunder. The responsible party shall control the defense and/or settlement of such claim; provided that neither party has the authority to enter into a settlement, make an admission, or undertake any obligation or liability without the other party's written consent.
7. **General.** Delta shall not be liable for any delays or failure of performance, beyond the reasonable control of Delta, that affect Delta or any of Delta's suppliers; including, but not limited to, those caused by acts of God, acts of public enemy, acts or omissions of Buyer or its contractors and sub-contractors, fire, strike, riot, flood, governmental interference, unavailability or shortage of materials, labor, fuel or power through normal commercial channels, or failure or destruction of plant or equipment arising from any cause whatsoever. In the event of delay, the date of delivery shall be extended for a period equal to the time lost by such delay, and this Contract shall remain in full force and effect. This Contract may be modified only in writing. This Contract shall be governed by and construed in accordance with the laws of the state of California. Neither this Contract nor any rights or benefits hereunder are assignable by Buyer without prior written consent of Delta. Any such prohibited assignment shall be null and void. Notices shall be given in writing, via certified or overnight mail with proof of deliver, to an authorized representative or officer of a party.

ACCEPTED BY: _____	DELTA SCIENTIFIC CORP	QUOTE NO: _____
NAME: _____	NAME: _____	REV / DATE: _____
DATE: _____	DATE: _____	

Copyright 2006 Delta Scientific Corporation
All Rights Reserved

DELTA
SCIENTIFIC CORPORATION

WARRANTY AND LIMITATION OF LIABILITY

Delta Scientific Corporation warrants that during the first one year (365) days from date of shipment, the Products will be free from defect in material and workmanship. Delta's sole obligation under this warranty shall be to repair (or at Delta's option, to replace), FOB: Palmdale, California, any defective product, without charge to Buyer, provided that, (a). Buyer gives Delta written notice of any such claimed defect within such period of one year (365) days, (b). The Products, if installed, were installed by a Delta authorized installer, (c). The Products have not been altered, subjected to misuse, negligence or accident, or used with parts not authorized by Delta, and (d). The Products have been maintained in accordance with the instructions provided. NO OTHER WARRANTY IS EXPRESSED AND NONE SHALL BE IMPLIED, INCLUDING WITHOUT LIMITATION THE WARRANTY OF MERCHANTABILITY OR WARRANTY OF FITNESS FOR USE OR FOR A PARTICULAR PURPOSE. THE FOREGOING STATES DELTA'S ENTIRE LIABILITY WITH RESPECT TO THE PRODUCTS. IN NO EVENT SHALL DELTA BE LIABLE FOR ANY SPECIAL, INCIDENTAL OR CONSEQUENTIAL DAMAGES WHICH RESULT FROM THE USE BY BUYER OR ANY OTHER PARTY, OF THE PRODUCTS, AND IN NO EVENT SHALL DELTA'S LIABILITY EXCEED THE AMOUNTS PAID BY BUYER FOR THE PRODUCTS HEREUNDER.

DISCLAIMER

Please note - careful consideration must be devoted to the selection, placement and design of a Barricade installation. Just as in the case of any Barricade system, perimeter security device or security gate that blocks a roadway or drive, care must be taken to ensure that approaching vehicles as well as pedestrians are fully aware of the Barricades and their operation. Proper illumination, clearly worded warning signs, auxiliary devices such as semaphore gates, stop-go signal lights, audible warning devices, speed bumps, flashing lights, beacons, etc. should be considered. Delta has information available on many such auxiliary safety equipment not specifically listed herein. It is strongly recommended that an architect and/or a traffic and/or safety engineer be consulted prior to installation of a Barricade system. Delta will offer all possible assistance in designing the operating equipment, controls and the overall system, but we are not qualified, nor do we purport to offer either traffic or safety engineering information.

INTELLECTUAL PROPERTY, DRAWINGS, SPECIFICATIONS AND TECHNICAL DATA

The drawings and/or data included with this equipment unless otherwise noted remain the confidential property and trade secret of Delta Scientific Corporation. They shall not be disclosed, reproduced or used for manufacture, design or construction without the express authorization of Delta Scientific Corporation. The recipient by accepting these drawings and/or data, assumes custody thereof and under the above terms agrees not to allow the use of by unauthorized persons.

Copyright 2011 Delta Scientific Corporation
All Rights Reserved

40355 Delta Lane - Palmdale, California 93551, USA - Phone: (661) 575-1100 - FAX: (661) 575-1109

www.deltascientific.com

DELTA

MECHANICAL
INSTALLATION INSTRUCTIONS
VEHICLE ARREST SYSTEM

COPYRIGHT 1991 DELTA SCIENTIFIC CORPORATION

ALL RIGHTS RESERVED

MFG. UNDER U.S. PATENT #4,097,170 4,158,514 4,318,079 4,354,771 4,490,068 4,576,508 4,715,742

U.K. PATENT # GB 2,127,893B 2,138,883B

40355 DELTA LANE • PALMDALE, CALIFORNIA 93551, USA • PHONE (661) 575-1100 • FAX (661) 575-1109

E-MAIL: info@deltascientific.com

MECHANICAL INSTALLATION INSTRUCTIONS
DELTA PHALANX® STYLE BARRIERS

Safety Precautions

At all times observe good safety practices when working on either the electrical or mechanical system. Particular attention should be paid to the danger of working on the Barrier when the power is on. Barriers are powerful hydraulic presses that can easily crush anything in their way. Keep hands free of the mechanism when the power is on or the HPU is up to pressure. Turn off the electric power and bleed the hydraulic pressure down to zero before working on any part of the system. Traffic should be controlled around the Barrier during any work so that vehicular accidents do not occur if the Barrier should happen to rise. After work is complete, do not allow traffic over the Barrier until all control and safety functions have been verified to be properly working.

Foundation

The Barrier foundation frame is to be cast in place. The outside of the Barrier foundation frame is the form, no additional flashing or forming should be necessary. The installation may performed by removing the Barrier ram wedge prior to placing the foundation frame into position in the foundation excavation. See the above precautions about working under the Barrier. Disassembly of the Barrier is outlined in the Maintenance section of this manual.

The excavation for the foundation frame can be individual for each Barrier in a set or the foundation can be common for all Barriers if more than one is installed. We recommend the common foundation as providing the strongest Barrier system. See the appropriate foundation drawing in the Drawing Section of the manual. The foundations shown on Delta drawings, unless specially noted, are designed on a soil load bearing factor of 1.5 tons/ft2 [14,600 kg/m2]. Only a very boggy or migrating site would require additional foundation.

In multiple barricade installations where two or more units are cast into a common foundation, the inter unit spacing can be reduced from any desired spacing to zero if required by the layout. Reinforcement in the inter barrier area should be distributed uniformly while repeating the placement pattern described in the single barrier foundation design.

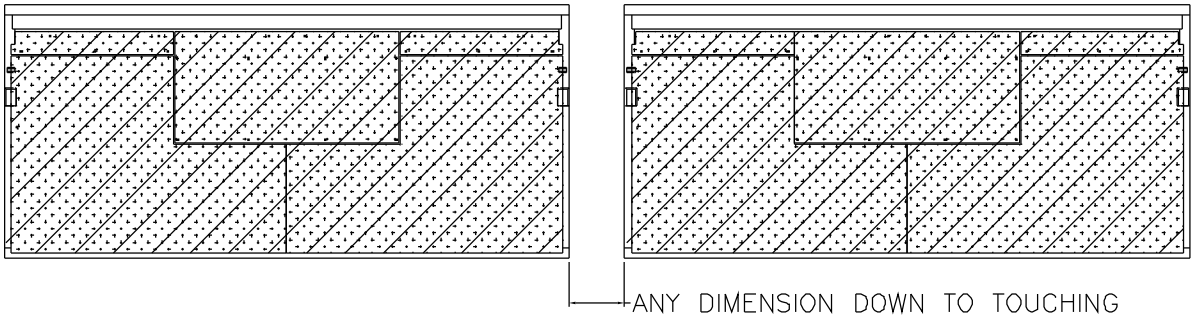

Figure 1 - Two Barriers shown side by side - any required distance between them is possible

Copyright 2005 Delta Scientific Corporation
All Rights Reserved

Care should be taken to mount the Barrier in an area that is not subject to flooding. Additionally, the roadway should be crowned in the area of the Barrier to prevent standing water from draining into the Barrier foundation frame. It is not necessary for the Barrier to be level or plumb to operate. If the roadway is not level the Barrier may be placed to match the contour; however, be sure the appearance factor is considered. An installation where the equipment is not level even if it follows the terrain can be distracting.

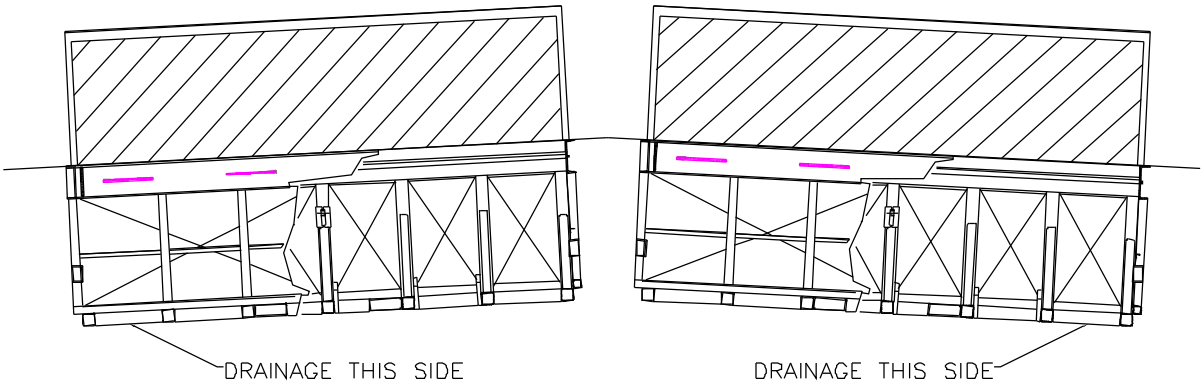

Figure 2 - Two Barriers shown side by side and following the slope of the road. While this is a satisfactory method of installation, the appearance factor should also be considered. Note that the drains must be placed in the low side of the Barriers

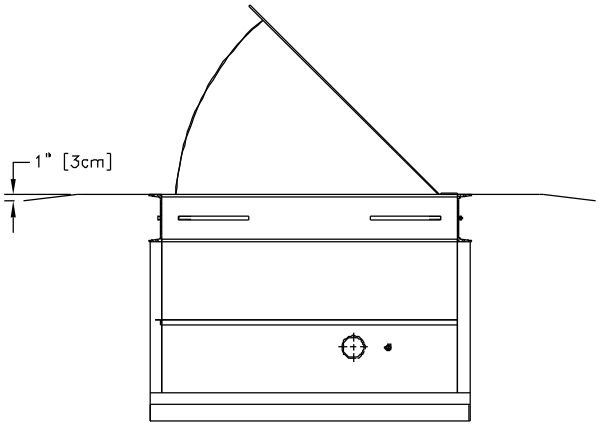

Figure 3 - The Barriers should be placed on a crown above the surrounding roadway to prevent excessive water from draining into the Barrier foundation frame.

The Barrier can be secured in the foundation by leveling with concrete blocks or if desired held to temporary wooden frames to assure alignment during the pour. Before the pour, the frame of the Barrier should be checked for straightness. This can be accomplished by using a string line along each side. Pouring concrete with the sides (especially the front) curved in can allow the barrier ram to hit the frame before obtaining full height. Call the factory if the string line detects the frame more than 0.20 inch [5 mm] out of line.

Copyright 2005 Delta Scientific Corporation
All Rights Reserved

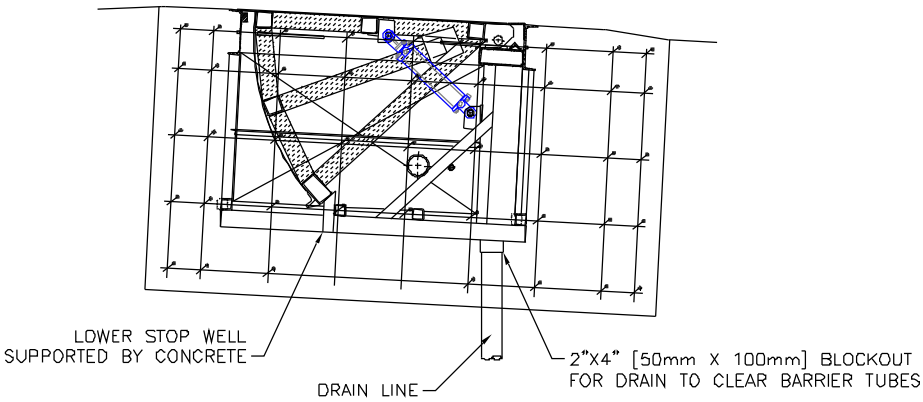

Figure 4 - Cross-section through the Barrier frame. Note that an approximately 2" x 4" [50mm x 100mm] block-out is required across the foundation slab to drain past the Barrier longitudinal structural members. Since the Barrier is sloped towards the rear, the drain is placed along the rear edge of the Barrier frame. The concrete should be well bedded in the area of the lower wedge stop (shim or grout in this area if not well supported by concrete).

Figure 5 - Delta Phalanx Barrier installed in roadway ramp. Note the trench drain in the rear to minimize the amount of water that the Barrier drainage must handle.

Copyright 2005 Delta Scientific Corporation
All Rights Reserved

Figure 6 - Delta Phalanx lower wedge stop. Check that the stop is well supported from underneath. Shim or grout as necessary for support. Check that the Barrier wedge rests on the stop when in the fully lowered position.

Environmental Control

Delta Scientific Corporation's vehicle Barrier systems can be used in all geographical areas. Since the early 1980's, Delta Barriers have been successfully installed in locations just south of the Arctic Circle (Oslo and Stockholm), in extremely cold areas of the United States such as Idaho Falls and Grand Forks, and in all the capital cities of Europe. Tropical installations include more than thirty locations within ten degrees latitude of the Equator. In between, installations run from temperate areas to Middle East desert sands.

Heating

Cold climate installations require the use of heaters to maintain proper oil viscosity and to eliminate the possibility of snow or ice blocking the Barrier mechanism. Depending on the hydraulic power unit size and rating, Delta supplies heaters ranging from 60 to 500 watts @ 120/240 volts for the oil reservoirs. The hydraulic hoses to the Barriers are to be run below the frost line where temperatures are a relatively constant 45 to 55ºF [7 to 13ºC]. If desired, the ducts carrying these hoses can be heat traced at time of installation.

The Barriers themselves may require heaters, the ratings of which are determined by the length of the Barrier and available operating voltage. Ratings in the range of 1,000 to 2,000 watts are common.

Delta strongly recommends that the entire roadway in the immediate vicinity of the Barriers be heat traced. This is to minimize the chance that a vehicle could lose control or traction in front of the Barriers. Also, in many cases, guard and/or inspection personnel will need to work on a vehicle in front of the Barriers. The heat tracing will reduce the personnel dangers of working on snow and ice.

Copyright 2005 Delta Scientific Corporation
All Rights Reserved

Roadways containing Barriers cannot be plowed. The snow plows will shear top plate bolts and damage inspection covers. Only hand clear snow around the Barriers. Snow removing chemicals such as salt should also not be used around the Barriers as the corrosion of the steel components will be greatly accelerated.

Drainage provisions in Barriers subject to freezing will also need some consideration. Heat tracing of the drain lines and/or sump well heaters may be needed to help remove the melted snow and ice from the Barrier foundations.

Cooling

Barrier installations in areas where the temperatures are frequently above 100ºF [38ºC] should have the hydraulic power units located in temperature controlled equipment rooms or be equipped with oil coolers. The simplest but least effective method is an air cooled heat exchanger. Very large surface areas are required to cool oil to 160ºF [71ºC] when only 130ºF [55ºC] cooling air is available. A more compact installation can be realized if a water cooled heat exchanger is located in the reservoir tank. Typically, less than one gallon per minute [4 liters per minute] of water at 100ºF [38ºC] or less is required. If the water stream can be returned to a cooling tower or other closed loop system, no waste of water is incurred.

Sand and Dust

Barrier locations in sand or dust areas require a few additional precautions. The hydraulic power units should be mounted in equipment rooms that can be pressurized to maintain positive air flow out of the room. This minimizes the accumulation of sand, dust and other abrasive materials on the hydraulic equipment where it could find its way into the oil and sensitive mechanical devices. Filter and fluid changes may be more frequent than at other installations.

Barriers in sand swept areas may need to have the foundation frames cleaned frequently. This is usually accomplished by using an industrial type vacuum to sweep out the accumulated debris. Sand accumulation can be minimized by placement of suitable fences or walls around the Barrier area.

Drainage

Drainage and protection against subsurface water is important. A bed of aggregate under the Barrier(s) will handle rain water in most circumstances. Especially wet locations should have the Barrier provided with a drain line plumbed to a sump well or sewer as appropriate.

While the machine is designed for harsh environments, prolonged submersion will eventually cause both appearance and operating deterioration.

Corrosion

Very occasionally a site is both wet and unfriendly, i.e., either highly acid or basic. In these cases, anodic protection is recommended. Delta will be happy to review specific job locations and make suitable recommendations where such protection is needed.

Copyright 2005 Delta Scientific Corporation
All Rights Reserved

Interconnect

Provisions for electrical and hydraulic feed should be made prior to pouring the foundation of the Barrier.

The access area of the Barrier is provided with a 3.5" IPS pipe sleeve. We recommend that 3" PVC pipe be run from the hydraulic power unit to this sleeve to provide a conduit through which hoses can be pulled. Alternately, rigid steel pipe can be run from the HPU to the Barrier directly buried in the ground. See the Mechanical System Theory section of this manual for a discussion of the various ways to interconnect the Barrier with the HPU.

Access to the optional fully up and fully down limit switches, heaters and front face light conduits are also in the access box. Rigid metallic conduit or equal is to be run to them. Be sure that appropriate fittings are used that will allow wire to be pulled. It is too late to correct this error after the concrete is poured!

Concrete Notes and Specifications Note, these are *minimum* requirements only. You may exceed these requirements with no reduction in the rating of the equipment.

1) Contractor shall verify and be responsible for all dimensions and conditions at the job site.

2) Foundation concrete may be placed directly into neat excavations, provided the sides of the excavation are stable. Where caving occurs, provide shoring. Type and method of shoring shall be at the contractor's option.

3) The excavation shall be kept dry at all times. Groundwater, if encountered, shall be pumped from the excavation.

4) Concrete shall be laboratory designed, machine mixed, producing 3,000 psi [20,68 Mpa] at 28 days.

5) Cement shall be tested Portland cement conforming to ASTM C150, Type I or II.

6) Aggregates shall conform to ASTM C33. Maximum size of aggregate shall be 1.5 inch [38 MM].

7) Reinforcing steel shall be deformed bars conforming to ASTM A615, Grade 60 (60,000 psi [413,7 Mpa]).

8) Hooks and bends shall conform to AIC Standard 318, latest revision. Inside diameter of hooks and bends shall be at least 6 bar diameters.

9) Provide spacer bars, chairs, spreaders, blocks, etc, as required to positively hold the steel in place. All dowels shall be firmly wired in place before concrete is poured.

10) Concrete shall be conveyed from the mixer to final deposit by methods that will prevent separation or loss of materials. Troughs, buckets or the like may be used to convey concrete. In no case shall concrete be allowed to free drop more than 5 feet [1,5 M].

Copyright 2005 Delta Scientific Corporation
All Rights Reserved

11) Concrete shall be thoroughly consolidated by suitable means during placement and shall be thoroughly worked around reinforcement, embedded fixtures and into corners of forms.

12) Concrete shall be maintained above 50ºF [10ºC] and in a moist condition for at least 7 days after placement. Adequate equipment shall be provided for heating concrete materials and protecting concrete during freezing or near freezing weather.

13) Where exterior wall face requires shoring and/or forming, the forms shall be substantial and sufficiently tight to prevent leakage. Forms shall not be removed until the concrete is 7 days old.

14) Backfilling shall be done by depositing and tamping into place clean sand or pouring lean concrete. Water jetting shall not be allowed.

15) Conduits and pipes of aluminum shall not be embedded in concrete unless effectively coated or covered to prevent aluminum/concrete reaction or electrolytic action between aluminum and steel.

16) Construction joints not indicated on the drawings shall not be allowed. Where a construction joint is to be made, the surface of concrete shall be thoroughly cleaned and all laitance and standing water removed.

17) Contractor shall be responsible for the protection of all adjacent areas against damage and shall repair or patch all damaged areas to match existing improvements.

18) Contractor shall keep the construction area clean at all times and at completion of work remove all surplus materials, equipment and debris and leave the premises in a clean condition acceptable to the owner or owner's representative.

Copyright 2005 Delta Scientific Corporation
All Rights Reserved

DELTA

ELECTRICAL & CONTROLS
INSTALLATION INSTRUCTIONS
VEHICLE ARREST SYSTEM

COPYRIGHT 1991 DELTA SCIENTIFIC CORPORATION

ALL RIGHTS RESERVED

MFG. UNDER U.S. PATENT #4,097,170 4,158,514 4,318,079 4,354,771 4,490,068 4,576,508 4,715,742

U.K. PATENT # GB 2,127,893B 2,138,883B

40355 DELTA LANE • PALMDALE, CALIFORNIA 93551, USA • PHONE (661) 575-1100 • FAX (661) 575-1109

E-MAIL: info@deltascientific.com

Doc #100-35 P-2

DELTA SCIENTIFIC CORPORATION
40355 DELTA LANE
PALMDALE, CALIFORNIA 93551, USA

PHONE 661-575-1100
FAX 661-575-1109
E-MAIL info@deltascientific.com

ELECTRICAL CONNECTION CHART

NUMBER OF BARRICADES: TWO MODEL TT/DSC SERIES PHALANX BARRIERS OPERATING INDEPENDENTLY

CONTROL AND OPTIONS: STANDARD 24 VDC CONTROL

MASTER CONTROL PANEL (OPTIONAL)
SLAVE CONTROL PANEL (OPTIONAL)
EMERGENCY OPERATE CIRCUIT (OPTIONAL)
ANNUNCIATOR CIRCUIT (OPTIONAL)
SAFETY LOOP DETECTOR, MODEL 3546 (OPTIONAL)
STOP/GO SIGNAL LIGHTS, MODEL MPL-10 (OPTIONAL)
STOP/GO SIGNAL GATE, MODEL AG812 (OPTIONAL)

REFERENCE CIRCUIT DRAWINGS:

905xx	HYDRAULIC POWER UNIT, DUAL BARRIER
906x0-2	CONTROL CIRCUIT AND MOTOR STARTER, 120-240/24 VDC, DUAL
90605	MAIN BOARD LOGIC DIAGRAM
907x2	CONTROL PANEL, DUAL BARRIER
908x2	SLAVE CONTROL PANEL, DUAL BARRIER

The following charts have been prepared to assist in the ELECTRICAL INTERCONNECT of the HYDRAULIC POWER SYSTEM, THE SYSTEM CONTROL CIRCUITS, THE REMOTE CONTROL/STATUS PANELS (MASTER AND SLAVE), AND VARIOUS OPTIONS offered with DELTA BARRICADE SYSTEMS. These CHARTS are designed to supplement the detailed circuit drawings which are furnished with each system.

The voltage carried by each conductor, unless otherwise specified, is 24 VDC. These conductors are indicated by this symbol ">>>>>>>>>". The maximum power at this voltage is 250 watts for hot/neutral wires, 1 watt for device wires. Where the voltage is other than 24 VDC, the conductor is indicated by this symbol ">>>>>> * >>>>>>" and a footnote specifies the voltage and current requirement. Either multi-conductor cable or single conductor wire can be used at the option of the installer. The wire size should be selected based on the pull length, current and voltage requirements and local codes and specifications.

Terminals are designated by a PCB board number followed by two letters followed by the terminal number, i.e. 1 CB 11. The first number is PCB Board number, in this case Barrier # 1, the first letter is the strip location, in this case "control circuit", while the second letter defines the terminal voltage. `A' and some 'C' codes are low voltage 24 VDC. Some 'B' & 'C' codes are the specified local control voltage.

Copyright 2010 Delta Scientific Corporation
All Rights Reserved

DELTA SCIENTIFIC CORPORATION
40355 DELTA LANE
PALMDALE, CALIFORNIA 93551, USA

PHONE 661-575-1100
FAX 661-575-1109
E-MAIL info@deltascientific.com

ELECTRICAL CONNECTION CHART

****

CONNECTION POINTS BETWEEN THE BARRIERS AND THE CONTROL CIRCUIT (DRAWING NO. 906x0-2 & 90605).

BARRIER		CONTROL CIRCUIT
Limit Switch Barrier # 1		
Common Terminal	>>>>>>>>>>>>>>>>	1 CA 11
Norm. Opened (Down)	>>>>>>>>>>>>>>>>	1 CA 12
Common Terminal	>>>>>>>>>>>>>>>>	1 CA 16
Norm. Opened (Up)	>>>>>>>>>>>>>>>>	1 CA 17
Limit Switch Barrier # 2		
Common Terminal	>>>>>>>>>>>>>>>>	2 CA 11
Norm. Opened (Down)	>>>>>>>>>>>>>>>>	2 CA 12
Common Terminal	>>>>>>>>>>>>>>>>	2 CA 16
Norm. Opened (Up)	>>>>>>>>>>>>>>>>	2 CA 17

* Load per limit switch is 0.6 watts.

BARRIER FRONT FACE LIGHTS (OPTIONAL)		CONTROL CIRCUIT
Lights Barrier # 1		
Lights Hot Terminal	>>>> 12 VDC + >>>>	1 CB 23
Common Neutral Terminal	>>>> 12 VDC - >>>>	1 CB 24
Lights Barrier # 2		
Lights Hot Terminal	>>>> 12 VDC + >>>>	2 CB 23
Common Neutral Terminal	>>>> 12 VDC - >>>>	2 CB 24

* Load per Barrier Front Face Light Set is 5 watts @ 12 VDC (from 12 V voltage regulator).

Copyright 2010 Delta Scientific Corporation
All Rights Reserved

DELTA SCIENTIFIC CORPORATION
40355 DELTA LANE
PALMDALE, CALIFORNIA 93551, USA

PHONE 661-575-1100
FAX 661-575-1109
E-MAIL info@deltascientific.com

ELECTRICAL CONNECTION CHART

****

CONNECTION POINTS BETWEEN THE LOOP SAFETY DEVICES AND THE CONTROL CIRCUIT (DRAWING NO. 906x0-2 & 90605). **NOTE:** IF NO LOOP DETECTOR SAFETY DEVICES ARE USED, JUMPER THESE TERMINALS.

LOOP SAFETY DEVICE		CONTROL CIRCUIT
Loop Detector, Barrier # 1 (Contact is shown for no vehicle 'call')		
Common Terminal	>>>>>>>>>>>>>>>	1 CA 5
Normally Closed Terminal	>>>>>>>>>>>>>>>	1 CA 6

Note: Jumper terminal 1 CA 5 to terminal 1 CA 6 if no loop detector safety device is used.

Loop Detector, Barrier # 2 (Contact is shown for no vehicle 'call')		
Common Terminal	>>>>>>>>>>>>>>>	2 CA 5
Normally Closed Terminal	>>>>>>>>>>>>>>>	2 CA 6

Note: Jumper terminal 2 CA 5 to terminal 2 CA 6 if no loop detector safety device is used.

* Load per loop detector safety device is 0.6 watts.

Copyright 2010 Delta Scientific Corporation
All Rights Reserved

DELTA SCIENTIFIC CORPORATION
40355 DELTA LANE
PALMDALE, CALIFORNIA 93551, USA

PHONE 661-575-1100
FAX 661-575-1109
E-MAIL info@deltascientific.com

ELECTRICAL CONNECTION CHART

****

STOP/GO SIGNAL LIGHTS

CONNECTION POINTS BETWEEN THE CONTROL CIRCUIT (DRAWING NO. 906x0-2 & 90605) AND ONE OR MORE STOP/GO TRAFFIC LIGHTS.

This circuit synchronizes the stop/go lights with either of the Barriers. As soon as a Barrier starts to rise the red "stop" light comes on and stays on until the Barrier has been lowered and is fully down. The green "go" light comes on at this point.

STOP/GO SIGNAL LIGHTS		CONTROL CIRCUIT
Signal Lights for Barrier # 1		
Supply Voltage (Note 3)	>>>> Note 2 >>>>	1 CB 1
Supply Voltage (Note 3)	>>>> Note 2 >>>>	1 CB 2
Common Terminal	>>>> Note 2 >>>>	1 CB 3
Signal Green Light	>>>> Note 1 >>>>	1 CB 4
Signal Red Light	>>>> Note 1 >>>>	1 CB 5
Signal Lights for Barrier # 2		
Supply Voltage (Note 3)	>>>> Note 2 >>>>	2 CB 1
Supply Voltage (Note 3)	>>>> Note 2 >>>>	2 CB 2
Common Terminal	>>>> Note 2 >>>>	2 CB 3
Signal Green Light	>>>> Note 1 >>>>	2 CB 4
Signal Red Light	>>>> Note 1 >>>>	2 CB 5

Note 1: These lines must be sized to handle one 40 Watts (maximum) incandescent bulb operating at the AC Control Voltage. If back to back lights are used, twice the current must be handled.

Note 2: If the commons are combined, the total of all currents must be considered.

Note 3: The supply voltage is applied at terminals 1 CB 1 (Hot) and 1 CB 2 (Neutral). This voltage can be whatever the signal lights require. If the lights are to be operated on 24 VDC, customer must insure when using the Delta power supply, the power supply rating is not exceeded.

Copyright 2010 Delta Scientific Corporation
All Rights Reserved

DELTA SCIENTIFIC CORPORATION
40355 DELTA LANE
PALMDALE, CALIFORNIA 93551, USA

PHONE 661-575-1100
FAX 661-575-1109
E-MAIL info@deltascientific.com

ELECTRICAL CONNECTION CHART

****

STOP/GO SIGNAL GATE, MODEL AG812

ADDITIONAL CONNECTION POINTS BETWEEN THE CONTROL CIRCUIT (DRAWING NO. 906x0-1 & 90605) AND THE STOP/GO SIGNAL GATE MODEL AG812.

The Stop/Go Signal Gate Model AG812 is designed to have its motion coordinated with its companion Barrier. Upon raising the Barrier, the Signal Gate will lower to provide visual indication to drivers to stop. The Signal Gate will remain in the down position until the Barrier is again lowered to the full down position at which point the Barrier's down limit switch will cause the Signal Gate to raise.

STOP/GO SIGNAL GATE		CONTROL CIRCUIT
Signal Gate for Barrier # 1		
1 Terminal 12	>>>> Note 1 >>>>	1 CB 10
1 Terminal 14	>>>> Note 1 >>>>	1 CB 11
Signal Gate for Barrier # 2		
2 Terminal 12	>>>> Note 1 >>>>	2 CB 10
2 Terminal 14	>>>> Note 1 >>>>	2 CB 11

Note 1: The Model AG812 Signal Gates have the local control voltage brought to terminals L1 and L2. Signal Gate jumpers are on terminals CA 3 and CA 5 (changed from terminals CA 4 and CA 5).

Copyright 2010 Delta Scientific Corporation
All Rights Reserved

DELTA SCIENTIFIC CORPORATION
40355 DELTA LANE
PALMDALE, CALIFORNIA 93551, USA

PHONE 661-575-1100
FAX 661-575-1109
E-MAIL info@deltascientific.com

ELECTRICAL CONNECTION CHART

****

CONNECTION POINTS BETWEEN THE CONTROL CIRCUIT (DRAWING NO. 906x0-2 & 90605) AND THE MASTER CONTROL PANEL (DRAWING NO. 907x2).

REMOTE CONTROL PANEL		CONTROL CIRCUIT
1 MA 3 (+)	>>>>>>> Note 2 >>>>>>>	1 CA 3 + (HOT) Note 1
1 MA 18 (-)	>>>>>>> Note 2 >>>>>>>	1 CA 18 - (NEUTRAL) Note 1
1 MA 4 (#1 Close)	>>>>>>>>>>>>>>>>>>>>	1 CA 4
1 MA 8 (#1 Open)	>>>>>>>>>>>>>>>>>>>>	1 CA 8
1 MA 14 (#1 Emergency)	>>>>>>> Note 2 >>>>>>>	1 CA 14
1 MA 15 (#1 Emerg. Reset)	>>>>>>> Note 2 >>>>>>>	1 CA 15
1 MA 19 (#1 Clear)	>>>>>>>>>>>>>>>>>>>>	1 CA 19
1 MA 20 (#1 Not Clear)	>>>>>>>>>>>>>>>>>>>>	1 CA 20

For the second Barrier, add:

2 MA 3 (+)	>>>>>>> Note 2 >>>>>>>	2 CA 3 + (HOT) Note 1
2 MA 18 (-)	>>>>>>> Note 2 >>>>>>>	2 CA 18 - (NEUTRAL) Note 1
2 MA 4 (#2 Close)	>>>>>>>>>>>>>>>>>>>>	2 CA 4
2 MA 8 (#2 Open)	>>>>>>>>>>>>>>>>>>>>	2 CA 8
2 MA 14 (#2 Emergency)	>>>>>>> Note 2 >>>>>>>	2 CA 14
2 MA 15 (#2 Emerg. Reset)	>>>>>>> Note 2 >>>>>>>	2 CA 15
2 MA 19 (#2 Clear)	>>>>>>>>>>>>>>>>>>>>	2 CA 19
2 MA 20 (#2 Not Clear)	>>>>>>>>>>>>>>>>>>>>	2 CA 20

Note 1: Size neutral and hot for 50 watts (maximum). All other lines are 1 watts each.

Note 2: The terminals 1 MA and 2 MA for these lines are jumpered at the factory; 1 MA 3 to 2 MA 3, 1 MA 18 to 2 MA 18, etc. A jumper will be required between the circuit boards in the control circuit.

Copyright 2010 Delta Scientific Corporation
All Rights Reserved

DELTA SCIENTIFIC CORPORATION
40355 DELTA LANE
PALMDALE, CALIFORNIA 93551, USA

PHONE 661-575-1100
FAX 661-575-1109
E-MAIL info@deltascientific.com

ELECTRICAL CONNECTION CHART

****

CONNECTION POINTS BETWEEN THE SLAVE PANEL (DRAWING NO. 908x2) AND THE MASTER PANEL (DRAWING NO. 907x2) OR THE CONTROL CIRCUIT (DRAWING NO. 906x0-2 & 90605). (See Note 1)

SLAVE REMOTE PANEL		MASTER REMOTE PANEL		CONTROL CIRCUIT
1 SA 4	>>>>>>>>>>>>>>	1 MA 4	>>>>>>>>>>>>>	1 CA 4
1 SA 8	>>>>>>>>>>>>>>	1 MA 8	>>>>>>>>>>>>>	1 CA 8
1 SA 14	>>>> Note 3 >>>>	1 MA 14	>>>>>>>>>>>>>	1 CA 14
1 SA 15	>>>> Note 3 >>>>	1 MA 15	>>>>>>>>>>>>>	1 CA 15
1 SA 18	>>>> Note 3 >>>>	1 MA 18	>>>>>>>>>>>>>	1 CA 18
1 SA 19	>>>>>>>>>>>>>>	1 MA 19	>>>>>>>>>>>>>	1 CA 19
1 SA 20	>>>>>>>>>>>>>>	1 MA 20	>>>>>>>>>>>>>	1 CA 20
1 SA 27	>>>> Note 3 >>>>	1 MA 27	Annunciator - Note 2	
1 SA 28	>>>> Note 3 >>>>	1 MA 28	+ Hot - Note 2	
For the second Barrier, add:				
2 SA 4	>>>>>>>>>>>>>>	2 MA 4	>>>>>>>>>>>>>	2 CA 4
2 SA 8	>>>>>>>>>>>>>>	2 MA 8	>>>>>>>>>>>>>	2 CA 8
2 SA 14	>>>> Note 3 >>>>	2 MA 14	>>>>>>>>>>>>>	2 CA 14
2 SA 15	>>>> Note 3 >>>>	2 MA 15	>>>>>>>>>>>>>	2 CA 15
2 SA 18	>>>> Note 3 >>>>	2 MA 18	>>>>>>>>>>>>>	2 CA 18
2 SA 19	>>>>>>>>>>>>>>	2 MA 19	>>>>>>>>>>>>>	2 CA 19
2 SA 20	>>>>>>>>>>>>>>	2 MA 20	>>>>>>>>>>>>>	2 CA 20
2 SA 27	>>>> Note 3 >>>>	2 MA 27	Annunciator - Note 2	
2 SA 28	>>>> Note 3 >>>>	2 MA 28	+ Hot - Note 2	

Note 1: The Slave can be fed from either the Master or from the Control Circuit. If the Slave is fed from the Master, then connect as shown in the two left columns above. If the Slave is fed from the Control Circuit use the left and right columns as shown above.

Note 2: These connections must be made directly from the Slave Remote to the Master Remote. The routing can be made through the Control Circuit on a spare terminal if this is more convenient.

Note 3: The terminals 1 SA and 2 SA for these lines can be commoned. A jumper will be required between the circuit boards in the control circuit.

Copyright 2010 Delta Scientific Corporation
All Rights Reserved

DELTA SCIENTIFIC CORPORATION
40355 DELTA LANE
PALMDALE, CALIFORNIA 93551, USA

PHONE 661-575-1100
FAX 661-575-1109
E-MAIL info@deltascientific.com

ELECTRICAL CONNECTION CHART

****

CONNECTION POINTS BETWEEN THE CONTROL CIRCUIT (DRAWING NO. 906x0-2 & 90605) AND THE HYDRAULIC POWER UNIT. NOTE: THESE CONNECTIONS HAVE BEEN MADE AT THE FACTORY BUT ARE SHOWN HERE AS AN AID TO TROUBLE SHOOTING.

CONTROL CIRCUIT		HYDRAULIC POWER UNIT
BARRIER # 1		**VALVE SOLENOIDS**
1 CB 17	>>>> Note 1 >>>>	UP
1 CB 18	>>>> Note 1 >>>>	UP COMMON
1 CB 19	>>>> Note 1 >>>>	DOWN
1 CB 20	>>>> Note 1 >>>>	DOWN COMMON
1 CB 21	>>>> Note 2 >>>>	EMERGENCY OPERATE
1 CB 22	>>>> Note 2 >>>>	EO COMMON
BARRIER # 2		
2 CB 17	>>>> Note 1 >>>>	UP
2 CB 18	>>>> Note 1 >>>>	UP COMMON
2 CB 19	>>>> Note 1 >>>>	DOWN
2 CB 20	>>>> Note 1 >>>>	DOWN COMMON
2 CB 21	>>>> Note 2 >>>>	EMERGENCY OPERATE
2 CB 22	>>>> Note 2 >>>>	EO COMMON
MOTOR CONTROL CIRCUIT		
CC 8 (CC 18)	>>>> Note 3 >>>>	LEVEL SWITCH
CC 9 (CC 19)	>>>> Note 3 >>>>	LEVEL SWITCH/PRESSURE SWITCH
CC 10 (CC 20)	>>>> Note 3 >>>>	PRESSURE SWITCH

Note 1: These lines must be sized to carry 30 watts at 24 VDC.

Note 2: These lines must be sized to carry 20 watts at 24 VDC.

Note 3: Starter coil power consumption is less than 100 va inrush, and less than 10 va sealed.

Copyright 2010 Delta Scientific Corporation
All Rights Reserved

DELTA SCIENTIFIC CORPORATION
40355 DELTA LANE
PALMDALE, CALIFORNIA 93551, USA

PHONE 661-575-1100
FAX 661-575-1109
E-MAIL info@deltascientific.com

ELECTRICAL CONNECTION CHART

****

CONTROL CIRCUIT

The Control Circuit is fed from the customer's local AC control voltage supply (either 100-120/1/50-60 or 200-240/1/50-60). Connection is to terminals CC 1(+) and CC 2(-). Supply should be adequate to provide a minimum of 250 Watts of power.

The control circuit contains a power supply, which reduces the local voltage to 24 VDC for use on the remote control panels. The feed out of the control circuit for these remotes is on terminal CA 1(+) and CA 2(-). Standard power capability is 150 watts. Battery back up power supply/charger and batteries are optionally available.

Note: Use caution when installing the field conduits and wiring to the control circuit enclosure. Shield metal chips and wire fragments from falling on to or in to components. Component failure can be caused by careless installation.

POWER UNIT MOTORS

The motor has been ordered and supplied to the actual site voltage. Please confirm before hookup. The motor is factory wired to an automatic starter controlled by the hydraulic power unit pressure switch, oil level switch and (optional) three phase power monitor. Thermal overload protection is integrally provided.

The customer should provide branch circuit protection as required by national and local code. Care should be taken in arriving at the correct wire size for the length of cable provided.

HYDRAULIC POWER UNIT WIRING

The three phase power is brought into the HPU terminal box to the line side of the door mounted disconnect switch at L1, L2 and L3.

Verify that the motor runs in the correct direction. Units with phase monitors (three phase only) are factory set to run in the correct direction. If motor does not run, or runs in the wrong direction, reverse any two incoming wires at L1, L2 or L3; motor should now run and in the correct direction.

Power for the starter contactor coil is the same as the primary voltage of the control circuit. Coil voltage legend plates are on the starter so that this can be confirmed. Connection points for the coil power are 'CC 1(+)' and 'CC 2(-)'. Starter coil power consumption is less than 100 va inrush, and less than 10 va sealed.

Copyright 2010 Delta Scientific Corporation
All Rights Reserved

DELTA SCIENTIFIC CORPORATION
40355 DELTA LANE
PALMDALE, CALIFORNIA 93551, USA

PHONE 661-575-1100
FAX 661-575-1109
E-MAIL info@deltascientific.com

ELECTRICAL CONNECTION CHART

****

SNOW MELTING HEATERS

The system may be furnished with electric heaters for the purpose of melting snow and ice which may otherwise freeze the Barrier in either the up or down position.

The hydraulic oil reservoir may also be equipped with an immersion heater located within the oil level. It is equipped with a thermostat dial and should be set to a value between 60 to 75ºF [15 to 25ºC].

The electric feed to the heaters is fused in the control circuit. See appropriate wiring diagram for the connections.

Important: Before energizing the heater circuits at the start of each season, the elements must be megger tested. This is typically done with a megger capable of delivering 500 volts to the circuit. A value in excess of 50,000 ohms to ground is acceptable for energizing the heater circuits. Call the factory if a lower reading is found.

Failure of the elements will in no way cause the Barrier to malfunction unless there is an ice or snow build up inside the machine.

Copyright 2010 Delta Scientific Corporation
All Rights Reserved

DELTA

MECHANICAL
SYSTEM THEORY
VEHICLE ARREST SYSTEM

COPYRIGHT 1991 DELTA SCIENTIFIC CORPORATION

ALL RIGHTS RESERVED

MFG. UNDER U.S. PATENT #4,097,170 4,158,514 4,318,079 4,354,771 4,490,068 4,576,508 4,715,742

U.K. PATENT # GB 2,127,893B 2,138,883B

40355 DELTA LANE • PALMDALE, CALIFORNIA 93551, USA • PHONE (661) 575-1100 • FAX (661) 575-1109

E-MAIL: info@deltascientific.com

Doc #100-35 P-3

'DELTA' STYLE HYDRAULIC POWER UNITS
TT AND DSC SERIES PHALANX® BARRIERS
THEORY OF OPERATION

Power Source

Delta Scientific Corporation's barricade systems are powered by a hydraulic oil power unit (HPU). This unit is typically mounted remote from the Barrier(s) and attached to them by hoses or steel pipes. The hydraulic power unit provides the tremendous lifting force necessary to raise the heavy steel weldments of the Barriers. The forces generated are in the range of 20,000 to 25,000 pounds for these large Phalanx® Barricades. An industrial grade electric motor drives the hydraulic gear pump to produce the HPU system pressure.

Power Storage

The HPU stores the pressurized hydraulic oil produced by the gear pump in an accumulator. The accumulator thus provides a high pressure reserve of oil available to move or maintain the position of the Barricade. The pressure of the oil in the accumulator is maintained by the automatic cycling of the pump motor on and off between the low and high settings of a pressure switch. It is important to note that the pump motor thus runs independently of any command from the Barrier control panel; if pressure is low the pump motor will run, if the pressure is within bounds (even with the Barrier moving) the pump motor will be off.

In addition to providing the high pressure oil to move the Barriers, the accumulator also acts as a hydraulic spring to cushion the various parts of the hydraulic system during normal operation and when the Barrier is performing its' designed task of arresting vehicles.

Power Access

To move a Barrier we must direct the pressurized oil in the HPU to the appropriate up or down side of a hydraulic cylinder in the Barrier. This is done by shifting a directional valve mounted on the HPU. The shifting is accomplished by energizing one of two electric solenoids on the valve. The valves used by Delta are known as 'two position, electrically actuated, spring detented'. The spring detent allows the valve to remain in the position it was last shifted to without being constantly energized. This saves energy and allows the Barrier to remain in its commanded position <u>even if power is interrupted</u> to the HPU.

Using two or more of these directional valves allows us to independently control two or more Barriers from one HPU. This feature is useful where Barriers are placed in multiple lanes at the entrance of a facility.

Copyright 2010 Delta Scientific Corporation
All Rights Reserved

GOOD HYDRAULIC PRACTICE

Safety Precautions

At all times observe good safety practices when working on either the electrical or mechanical system. Particular attention should be paid to the danger of working on the Barrier when the power is on. The Barrier is a powerful hydraulic press that can easily crush anything in its way. Keep hands free of the mechanism when the power is on or the HPU is up to pressure. Turn off the electric power and bleed the hydraulic pressure down to zero before working on any part of the system. Traffic should be controlled around the Barrier(s) during any work so that vehicular accidents do not occur if the Barrier should happen to rise. After work is complete, do not allow traffic over the Barrier until all control and safety functions have been verified to be properly working.

Cleanliness

To maintain system efficiency and reliability great care must be taken to prevent any form of dirt, sand or grit from entering the hydraulic system. Only new, clean filtered hydraulic oil should be used for charging the unit. Unless specifically ordered as filtered, new oil should be pumped through a 25 micron filter when charging. See **Commercial Hydraulic Oil Interchangeability Chart** for our recommended oils. The tests conducted at the factory on the system have been done with the HPU charged with Shell 'Tellus' 46. This grade is for moderate temperatures and is available in most of the worlds leading cities.

Hydraulic oil is subject to degradation and contamination with age, so follow the recommendations in the Maintenance section of this manual.

Location

The hydraulic power unit should be mounted indoors in a clean, dry location away from excessive heat or cold. As an alternate the unit can be mounted outdoors if provided with a suitable cover designed for the area to exclude moisture or dust as appropriate. While HPU's have been mounted below grade in concrete pits, we do not recommend this as drainage becomes extremely important. A drain backup can cause the power unit to go under water with severe damage resulting. Also, the water condensation found in most pits is detrimental to the HPU components.

It is important that the hydraulic power unit be mounted at approximately the same or higher elevation as the Barrier(s). If the HPU is mounted lower than the Barrier(s), the oil in the lines may repeatedly drain back to tank and make the Barrier motion erratic. The power unit can be at elevation greater than the Barrier(s) if it is understood that breaking a line at the Barrier will cause oil to flow in that direction.

Copyright 2010 Delta Scientific Corporation
All Rights Reserved

System Component Description

The hydraulic power unit (HPU) is assembled on a steel framework, which supports the hydraulic oil reservoir and major components. Provision is made to permit bolting or lagging of the frame to a suitable foundation. See the appropriate General Arrangement drawing for hole and interface dimensions. The power unit has been pre-tested for function and leaks at the factory prior to shipment. Preparation for shipment calls for the draining of the test oil, however, approximately one inch [25 mm] will remain in the tank after draining.

Oil Reservoir Tank

The oil reservoir forms the largest component of the hydraulic power unit. It is integral with the backplate of the skid base and forms the structure to which other components are attached. On the top is mounted the filler breather cap by which oil can be added to the tank. The capacity of the reservoir is nominally 20 gallons [75 liters]. This is also approximately the charge of oil that will be required to fill the lines and hydraulic cylinders of the Barriers.

The tank's level is indicated by a sight glass on its' front face. The reservoir should only be filled with the hydraulic system pressure at zero, otherwise overflowing can occur as a result of oil being displaced out of the accumulator. The proper oil level is within 1 inch [25 mm] of the sight glass top at zero system pressure.

The reservoir tank holds the suction strainer on the pump suction line and also provides the mounting for return line filter. A oil level switch is provided to shut the pump/motor off should oil loss threaten pump failure. A reservoir heater can be supplied if the ambient temperature so dictates.

Drains are furnished at tank bottom (both sides) for removing water and/or changing fluids. This should be done at the intervals directed in the **Maintenance** section. A removable cover is provided for clean out and access to the components inside.

Gear Pump/Check Valve

The gear pump is mounted on a motor adapter and attached to the motor drive shaft by a flexible coupling. The set screws in the coupling halves should be checked for tightness on the pump and motor shafts prior to start up. The pump seals, as are all other HPU component seals, are Buna-N. A check valve is located at the pump. Its purpose is to prevent the pressurized oil in the high pressure side of the unit from running back through the pump after the motor shuts off. If it were to fail you would likely see the fan on the pump motor run backwards and the system pressure fall until zero.

Do not start the pump/motor until oil has been put into the reservoir. The pump can only be run dry for a few seconds before damage to the gears and the housing occurs. The suction line to the pump is provided with a shutoff valve to facilitate maintenance. This valve must be fully open at all times except when replacing the pump. A closed pump shutoff valve can destroy the pump in seconds.

Copyright 2010 Delta Scientific Corporation
All Rights Reserved

Motor

The motor is mounted horizontally and bolted to the HPU framework as will as to the other side of the pump/motor adapter. It is a totally enclosed fan cooled (TEFC) design, three phase. The motor voltage and rating is shown on its nameplate; as a multi winding motor is furnished, the as wired voltage is shown on the Delta motor placard attached to the motor starter enclosure.

Motor/pump direction of rotation is critical. A direction arrow decal is provided. The motor must run in this direction when site power is brought to the HPU skid. If the motor does not run in the proper direction on startup, reverse any two incoming wires to the control circuit disconnect switch.

Phase Monitor (Optional)

An optional phase (voltage) monitor may be supplied to protect the motor from improper phasing, phase loss, or low voltage. The monitor will drop out the motor starter circuit if the three phase power is phased wrong or if the voltage is too low. The unit has been properly phased at the factory. If the motor does not run on initial startup, reverse any two incoming wires to the control circuit. The motor should now run and in the correct direction.

Magnetic Motor Starter/Overload

Site voltage is fed to the line side of the motor starter/thermal overload. See voltage placard attached to the starter enclosure for the **as wired** voltage and motor starter circuit drawing number. The feed to the HPU should be controlled from an appropriately sized circuit breaker/disconnect switch and the wires sized properly to prevent excessive voltage drop from the disconnect to the HPU skid. Motors should not be allowed to run at voltages exceeding +/- 10 percent of their ratings. This could lead to tripping of the thermal overloads or substantial damage to the motor and control circuit components.

The thermal overload is calibrated for the anticipated full load amperage of the motor at run voltage, this setting should be confirmed before start up (the amperage dial of the overload should be set for the full load amps labeled on the motor nameplate). The overload should be in the **MANUAL** position, automatic reset could cause equipment failure if a fault is not corrected in a timely manner.

A voltage/phase monitor may optionally be furnished. In addition to protecting the pump against improper rotation, it will shutdown the motor starter circuit if phase loss/reversal or low voltage is detected.

Accumulator

The accumulator is a large cylindrical pressure vessel that provides the high pressure reserve of oil used to move the Barriers and keep them in position. In addition, the oil stored in the accumulator is available to move the Barrier(s) even if the pump/motor should be inoperable. The amount of oil directed out to the Barrier(s) is not limited by the displacement rate of the hydraulic gear pump but by the oil stored in the accumulator.

Copyright 2010 Delta Scientific Corporation
All Rights Reserved

An accumulator is divided into two sides by a piston (piston accumulator). On the top side, the accumulator contains dry nitrogen gas pre-pressurized (precharged) at the factory at a level determined by the type of Barriers on your order. The fittings and seals on the nitrogen fill connection should be kept tight to prevent loss of this precharge. A special tool is available from Delta Scientific to check the precharge pressure and facilitate recharging if that should become necessary. Precharge should be checked every six months (see **Maintenance** section of this manual). The pump/motor should not be run if there is no precharge, damage to the accumulator could result. Only dry nitrogen should be used for precharge, air or other gases could cause the accumulator vessel to explode. Precharge should only be done at zero hydraulic pressure or an incorrect precharge pressure will result.

The other side of the accumulator contains the system hydraulic oil. At zero hydraulic oil pressure there is little or no oil in the accumulator, the piston is down hard on the oil outlet. As the pump/motor runs, oil accumulates on the oil side at the pressure indicated by the system pressure gage (oil side). This pressure gage will read the precharge indirectly by jumping to the precharge value on motor startup then slowly running up to the shut off pressure. It is important to note that at shut off, only a portion of the accumulator contains oil, the piston has been pushed back to compress the nitrogen gas which is now also at the shutoff pressure. It is the compressed gas that provides the 'spring' to move oil out of the accumulator and to the cylinders of the Barrier.

When performing accumulator maintenance it is necessary to bring the oil side pressure to zero. Large oil loss can occur if fittings are tampered with while under pressure.

Pressure Switch

The pressure at which the oil side is maintained is determined by a pressure switch mounted on the high pressure (pump or accumulator) side of the system. The switch is factory set for the proper shutoff pressure of 1900 psig [131 bar] and has a 500 psig [34 bar] 'dead-band'. This means that the pressure will fall approximately 500 psi [34 bar] after shutoff (about 1400 psig [97 bar]) before the switch closes to restart the pump motor. These settings should be indicated on the motor starter drawing and noted in the pressure log in the **Maintenance** section. The electric side of the switch is terminated on a terminal strip in the motor starter enclosure.

Pressure Gage

A pressure gage is provided to indicate the hydraulic oil pressure of the system. It does not indicate the accumulator precharge except as noted in the **Accumulator** paragraph of this section. The gage is liquid filled with glycol to eliminate needle bounce and a vent is thus provided to allow the case to breath, preventing case blow out. Upon receipt, remove vent seal plug/label.

This gage must read zero when working on the HPU pressure lines and fittings or large oil loss can occur. A gentle tapping on the gage glass will provide the most accurate readings.

Pressure Relief Valve

A pressure relief valve is provided should the high pressure switch fail to shut off the pump motor. The relief valve is typically set 200 to 250 psig [14 to 17 bar] higher than the high pressure switch. When the pressure relief valve opens, oil is allowed to circulate from the pressure side of the

Copyright 2010 Delta Scientific Corporation

All Rights Reserved

system to the tank/motor suction. The motor horse power is thus being turned to heat across this valve which could cause component damage if allowed to operate uncorrected. The operators or guards should thus report to the person in charge of Barrier maintenance if they note the HPU constantly running.

An open pressure relief valve will cause a hissing sound and if the motor is not running, a falling pressure gage would be noted. See the **Mechanical Trouble Shooting** section if the relief valve does not reseat on pressure reduction.

The pressure relief valve should in no case be set higher than 1.1 times the pressure rating of the minimum rated component in the Barrier system. Please note that most components are designed with a 4 to 1 safety factor, thus the burst pressure of a 2500 psig [172 bar] rated hose would be 10,000 psig [690 bar].

Low Level Switch

As noted above, an oil reservoir low level switch is provided to shut down the pump/motor if the reservoir level drops to the point where the suction of the pump could become uncovered. The gear pump can only run dry for a few seconds before severe wear occurs on the gears and its' housing. Causes of low level are slow system leaks and catastrophic failure of the pressure lines or hoses.

Oil Filter

A return filter element is furnished to filter the oil as it is being returned to the oil reservoir. The oil filter housing is only rated at 150 psig [10 bar] or less as the oil in the return line has only to overcome the pressure drop through the filter itself. If the filter should become clogged with dirt from the system a bypass check valve inside the filter will open and allow the dirty oil to circulate back to the reservoir. For this reason regular filter maintenance is a must. See the **Maintenance** section for details.

Directional Control Valve

A solenoid actuated directional control valve is provided to direct the high pressure oil to the up or down side of the Barrier cylinder(s). One or more (depending on the number of Barriers to be controlled) are mounted on an aluminum manifold bolted to the back plate on the oil reservoir. When the 'up' side is energized, the valve connects the high pressure (P) side of the manifold to the (B) output port of the manifold. The tank return line (T) is simultaneously connected to the (A) output port. When the 'down' side is energized, the manifold (P) side is connected to the (A) port and the (T) side is connected to the (B) port.

The directional valve is equipped with pin extensions mounted on the solenoid ends so that the valve spool can be manually shifted by inserting a pin with a diameter of approximately 0.125 inch [3 mm]. As described above in the **Power Access** paragraph, the valve has spring detents so that it remains in the last commanded position until moved by the electric solenoids or the override pins. See the applicable 'Hydraulic Valve Connection' drawing.

Copyright 2010 Delta Scientific Corporation
All Rights Reserved

The spool of the valve is designed to provide 'closed center ports' so that if the valve malfunctions and does not fully shift, the ports will be closed to one another. Note that these valves require clearance between the spool and the valve body to properly function, thus some leakage from pressure to tank is to be expected. Excessive valve wear will eventually cause the pump/motor to cycle on and off several times per minute even when the Barriers are not moving. Replacement or rebuilding of the affected valve will then be required.

The convention used on all Delta Barrier systems regarding the directional control solenoid valves is as follows:

Directional Control Solenoid Numbering: Valve one (station one) is the bottom most valve on the manifold with the station number increasing to the top of the valve stack.

Color Codes:

Side/Solenoid	Wire Color	Function
Left/'B'	Black	UP
Right/'A'	Red	DOWN
---	White	COMMON
---	Green	GROUND

The valve is held to the manifold with high tensile cap screws. Buna-N O-rings are used to seal the valve port face to the manifold. It is imperative that the mating faces be clean and all 'O' rings in place and lightly lubricated with hydraulic oil before evenly torquing the cap screws.

Valve mounting screw torque:

NFPA DO1/ISO 03 40 to 50 in-lbs [5 to 6 N-M]

Speed Control Valves

Each directional valve station has speed control valves to control the normal up and down speed of the Barrier. They are located in the B line before the B hose. These large Barriers are furnished with two flow control valves (a flow control valve is a needle valve with and check valve integrally plumbed across the needle) mounted back to back to provide independent control of the up and down speed.

The Delta convention on flow control valves is that the 'up' speed is adjusted on the valve nearest to the directional valve manifold. The 'down' speed is adjusted on the valve nearest the Barrier. Clockwise turning of the adjustment knob is slower (valve closing), faster speed is gained by opening the valve (counter-clockwise). The valve should be locked with the set screw provided after adjustment.

Emergency Fast Operate (EFO) Valve (Optional)

Some systems are equipped with optional emergency fast operate (EFO) bypass valves. These solenoid valves when energized directly connect the high pressure (P) side of the HPU to the up side of the Barrier cylinder(s). This bypasses the normal Barrier speed control valves and allows

Copyright 2010 Delta Scientific Corporation

All Rights Reserved

the Barrier to rise at its' maximum possible speed. The valve is 'cartridge' style and is mounted in an aluminum body plumbed from the (P) side of the system to the (B) output port immediately before the (B) hose.

Should it become necessary to replace an EFO valve cartridge, the following mounting torques apply:

Solenoid Coil Retaining Nut	60 in-lbs [7 N-M]
Cartridge to Body	420 in-lbs [48 N-M]

Auxiliary Emergency Fast Operate Valve (Optional)

Some systems are equipped with an optional additional accumulator separated from the primary accumulator by an auxiliary emergency fast operate valve. This solenoid valve allows oil to be charged into the auxiliary accumulator and held in reserve until the 'emergency fast operate valve' is actuated. The valve then releases high pressure oil to the P side of the system, even if the primary accumulator has been exhausted. The valve is very similar to the normal EFO valve except that it is equipped with a manual override pin so that the auxiliary accumulator can be bleed down prior to performing maintenance.

Should it become necessary to replace an auxiliary EFO valve cartridge, the following mounting torques apply:

Series 14 - Solenoid Coil Retaining Nut	30 in-lbs [15 N-M]
Cartridge to Body	190 in-lbs [22 N-M]
Series 21 - Solenoid Coil Retaining Nut	30 in-lbs [15 N-M]
Cartridge to Body	475 in-lbs [55 N-M]

Hand Pump

In the event power should be lost to the pump/motor, the Barrier(s) can be raised by working a manual hand pump which is mounted adjacent to the pump/motor on the skid base. The hand pump has its' own internal check valve so no fluid is lost through the hand pump back to tank during normal motor driven pump operation. The suction line to the hand pump is located near the reservoir bottom. In use, the hand pump supplies oil to the pressure (P) side of the hydraulic system. The pump can be operated at anytime.

To raise a Barrier with the hand pump when electricity is out:

1) Check sight gage for proper fluid level, add oil as necessary.

2) Make sure accumulator bypass (bleed down) valve is closed.

3) Shift directional valve spool of Barrier from left (Up) side.

4) Start pumping (each stroke should be productive). Pump until Barrier is fully up.

Copyright 2010 Delta Scientific Corporation
All Rights Reserved

5) Continue pumping for 10 to 20 strokes after the Barrier is up. This will add some oil to the accumulator to provide for some internal leakage before the Barrier would start to drift down from low pressure.

System Bleed Down Valve

Prior to performing any work on the hydraulic power unit or Barricades it is necessary to bleed down the pressure stored in the accumulator(s). **Note:** It is especially necessary to bleed the power unit down to zero hydraulic pressure before topping off the reservoir with fresh oil; large oil spillage can occur if the unit is not at zero pressure when the reservoir is topped off! This is accomplished with the accumulator bypass or bleed down needle valve located between the high pressure side of the system and the reservoir tank. (Typically this valve is mounted behind the hand pump in a line tied to the hand pump suction line.)

To bleed down the system:

1) Turn off electrical power to the pump/motor.

2) If system is equipped with the optional auxiliary emergency fast operate system, release the auxiliary EFO valve override pin by twisting and pulling to the out position.

3) Release set screw. Crack open the bypass needle valve slightly until hissing sound is heard. Continue to open slowly until pressure on gage reads zero.

4) For added safety, leave valve open while performing maintenance.

To resume operation, close the bypass valve snugly and lock with the set screw. Turn on system power

Hydraulic Interconnect Lines

Delta Scientific uses one of two systems to connect the hydraulic power unit to the Barrier(s). Applicable to both systems is a need to run the lines in the most direct route as possible, keeping bends to a minimum. Long runs will slow the Barrier rise time and must be compensated by increasing the flow diameter. In general, all runs over 50 feet [15 M] should first be cleared with the factory, especially if minimum emergency fast rise times are critical to the installation.

The hydraulic power unit should be mounted at approximately the same or higher elevation as the Barrier(s). Other wise, the oil in the lines may repeatedly drain back to tank and make the Barrier motion erratic.

Cleanliness is the other important requirement for the hydraulic interconnect lines. Dirt or metal chips will find their way into the tight clearances of the components, scoring shafts and spools and wearing seals. Lack of cleanliness will shorten the service life of the system.

Copyright 2010 Delta Scientific Corporation
All Rights Reserved

Flexible Hydraulic Hose

This system conveys the hydraulic oil from the HPU to the Barrier through flexible hose(s) which in turn are run through a larger conduit, generally a 3 inch [75 mm] PVC tube per hose pair. The PVC conduit should be run to the Barriers in as direct a line as possible, all bends being a radius of at least 6 diameters of the conduit. The burial depth of the conduit should be deeper than the maximum permafrost level in areas subject to freeze. This will prevent excessive pressure drops in the hoses due to high viscosity from the cold. As the hose length changes under pressure, always provide some slack in the hose to allow for shrinkage or expansion.

All joints in the conduit system should be smooth and free from sharp edges and burrs to prevent scoring the hose outer sheathing during pulling and Barrier operation. A hose under pressure is very rigid and tends to bounce when the directional valves are shifted. Sharp edges will quickly cause a hose failure. Where the hose can not be clamped or fixed away from abrasive surfaces, a steel or plastic protective coil or sleeve should be placed over the hose.

Insulate the hose with a heat resistant boot, fire-sleeve or a metal baffle if the hose run passes near an exhaust manifold or other heat source.

Hoses received from the factory have caps on each end and are free from dirt and other contamination. Do not remove caps until hoses are pulled through the conduit and are ready for termination. If caps are not present, reclean the hoses by blowing out with clean compressed air. As an alternate, hose assemblies may be rinsed out with clean mineral spirits, being sure to flow the mineral spirits through from top to bottom without forming any low points which will tend to collect debris.

Before attempting to pull hoses through the conduit first inspect them. Lay the hose out straight and check that the layline of the assembly is not twisted. (Hoses pulled with a twist in them will tend to straighten, causing fitting nuts to loosen.) Check for scoring, cracks, bulging, kinks and dirt in the outer sheath. Check for proper gap between nut and socket or hex and socket; nuts should swivel freely. Be sure hose is capped securely.

If the hose must be stored for a prolonged period prior to installation it should be kept in a dark, dry atmosphere away from electrical equipment. The temperature should not exceed 90ºF [32ºC]. Storage in straight lengths is preferred. While stored, the hose should be wrapped as necessary with burlap or other suitable material to prevent damage. Hoses should be inspected regularly when in operation, especially where the hose exits the conduit at the power unit and the Barrier. Worn or damaged hose assemblies should be replaced immediately.

Note: Hoses supplied by Delta Scientific are generally supplied in lengths of 50 feet [15 M]. This is adequate for the majority of installations, however, there is generally some left over length. Coil the hose neatly in a circle approximately 20 inches [0.5 M] in diameter at the HPU. Secure the coil with loosely fitting cable ties or similar tying system. Do not allow the hose to rest on the ground or across sharp corners of equipment. If the hose is too short, extension pieces of the correct length can be ordered. As an alternate, hoses can be held back from your shipment and made to exact requirements when the length is determined if desired.

Copyright 2010 Delta Scientific Corporation
All Rights Reserved

Special field assembly type fittings may be supplied to allow the factory length hoses to be cut and re-terminated to the exact length in the field without the use of special tools.

Steel Pipe Interconnect System

As an alternate to the flexible hose system, steel pipe may be used for the run from the HPU to the Barrier. The same comments above about short, direct runs to the Barrier(s) apply. Typically the pipe run is made up above grade and dropped into a trench for direct burial (below frost level if applicable). If local conditions dictate, the outer portion of the pipe and fittings can be corrosion protected by coating or tape wrapping if desired. Short lengths of hose, typically 3 feet [1 M] long, can be supplied to attach the HPU and Barrier to the pipe system. Or the piping can be plumbed directly to the fittings on HPU or Barrier (for this a union will be required).

The pipe used should be ASTM A-106B seamless (carbon steel) as a minimum. Care should be taken when selecting wall thickness Vs pipe diameter for the system design pressure (Delta can be consulted for proper line sizing, strength calculations and material selection).

Fittings for the pipe run should be forged steel, ASTM A-105 or equal. Malleable iron is not acceptable. All pipe and fittings are to be furnished black, i.e., no galvanizing is permitted; the galvanize can flake off and block or damage hydraulic components.

If desired, stainless steel pipe and fittings can be used, however, do not mix stainless steel pipe with carbon steel fittings or vis-a-vis severe corrosion of the carbon steel components could result. Copper and copper bearing alloys are generally unsuitable for hydraulic oil systems and should be avoided when possible.

Fittings

A variety of fittings are used on a Delta Barrier system; an understanding of how each style seals is important so that leak free operation can be maintained.

Pipe threads are of American National Taper Pipe Thread pattern. As the name implies they seal when the threads pull the tapers together to form a tight joint. These threaded fittings are the only style used by Delta on which Teflon tape or pipe dope may be used. Great care should be taken that pieces of tape or liquid sealant do not end up in the part being sealed as they will eventually find their way into valve seats or other critical parts. Start wrapping the tape one or two threads back from the front of the male fitting and only one or two times around is sufficient. More than twice around is detrimental to a tight joint. Fittings should be brought up snug but not too tight or the female part can be distorted. If orientation of the part is critical, stop on your mark as the part is getting snug instead of trying to force the fitting another complete turn.

SAE (Society of Automotive Engineers) straight threads are used on several fittings where the connection orientation is critical. The male fitting is oriented and a locking nut with washer and O-ring is tightened against the female part. Again, do not over tighten or distortion can occur.

The remaining fittings are SAE 37 degree flare fittings. These have a male nipple to which a compatible female hose or tube/nut can be attached. Most plumbing on the HPU is done with steel hydraulic tubing held to the SAE 37 degree male flare nipple with a ferrule and nut. The tube is not

Copyright 2010 Delta Scientific Corporation

All Rights Reserved

flared but cut square and deburred. The sealing pressure comes from the nut forcing the ferrule down onto the tube. These fittings can be broken and remade if necessary. Again snug is preferred to overtightened.

Most hoses supplied by Delta are terminated with SAE 37 degree female swivel ends. As the nut swivels on the hose, unions are not necessary. These screw directly onto a companion SAE 37 degree male nipple. To avoid confusion as to a fitting size, use the following table should ordering be necessary:

JIC Size	Hose I.D.	Steel Tube OD	Thread
JIC02	1/8"	1/8"	5/16-24
JIC04	1/4"	1/4"	7/16-20
JIC06	3/8"	3/8"	9/16-18
JIC08	1/2"	1/2"	3/4-16
JIC12	3/4"	3/4"	1-1/16-12
JIC16	1"	1"	1-5/16-12

Note: To repeat, do not use Teflon tape or pipe dope on any straight thread fitting. Only taper pipe threads are to be so sealed.

Cylinders

The Barriers are moved by double acting hydraulic cylinders. These are specified by the bore diameter and length of stroke, such as 2.5" by 8". When the Barrier is commanded to rise, oil is forced into the bottom or 'cap' end of the cylinder, extending the cylinder rod out of the body. The rod end of the cylinder terminates in a clevis and the clevis pin pushes against the Barrier to move it in the up position. When lowering, the cylinder rod retracts into the cylinder body as the oil flows out of the cap end. These heavy Barriers operate single acting. That is, the rod end of the cylinder is allowed to breath air, gravity alone forcing the oil out of the cap end (single acting). The rod end breather plumbed back to a dry location (usually the reservoir tank top) to prevent water from being sucked into the breather fitting.

The cylinders are pre-plumbed to 'headers' at the Delta factory. The headers terminate in the Barrier access area where the customer ties the Barrier to whatever interconnect system is selected. The connection fittings are color coded as noted above in the **Interconnection Convention** paragraph.

Interconnect Convention

So that the Barrier rises when the 'Raise' button is pressed it is necessary to coordinate the interconnect lines with the proper HPU and Barrier connections. The following convention has been established by Delta:

Color Tab	HPU Port	Barrier Cylinder	Function
Red	'B'	Cap (Bottom) End	UP
Yellow	TANK TOP VENT	Rod (Top) End	VENT

Copyright 2010 Delta Scientific Corporation
All Rights Reserved

Hydraulic Oil

The hydraulic oil selected for the Barrier system is one of the most critical decisions to be made on your installation. The properties of the oil will affect the as new performance of the Barriers as will as the performance in years to come. Delta recommends the use of high grade, inhibited petroleum hydraulic oils for use in its' systems. These oils inhibit or prevent rust, oxidation, foaming and wear. They are readily available just about everywhere in the world.

A viscosity compatible to the expected ambient temperature of the job site should be used. A heavy oil used in snow conditions will tend to slow the Barrier response time down, while light grade oils in desert conditions may not provide lubricity necessary to prevent component wear. Most brands of oils are manufactured in different grades for this purpose.

If required, the new fire-resistant or environmentally friendly fluids can be selected, please consult your fluid dealer for correct selection.

Delta does not recommend the general use of automatic transmission fluid in our systems. While compatible with the seal materials used in all the system components, ATF does not have sufficient viscosity at moderate temperatures and it is generally more expensive than the specially formulated general purpose hydraulic oils. **Under no circumstances** should brake fluid be used. It is not compatible with the seals and will swell and degrade them.

Note: The unit as received from the factory has been tested with Shell Oil Company 'Tellus' 46. Although the unit has been drained after test approximately 1 inch [25 mm] of fluid remains in the reservoir bottom. The hydraulic oils in the following tables should be compatible with this fluid.

Biodegradable Oils

Environmentally friendly oils are also acceptable for use in these systems. These fluids are generally based on naturally occurring vegetable oils and are biodegradable by naturally occurring organisms when spilled or leaked in relatively small quantities. Larger spills will still need to handled similarly to currently accepted methods for conventional mineral oil spills.

Contamination of these oils by other fluids may change the biodegradability, toxicity, or other performance characteristics. Systems should be cleaned as thoroughly as possible before introducing a biodegradable fluid.

Delta has reviewed the data on biodegradable oils manufactured by both Mobil and Texaco. These are summarized below. Other manufacturers' products are acceptable if equal to the performance of these oils or the standard mineral oils listed in the following pages. Consult your local fluid dealer for his recommendation.

	Mobil Oil Corporation	Texaco Lubricants Company
Light	EAL 224H	Code 1607 Biostar Hydraulic 32
Medium	EAL 224H	Code 1616 Biostar Hydraulic 46

Copyright 2010 Delta Scientific Corporation
All Rights Reserved

Commercial Hydraulic Oil Interchangeability Chart

*	**AMOCO Oil Co. (Std. Oil Co)**	**AMSOIL**	**Ashland Oil Co. Valvoline Oil Co.**
Light	Rycon Oil #15	AWH ISO 32	AW Oil #15
Medium	Rycon Oil #21	AWI ISO 46	AW Oil #20
Heavy	Rycon Oil #31	AWJ ISO 68	AW Oil #30

*	**Atlantic Richfield (ARCO)**	**Chevron USA Inc.**	**Continental Oil Co**
Light	Duro AW S-150	EP Hyd Oil 32	Super Hyd 15
Medium	Duro AW S-215	EP Hyd Oil 46	Super Hyd 21
Heavy	Duro AW S-315	EP Hyd Oil 68	Super Hyd 31

	Exxon USA Inc.	**Getty Refining**	**Gulf Oil Co.**
Light	Nuto H 32	Veedol Aturbrio AW 150	Harmony 43 AW
Medium	Nuto H 46	Veedol Aturbrio AW 58	Harmony 48 AW
Heavy	Nuto H 68	Veedol Aturbrio AW 61	Harmony 54 AW

	Mobil Oil Corp.	**Phillips Petroleum**	**Pennzoil Co.**
Light	DTE 24	Magnus A 150	Hyd & GP Oil #1
Medium	DTE 25	Magnus A 215	Hyd & GP Oil #2
Heavy	DTE 26	Magnus A 315	Hyd & GP Oil #3

	Shell Oil Company	**Std Oil Co of Ohio**	**Texaco, Inc.**
Light	Tellus 32	Industron 44	Rando Oil HD 32
Medium	Tellus 46	Industron 48	Rando Oil HD 46
Heavy	Tellus 68	Industron 53	Rando Oil HD 68

	Union Carbide Corp
Light	**
Medium	UCON Hyd Fluid WS34
Heavy	**

* Light oils are for cooler climates; medium for temperate zones; heavy for tropical or desert areas.

** No recommendation

Copyright 2010 Delta Scientific Corporation
All Rights Reserved

DELTA

START UP PROCEDURE
VEHICLE ARREST SYSTEM

COPYRIGHT 1991 DELTA SCIENTIFIC CORPORATION

ALL RIGHTS RESERVED

MFG. UNDER U.S. PATENT #4,097,170 4,158,514 4,318,079 4,354,771 4,490,068 4,576,508 4,715,742

U.K. PATENT # GB 2,127,893B 2,138,883B

40355 DELTA LANE • PALMDALE, CALIFORNIA 93551, USA • PHONE (661) 575-1100 • FAX (661) 575-1109

E-MAIL: info@deltascientific.com

START UP INSTRUCTIONS
PHALANX MODEL BARRIERS WITH DELTA PUMPS

Safety Precautions

At all times observe good safety practices when working on either the electrical or mechanical system. Particular attention should be paid to the danger of working on the Barrier when the power is on. Barriers are powerful hydraulic presses that can easily crush anything in their way. Keep hands free of the mechanism when the power is on or the HPU is up to pressure. Turn off the electric power and bleed the hydraulic pressure down to zero before working on any part of the system. Traffic should be controlled around the Barrier during any work so that vehicular accidents do not occur if the Barrier should happen to rise. After work is complete, do not allow traffic over the Barrier until all control and safety functions have been verified to be properly working.

YOUR SPECIAL ATTENTION IS CALLED TO THE FOLLOWING:

Special Safety Considerations

Delta Barrier Systems are designed to deter, and as necessary stop unauthorized vehicle traffic by inserting a nearly immovable obstacle in a roadway. During normal servicing, maintenance and testing work, every effort must be made to protect pedestrian and vehicle traffic from entering traffic lanes where work is underway.

During work on either the Barrier(s), the control circuit, control logic, power unit, power feed or the control panel(s); traffic across or near the Barrier(s) should either be stopped or directed into a safe passage.

Prior to starting, restarting or restoring power to a Barrier system all remote input devices such as radio links, card readers, remote control panels, etc. should be checked to insure that they are properly set or are inactive. This is important to insure that a signal directing the Barrier to change status is not unexpectedly received at the time when the power is restored.

Note that any device (supplied by Delta or others) that produces a contact closure to change the Barrier direction must be checked to verify that stray signals or voltages cannot cause that device to produce a false signal.

When a Barrier is powered up, whether at start-up, following a power outage or following the completion of service or maintenance work, these same precautions should be taken.

Consult the other sections of this manual for additional safety and security instructions and warnings.

Copyright 2004 Delta Scientific Corporation
All Rights Reserved

System Configuration

Depending on the threat analysis and the specific layout of an installation site, Barrier systems can be configured to react differently to a variety of input signals or events. The selection of components and the configuration to meet these requirements are usually incorporated in the system at the time of manufacture. However some changes can be made in the field or by changing the nature of supplied input.

Default Status Quo

In most locations, security considerations are such that a Barrier system can be configured to 'default status quo', that is the Barrier will not change status following a power outage or interruption. If a Barrier system so configured is in the open position when power is applied at initial start-up, following service or in the event of a local power outage, the Barrier will remain in the open position as when the power was removed or interrupted. Or if the Barrier is in the guard position it will return to the guard position upon resumption of power. An exception to this is the special situation as defined below in the 'power off' section.

Default Secure

In certain high security areas Barrier systems may be configured so as to default to the Secure Status when power is applied to a system, whether following the system having been turned off or after unexpected power interruption. Thus a system on stand-by automatically goes to the guard position when the power is applied. That is, should the power be interrupted and then restored, while the Barrier is in the open position, it will return to the guard position.

If a Barrier is in the guard position when the power is interrupted it is normally designed to hold the guard position.

Power Off Operation

A Barrier system with a battery back-up for the control circuit and the power off feature, can be operated a limited number of times during a power off condition. Once the power off reserve is exhausted, the last command the system receives will dictate the Barrier position when power is restored. Hence, if the Barrier is in the open position when the 'power off' reserve is spent, and the system then receives a close signal, the Barrier will remember that last signal and close when power once power is restored.

Additional Precautions

Delta Barrier system controls are configured to meet site specific security conditions and the operating logic is most often defined at the time of procurement.

If the security or safety consideration of the site where the Barrier is installed or to be installed, dictates that the operation be altered from the original specification, contact the Engineering Department of Delta Scientific Corporation for assistance in making the desired revisions.

Copyright 2004 Delta Scientific Corporation
All Rights Reserved

During routine maintenance and service work, or during thunder storms or other weather related disturbances, power interruptions can occur.

For detailed service, maintenance and safety information refer to the specific sections of this manual provided with each system.

Before operating the system for the first time, make sure that all on the interconnections have been made between the Barrier, control panels and the hydraulic power system. After you are sure that everything is in order, make a visual inspection of the site to check that tools and construction debris are removed and clear of the equipment.

Power

The electrical power that drives the system is typically supplied through a circuit breaker disconnect (customer furnished) that must be turned on before the system will operate. When the main power is turned on the pump motor will, in most cases, start and run until the system cut off pressure is reached. It is important on start up to **verify that the pump motor is turning in the proper direction** indicated by an arrow on the motor fan housing. Turning on the power without this check will destroy the pump in short order.

Control Devices and Their Function

Master Remote Control Panel On/Off Switch

The master control panel has a main power indication light to show that the control circuit power is 'on'. Turning the master control panel main power On/Off key switch to the ON position will in turn illuminate the panel 'on' light.

Barrier Up/Down Controls

There are two basic controls for each of the Barriers, one to **CLOSE** (raise) and one to **OPEN** (lower). The Barriers can be commanded to either **OPEN** or **CLOSE** at any time whether they are moving or stationary. The Barriers will instantly reverse direction if so commanded at any point in their operation.

Barrier Position Indication (optional)

The Barriers have position indication lights on the control panel. A green light indicates that the Barriers are **OPEN** (fully down) on the limit switches, any other position results in a red light indication.

Emergency Operate (optional)

This feature allows the Barriers to be raised at the maximum possible speed when the Emergency Operate button is pressed. Once the button is pressed, the panel is locked up so that all lower commands are overridden. Power is continuously applied to the UP solenoid valves as well as the EO valves until the Reset button is pressed, which will restore the system to normal operation.

Copyright 2004 Delta Scientific Corporation
All Rights Reserved

Reset should be pressed within 15 minutes of EO use to prevent possible heat damage to the solenoid valves.

Annunciator (optional)

An annunciator feature is provided to alert the guards that the Barriers have been left in the down position for too long. The master remote control panel has an 'Annunciator Off/On' switch. With the switch in the 'Off' position, no alarm will sound. When placed in the 'On' position, the alarm will sound if the Barriers are left down longer than the preset value of the annunciator timer located in the control circuit. The alarm can be silenced by raising the Barriers or by turning the switch back to the 'Off' position. The timer is customer adjustable by accessing the inside of the master control panel.

Secondary, or Slave Panels (optional)

A secondary or slave panel may be incorporated in the system which allows for full operation of the Barriers from a location remote from the master control panel. The slave control panel is armed from the master control panel location. The slave panel has a main power indication light to show that the panel is armed from the master control panel. Turning the slave control panel main power On/Off key switch to the ON position will in turn illuminate the panel 'on' lights and allow full operation of the Barriers from the slave. The annunciator on/off and EO reset control is absent from the slave control panel although the slave panel does include the annunciator output siren.

Other Control Devices

Other control devices may be provided by Delta or by others. The Barrier can be raised or lowered by any normally opened, momentary closure type button or remote control device, such and radio, key pads, card readers, loops, etc.

Copyright 2004 Delta Scientific Corporation
All Rights Reserved

Start Up Procedure

Safety Precautions

On initial start up, it is important to close off the roadway and clear the Barrier area of nonessential personnel. **Barrier movement may be very erratic at first.** In addition, each time the system is restarted or maintenance is performed the roadway should again be cleared to guard against unexpected Barrier movement.

Start Up Sequence

1. Block all traffic during tests. Stay clear of Barriers.

2. Check that all electrical and hydraulic inter-connections are tight.

3. Fill system with **clean, filtered** oil to within 1" [25 mm] of the top of the sight glass.

4. Confirm that the pressure bleed down valve is turned fully clockwise to close. Do not over tighten.

5. Turn all flow control valves fully clockwise to close, then open each 2 full turns. This will be the starting point for the Barrier up/down speed adjustments.

6. Briefly apply power to the motor to confirm that the motor direction is per the direction arrow on the motor fan housing. Correct if necessary.

7. Apply power to the motor and allow the pump to bring the system up to the shutoff point as shown on the motor starter drawing, 1900 psig [131 bar].

8. Check for any leaking fittings.

9. Operate each Barrier manually by pushing the override pins on the ends of the solenoid valves.

10. Check that when the **left** side solenoid pin is depressed, the Barrier **raises**. When the **right** side pin is depressed the Barrier should **lower**.

11. Cycle the system manually several times to remove air from the system. When the air is removed from the lines (no bleeding should be necessary) the Barrier motion should be smooth.

12. As the Barrier is manually moved, confirm that the pressure switch is turning the pump motor off and on at the correct values as shown on the motor starter drawing; off at 1900 psig [131 bar], on again at 1400 psig [97 bar].

13. Turn power to the pump 'Off'.

Copyright 2004 Delta Scientific Corporation
All Rights Reserved

14. Bleed the system pressure down to zero by opening the bypass valve. This will help prime the hand pump.

15. **With the system at zero pressure**, top off the reservoir oil tank with **clean, filtered** oil to within 1" [25 mm] of the sight glass top.

16. Test hand pump operation by lifting the Barrier. Approximately 65 to 75 strokes will be required for these Phalanx® Barriers.

17. Turn the motor/pump power back to 'On' to bring the system back to full pressure.

18. Apply power to the control circuit and turn the Master control panel key switch to 'ON'.

19. Run the Barrier Open and Closed several times allowing time for the HPU to recover pressure between each cycle. Check function of the indicator lights on the remote control panel.

20. With the Barrier(s) in the down position and after unit has again come to full pressure, depress the Emergency Operate button. Note that Barrier(s) come to the guard position at the maximum speed. Note that the 'EO Active' light is on. Check that the **OPEN** control buttons are inactive. Press reset button to clear EO condition and lower Barriers.

21. Arm the Slave control panel (if present) from the Master control panel and repeat steps 19) and 20).

22. Arm the annunciator siren from the Master control panel and lower one of the Barriers. Check that the siren sounds at the desired time interval. (The time interval may be adjusted by opening the Master control panel and turning the time knob on the timer.)

23. Adjust the Barrier operating speed to the desired value. Delta suggests that both the up and down speeds be approximately 3 to 5 seconds. The type and adjustments of the valves are in the Drawings section of this manual. Normal operating speeds of 2 seconds or less are possible, but the increased wear and tear on the equipment should negate any considerations to so operate the Barriers. Excess noise also accompanies the faster speeds. After final adjustment is made, lock valves in position.

Copyright 2004 Delta Scientific Corporation
All Rights Reserved

OPERATIONAL SUMMARY

BARRIERS OPERATED FROM A NORMALLY UP POSITION

1. Barriers are to stay in the up and locked position and are to be lowered for the passage of one vehicle at a time.

2. During the normal hours of operation, the main power key switches shall be in the 'ON' position. The panels shall be turned 'OFF' and the keys removed when no guards are present at the control stations.

3. The control panel controls Barriers in each appropriate location. **CLOSE** and **OPEN** control is provided for each Barrier. Before operating any Barrier:

   A) Check that vehicles and pedestrians are clear.

   B) Check that the controls for the correct Barrier will be pressed.

   C) Press **OPEN** to lower Barrier to permit access.

   D) After vehicle is clear of Barrier, press **CLOSE**.

4. The **EMERGENCY OPERATE** button is to be used for **emergencies** only.

   A) Pressing the **EO** button will raise **all** Barriers in approximately 1 to 2 seconds.

   B) The controls are locked until the **RESET** button is pressed. A red light indication shows that the system is in the EO Mode.

   C) The controls are locked even if all Barriers are UP when the **EO** button is pressed.

   D) The **RESET** button should be pressed within 15 to 30 minutes of the EO Actuation.

5. **Do Not Place Items On The Control Panel.** The buttons are sensitive and the Barriers may move while not intended.

6. **Use The Barriers To Control Vehicles.** If a forced entry attempt occurs, use the **EMERGENCY OPERATE** button. The Barriers are powerful and can block or lift most all vehicles.

Copyright 2004 Delta Scientific Corporation
All Rights Reserved

DELTA

MECHANICAL TROUBLE SHOOTING
VEHICLE ARREST SYSTEM

COPYRIGHT 1991 DELTA SCIENTIFIC CORPORATION

ALL RIGHTS RESERVED

MFG. UNDER U.S. PATENT #4,097,170 4,158,514 4,318,079 4,354,771 4,490,068 4,576,508 4,715,742

U.K. PATENT # GB 2,127,893B 2,138,883B

40355 DELTA LANE • PALMDALE, CALIFORNIA 93551, USA • PHONE (661) 575-1100 • FAX (661) 575-1109

E-MAIL: info@deltascientific.com

Doc #100-35 P-5

HYDRAULIC TROUBLE SHOOTING
DELTA PHALANX® BARRIER SYSTEMS

Safety Precautions

At all times observe good safety practices when working on either the electrical or mechanical system. Particular attention should be paid to the danger of working on the Barrier when the power is on. Barriers are powerful hydraulic presses that can easily crush anything in their way. Keep hands free of the mechanism when the power is on or the HPU is up to pressure. Turn off the electric power and bleed the hydraulic pressure down to zero before working on any part of the system. Traffic should be controlled around the Barrier during any work so that vehicular accidents do not occur if the Barrier should happen to rise. After work is complete, do not allow traffic over the Barrier until all control and safety functions have been verified to be properly working.

Barrier Does Not Move

Isolate the problem to either hydraulic or electrical:

1) Confirm power to the motor starter and control circuit is on. Are circuit breakers reset?

2) Check motor starter overload trip indication. Reset as necessary.

3) Check oil level in reservoir. The oil low level switch will open the starter circuit if the level is too low.

4) If the pump motor runs and the HPU maintains pressure, try operating the Barrier manually (see instructions in the Start Up section).

5) If the Barrier operates manually, run through the **Electrical Trouble Shooting** section.

Hydraulic Problems - HPU Does Not Maintain Pressure

Low pressure is usually caused by leakage, either internal or external, or low accumulator precharge.

External Leakage

External leaks are generally the result of loose or broken fittings or lines. As the path of leakage is away from the unit, the oil level falls and eventually the reservoir low oil level switch shuts down the pump motor. Look for spilled oil to locate the leak source. Correct as necessary. Bring pressure to zero before attempting repair.

Internal Leakage

Internal leakage is harder to locate than the above. Large internal leakage is generally accompanied by a hissing sound as oil flows over a valve seat or past a seal. An industrial stethoscope or a length of tubing is handy for localizing the source of the noise. Small leaks are

Copyright 2008 Delta Scientific Corporation
All Rights Reserved

harder to find. Internal leakage can cause a component to become warm or hot as energy is dissipated across the leakage point. This temperature rise can also be utilized to locate the leakage source. Working through a list of the probable components may be your only alternative:

1) Bleed down needle valve. Check that valve is tight. Tighten set screw if valve is loosening. If valve will not seal due to a scored seat, replace valve.

2) Relief valve. Check that relief valve is closed at the pressure switch high setting. The valve should start to crack at approximately 2200 psig [152 bar]. Reset should be accomplished before 1900 psig [131 bar] (falling pressure). Adjust as necessary. Tighten lock nut after adjustment. If valve will not reseat, remove and clean or replace as necessary.

   Adjustment of pressure relief valve: Use ½" and 9/16" open end wrenches. Use the 9/16" wrench to slack the lock nut on the valve adjustment spindle while the spindle is being held with the ½" wrench. The pressure relief valves are set at 1000 psig from the factory. Turn the adjustment spindle clockwise to increase pressure to the desired amount (one full turn being approximately 600 psi, or 100 psi for every 1/6th turn). When the desired value is reached, tighten lock nut while holding the spindle from moving.

3) Emergency Fast Operate valve. The EFO valve directly connects the pressure ('P') side of the system to the 'B' (Barrier 'UP') manifold. If the EFO valve opens without the main directional solenoid valve shifting to the 'B' solenoid, oil will short circuit through the 'B' port back to tank. The EFO circuit requires that **both** the EFO and 'B' solenoids (left side) energize at the same time. Verify by energizing the EFO circuit. Place a metallic object (such as a screw driver blade) on the solenoid armatures of both the EFO and main directional solenoids; a slight magnetism should be felt. If not, see **Electrical Trouble Shooting** section to correct. If EFO valve leaks without being energized, disassemble and clean or replace as necessary.

4) Main directional control valve. The main directional control valve is of the spool type. This construction requires extremely close tolerances between the body and the spool of the valve for low internal leakage. However, even a new valve will leak oil from the high pressure side to the tank ports. This is most evident at pump shut off where the pressure gage is seen drifting down 50 or 100 psi [3.5 or 7 bar] or more. Older valves may cause the system to drop down to the point of motor turn on every 5 to 15 minutes (without Barrier being moved). At this point, valve replacement should be considered.

5) Check valve. The check valve (integral with the hydraulic pump, both motor driven and the handpump) keeps the oil in the high pressure side of the system from running back through the pumps to tank when the system is pressurized. Dirt or debris under the seat may allow oil to leak back through these routes. Disassemble and clean as necessary. If debris has scored the seat, seat renewal or replacement of the check valve will be necessary. (The motor driven pump check valve may be detected as being unseated by observing the motor fan slowly turning reverse of it's normal run direction. This is because the high pressure oil is reverse driving the gears of the pump.)

Copyright 2008 Delta Scientific Corporation
All Rights Reserved

6) Hydraulic Pump. The gear pump performance depends upon close tolerances between the gears and the pump housing. Wear from old age or debris from dirty oil will allow oil to bypass around the gears back to the pump suction. Both the displacement and pressure capabilities of the pump will suffer. Eventually the pump will not be able to maintain pressure and will have to be rebuilt or replaced.

7) Hydraulic cylinders. Worn seals or scoring of the hydraulic cylinder walls may allow oil to bypass the cylinder piston. Seal renewal and cylinder honing may be required or the cylinder replaced. The cylinder rod seals are also a potential source of external leakage.

The leakages described above are all generally caused by debris contamination in the oil. Replacement of any of these components is an indication that the oil must be drained and replaced with clean **filtered** oil. A check of the filter and your filter changing procedures is also in order.

Zero or Low Accumulator Precharge

Zero or low accumulator precharge is usually indicated by rapid cycling of the pump motor. This is due to the fact that very little or no oil is available in the accumulator under pressure; the slightest system pressure drop will cause the pressure switch to start the motor. Because very little oil has been displaced, the pressure will then raise very rapidly and cause the switch to stop the motor. This cycle will repeat again and again and will cause rapid deterioration of the hydraulic system.

If this occurs, stop the system and measure the accumulator precharge using the instructions in the **Maintenance** section of this manual. Recharge if necessary to the values indicated in the instructions and/or as written in the pressure log.

Barrier Moves Slowly

Barrier speed is controlled by the flow control valves located between the main directional control valve and the EFO tee connection. Adjust Barrier to the desired speed and tighten the lock nuts. If speed is still undesirably slow:

1) Check temperature. Low temperature raises the viscosity of the hydraulic oil increasing line pressure drop. If temperatures are severely low the power unit should be equipped with a oil reservoir heater. The Barrier's heaters also help (this is **not** their prime function however). Installation of the hydraulic lines in the frost zone will cause Barrier slowing (below the frost line, the ground is a fairly constant 55ºF [13ºC].

   Low temperature hydraulic oils can be selected for use during the cold months. See the selection chart in the **Hydraulic Theory** section of this manual. As an alternative, heaters and line tracing can be done at time of installation.

2) Accumulator pressure. Low accumulator precharge pressure causes less oil to be stored at high pressure. This reduces the maximum Barrier speed to that allowed by the amount of oil that can be displaced by the pump. The precharge pressure is indicated on a tag on the accumulator. Delta P/N 2469-31 Accumulator Charging Kit or similar device can be used to check precharge. **Note:** On units with auxiliary EFO, the auxiliary accumulator

Copyright 2008 Delta Scientific Corporation
All Rights Reserved

EFO valve override must be in the 'out' position to relieve its' pressure before reading precharge.

3) Low system pressure. Low system pressure can be the result of an out of adjustment pressure switch or internal leakage as outlined above. If motor turns off below 1900 psig [131 bar] plus/minus 50 psi [3.5 bar], replace switch. Otherwise, determine cause of internal leakage.

Barrier Does Not Fully Raise or Lower

Failure of the Barrier to obtain full raised or lowered position usually indicates a mechanical difficulty at the Barrier. Check:

1) Debris buildup. Debris or other obstructions inside the Barrier foundation frame or along the rear hinge support may restrict Barrier movement. Remove top plates to inspect. Remove offending material.

2) Low pressure. If the HPU electrical power fails and the pump cannot return the unit to system pressure, the Barrier will slow and eventually stop when pressure is exhausted. Barrier may become stuck between position. Manually shift directional valve and hand pump the Barrier to the desired full up or full down position. Check low oil level is not the cause of pump shut off.

Pump Problems

The heart of the hydraulic power unit is the pump. As it rotates at several thousand RPM, it is subject to more wear and tear than the other components. Pump problems to check are:

Pump Fails to Rotate

1) Check that the switches to the motor are properly set (see **Electrical Trouble Shooting** section). Correct as necessary.

2) Check that the coupling between the motor and the pump rotates. Check condition of the resilient 'spider' between the coupling jaws. Replace coupling key(s), spider or entire coupling if necessary.

3) Check that the pump input shaft rotates by hand. If not, replacement or disassembly of pump will be required.

Pump Delivery Abnormally Low

1) Check that oil level in reservoir adequately covers the suction strainer.

2) Check for clogged suction strainer and suction line air leaks.

3) Check motor is running at rated speed; low voltage or single phasing of three phase motors are probable causes.

Copyright 2008 Delta Scientific Corporation
All Rights Reserved

4) Check that relief valve setting is not too low (leakage through relief valve back to tank).

5) Check that oil temperature is not too high (above 160ºF [71ºC]). This can cause the viscosity to be lower than the recommended range of the pump. Also check that proper oil has been selected.

Excessive Pump Noise

Hammer, gurgle or rattle noises are usually the result of a starved pump suction or air leakage in the suction lines. Causes and corrective action are:

1) Check that oil level in reservoir adequately covers the suction strainer.

2) Check for clogged suction strainer.

3) Check for suction line air leaks.

4) Check that oil temperature is not too high (above 160ºF [71ºC]). This can cause the viscosity to be lower than the recommended range of the pump. Severely excessive oil temperature may cause the pump to cavitate. Also check that proper oil has been selected.

5) Check that the oil temperature is not too low. Excessive viscosity can cause pump suction starvation.

6) Check reservoir filler/breather. A clogged breather can prevent the tank from venting, causing vacuum inside reservoir. This will again starve the suction.

Copyright 2008 Delta Scientific Corporation
All Rights Reserved

DELTA

ELECTRICAL TROUBLE SHOOTING
VEHICLE ARREST SYSTEM

COPYRIGHT 1991 DELTA SCIENTIFIC CORPORATION

ALL RIGHTS RESERVED

MFG. UNDER U.S. PATENT #4,097,170 4,158,514 4,318,079 4,354,771 4,490,068 4,576,508 4,715,742

U.K. PATENT # GB 2,127,893B 2,138,883B

40355 DELTA LANE • PALMDALE, CALIFORNIA 93551, USA • PHONE (661) 575-1100 • FAX (661) 575-1109

E-MAIL: info@deltascientific.com

Doc #100-35 P-6

ELECTRICAL TROUBLE SHOOTING
PHALANX® STYLE BARRIERS OPERATING INDEPENDENTLY - BATTERY BACKUP

Safety Precautions

At all times observe good safety practices when working on either the electrical or mechanical system. Particular attention should be paid to the danger of working on the Barriers when the power is on. The Barriers are powerful hydraulic presses that can crush anything in their way. Keep hands free of the mechanism when the power is on or the HPU is up to pressure. Turn off the electric power and bleed the hydraulic pressure down to zero before working on any part of the system. Traffic should be controlled around the Barriers during any work so that vehicular accidents do not occur if the Barriers should happen to rise. After work is complete, do not allow traffic over the Barriers until all control and safety functions have been verified to be properly working.

Observe *all* safety precautions for the type Phalanx® Barrier being trouble shot *whenever* working under the Barrier. These precautions are found in the Maintenance section of this manual.

If the power unit will not run:

1) Check the main power distribution feed to the power unit and the control circuit. Correct as necessary.

2) Check any disconnect before the hydraulic power unit motor starter. Turn on as necessary.

3) With the disconnect/main switch turned 'on', manually operate the armature of the motor starter. If the motor starts, check the solenoid coil of the starter for continuity. Next check that voltage is being applied to the coil. If no voltage is being applied, check the various switches in the starter circuit by directly applying power to the starter coil (CC2 and coil terminal A1).

   If direct application of power to the coil causes the starter to pull in and the system is not up to pressure, then try the starter circuit switches in this order:

   A) Check hydraulic power unit for leaks or broken lines. Low oil level will cause reservoir level switch to open starter coil. Switch should be closed if oil is visible at least 1" from the bottom of the site gage glass.

   B) Check pressure switch. High and low pressure settings are indicated on the starter circuit drawing. The pressure switch is factory set, if values are plus/minus more than 50 psig from the indicated values, consider replacing the switch.

   C) Check voltage value to the starter. Values 15 percent low will cause the power monitor (if present) to interrupt power to the starter coil.

Copyright 2004 Delta Scientific Corporation
All Rights Reserved

D) Check that the starter overload relay has not tripped. If so, determine the cause, ie, high ambient, pump cavitation, failed pressure switch, etc. Be sure that overload relay is left with the reset in the 'manual' position. The 'automatic' reset feature can lead to failure of other parts in the hydraulic unit.

<u>If power unit runs and is up to pressure but the Barriers can't be opened or closed:</u>

4) Check control circuit voltage at terminals CC1 and CC2. Ordered voltage should be present (120-220/1/50-60). Correct as necessary.

5) The voltage selector switch on the 1PS power supply should be set for the voltage supplied in Step 4).

6) Check fuse 1FU before 1PS power supply for continuity. Replace if necessary.

7) Check fuse 2FU out of the 1PS power supply for continuity. Replace if necessary.

8) Check voltage at terminals CA1 (+) and CA2 (-). This should now be 24 VDC nominal (+2 / -0 volts). Correct if necessary by adjusting the power supply output potentiometer (adjacent incoming power conductors, labeled "V ADJ").

9) Check that the batteries are connected to the circuit and that they are not deep discharged. (**Note:** If power is to be left off the equipment for any length of time, disconnect the batteries or they may be discharged to the point of damage.)

10) With the remote control panel key switch **ON**, check that the panel power indicator light is 'on'. If not, check the voltage across xMA3 and xMA18. It should be equal to the voltage found in step 8). If not, check the interconnect lines to xCA3 and xCA18. If voltage present, check the key switch for continuity. Replace if necessary.

11) Pressing the appropriate **OPEN/CLOSE** command button should cause the control relay in the control circuit to energize and in turn switch on power to the desired control valve solenoid. Voltage to xCA4 allows x1CR to pull in, in turn energizing the Barrier **up** (close) solenoid valve. Voltage to xCA8 allows the down relay x2CR to energize the Barrier **down** (open) solenoid.

A) Determine if command buttons and relays are functioning.

1. Press Barrier **CLOSE** button. x1CR should pull in. The safety loop detector between terminal xCA5 and xCA6, if used, should be closed; jumper these terminals for this test. If x1CR fails to operate, jumper from xCA1 to xCA6. If relay still fails to energize, replace relay or PCB assembly.

2. Repeat for Barrier **OPEN**. x2CR should pull in. If not, jumper xCA1 to xCA8. (The PCB has been factory assembled with a jumper between xCA9 and xCA10). Replace relay or PCB assembly as necessary.

Copyright 2004 Delta Scientific Corporation
All Rights Reserved

B) If the **CLOSE/OPEN** relays (x1CR and x2CR) function and valve still does not shift, check:

1. With appropriate relay energized, check that line voltage is applied between terminal xCB17 and xCB18 ('close' neutral) for 'Up' and xCB19 and xCB20 ('open' neutral) for 'Down' for the appropriate Barrier.

2. If voltage is present, check affected valve coil for continuity by directly applying line voltage (xCA1 and xCA2) to the valve coil. If coil fails this, replace the valve coil or entire valve as appropriate.

Emergency Operate Circuit

12) When the emergency operate (EO) signal is given to the control circuit (by pressing the EO button), 24 VDC is applied to the EO relays x4CR which self hold as the up relays x1CR pull in and energize the directional control valves and the EO valves. The relays and valves remain energized until the reset button is actuated which releases x4CR and restores the system to normal operation. **Note:** Reset should be pressed within 15 minutes of EO actuation to prevent possible heat damage to the solenoid valve coils.

13) If the EO system is not operating, first check that the x4CR's are pulling in. If not, place a jumper across xCA13 and xCA15. If the system now works, check the EO actuate switch (button) which is normally open and the reset button which is normally closed. Correct as necessary. If the relays x4CR pull in when the EO actuate switch (button) is pressed but the valves do not shift, check that the voltage between xCB21(+) and xCB22(-) is at 24 VDC. If voltage is present, check the valve coils for continuity. Replace relay(s) or valve coil(s) as necessary.

Barrier Position Indications

14) The Barriers are equipped with limit switches which pilot relays to provide Barrier position indication. These indications are commonly used to run the Barrier **OPEN/CLOSE** (down/up) lights on the remote control panels and run traffic safety indications such as the stop/go signal lights.

If the indicator lights are not coordinated with the correct Barrier position, check:

A) Limit Switch. The Barrier limit switch is a dry contact switch powered from the control circuit. xCA11 is common; xCA12 is the connection to the limit switch relay and auxiliary relay, x3CR and x3BCR, for the two Barriers. The limit switches should be 'opened' with the Barriers in the up position. The limit switches close when the Barriers are lowered to the full down position. Verify that the contacts behave accordingly, replace if necessary.

B) If the switch is OK, jumper xCA11 to xCA12. Relays x3CR and x3BCR should pull in. Replace relay or entire PCB assembly as necessary.

Copyright 2004 Delta Scientific Corporation
All Rights Reserved

C) If relays appear OK, check bulbs by applying 24VAC xCA1/xCA2 (xMA3/xMA18 or xSA28/xSA18) directly to the suspected bulb.

<u>Delta Model AG812 Stop/Go Signal Gate</u> (optional)

15) The Barrier control circuit provides an independent output from the down limit switch that is used to Vend (raise) a Delta Model AG812 Series Stop/Go Signal Gate when the Barrier is fully lowered. The Signal Gate then simultaneously resets (lowers) as the Barrier is again raised off the down limit switch. Restating the above:

START - Barrier 'UP' -	AG812 Gate Arm 'DOWN'
'Lower' Command	Barrier Starts Down
Barrier Full Down	Arm Starts Up
Barrier Still Down	Arm Full Up
'Raise' Command	Barrier Starts Up/Arm Starts Down
FINISH - Barrier 'UP' -	AG812 Gate Arm 'DOWN'

A) The AG812 Access Gate is installed per the instructions on Document A2021. Wire the 220 VAC power supply to L1 and L2 on the AG812 Terminal Strip.

B) When the Barrier down button is pushed, the Barrier falls making the down limit switch auxiliary relay, 3BCR. The limit switch relay energizes and the Barrier/Signal Gate synchronization contact, 3BCR.1 closes, causing the Signal Gate to raise.

C) Determine if the limit switch and limit switch relays are functioning (paragraph 13). If OK, check:

D) When contact 3BCR.1 closes, Signal Gate should raise. If not, consult Signal Gate instructions, Document A2021 to trouble shoot the Signal Gate.

Copyright 2004 Delta Scientific Corporation
All Rights Reserved

DELTA

MAINTENANCE
VEHICLE ARREST SYSTEM

COPYRIGHT 1991 DELTA SCIENTIFIC CORPORATION

ALL RIGHTS RESERVED

MFG. UNDER U.S. PATENT #4,097,170 4,158,514 4,318,079 4,354,771 4,490,068 4,576,508 4,715,742

U.K. PATENT # GB 2,127,893B 2,138,883B

40355 DELTA LANE • PALMDALE, CALIFORNIA 93551, USA • PHONE (661) 575-1100 • FAX (661) 575-1109

E-MAIL: info@deltascientific.com

Doc #100-35 P-7

MAINTENANCE
DELTA PHALANX® STYLE BARRIER SYSTEMS

Safety Precautions

At all times observe good safety practices when working on either the electrical or mechanical system. Particular attention should be paid to the danger of working on the Barrier when the power is on. Barriers are powerful hydraulic presses that can easily crush anything in their way. Keep hands free of the mechanism when the power is on or the HPU is up to pressure. Turn off the electric power and bleed the hydraulic pressure down to zero before working on any part of the system. Traffic should be controlled around the Barrier during any work so that vehicular accidents do not occur if the Barrier should happen to rise. After work is complete, do not allow traffic over the Barrier until all control and safety functions have been verified to be properly working.

Barrier Disassembly, Service and Assembly

The Barrier assembly is designed to facilitate easy repair and maintenance. Depending on the environmental conditions, we recommend at least a one month interval of inspection to conform that no debris, sand or dirt is accumulated inside the Barrier that would interfere with its operation. This can be easily checked by removing the top plates on the ram and conducting a visual inspection. During the inspection, grease the bearing blocks if equipped with grease fittings. Remove cylinder clevis pins and lubricate. Also examine the hydraulic cylinders to confirm that the seals are tight and are not leaking.

Should disassembly be necessary:

1) Remove Barrier top plates and access box plates.

2) Remove the bearing block bolts at the rear hinge area.

3) Remove hydraulic cylinder clevis pins at the ram attachment point. Using suitable wire, tie the cylinders up so that they do not interfere with the removal of the barrier ram.

4) Using suitable rope, chain or sling through the barrier ram structural tubes, lift ram rearward and then up, being careful not to damage the paint on the ram front surface. A forklift or loader arm can be used for lifting.

5) Place ram on suitable surface.

Full access to the hydraulic lines and the cylinders is now possible. These can be inspected, repaired or replaced as required. Before reassembly, any rust or other corrosion should be removed and the area coated with sealer or rust inhibiting paint. The foundation can be vacuumed of debris and the drain can be cleared as required.

When all is well, replace parts in reverse order. Inspect and lubricate all bronze style bearings and pins. Graphite/fiberglass bearings should be inspected for any damage and replaced as necessary, lubrication of these style bearings is optional. Anti-seize compound has been used on

Copyright 2005 Delta Scientific Corporation
All Rights Reserved

the bearing block bolts at factory assembly, reapply if you remove the bolts. The proper torque value is 45 foot-lbs [60 N-M]. Check for sand and construction debris about the bearings and shafts and clean if necessary.

Hydraulic System Cleanliness

The cleanliness of the hydraulic fluid directly affects the reliability of the hydraulic system and the longevity of the components. When contaminates are present, component wear and fatigue are accelerated, performance is degraded, valves, hydraulic motors and cylinders can malfunction and the hydraulic fluid may break down.

To maintain system efficiency and reliability great care must be taken to prevent any form of dirt, sand or grit from entering the hydraulic system. Only new, clean filtered hydraulic oil should be used for charging the unit. Unless specifically ordered as filtered, new oil should be pumped through a 25 micron filter when charging. See Commercial Hydraulic Oil Interchangeability Chart in the **Mechanical Theory** section of this manual for our recommended oils. The tests conducted at the factory on the system have been done with the HPU charged with Shell 'Tellus' 46. This grade is for moderate temperatures and is available in most of the worlds leading cities. Hydraulic oil is subject to degradation and contamination with age or if subject to high temperatures (above 180ºF [82ºC]. The contamination can be from the following sources:

1) Particulate (dust, dirt, sand, rust, fibers, paint chips, etc.)

2) Wear metals, silicon and excessive oil additives.

3) Water.

4) Sealants (Teflon tape and pastes).

5) Sludge, oxidation and other corrosion products.

6) Acids and other chemicals.

7) Biological and microbes (for high water based fluids or other biodegradable fluids).

The hydraulic fluid should be sampled and tested periodically to ensure contamination and fluid properties are within acceptable levels. We suggest that the first test be done after one year's operation. The frequency of testing will depend upon the results of that test. Most major cities will have hydraulic fluid testing commercially available.

Filters

A filter element is furnished to filter the oil as it is being returned to the oil reservoir. The oil filter housing is only rated at 150 psig [10 bar] or less as the oil in the return line has only to overcome the pressure drop through the filter itself. If the filter should become clogged with particulates from the system, a bypass check valve inside the filter will open and allow the dirty oil to circulate back to the reservoir. For this reason, frequent inspection of the filter is required.

Copyright 2005 Delta Scientific Corporation
All Rights Reserved

A visual determination of the filter's degree of contamination should be made during filter change outs. Adjust the interval between changes if a high degree of particulates are found.

Pump Motor

Electric motors are basically dependable machines and require little maintenance. Too much attention may be worse than none. The following should be helpful in reducing maintenance.

Wherever possible, prevent:

1) Dampness and dripping water.

2) Dirt, especially dust, which may block ventilation.

3) Inaccessible position, in case maintenance is necessary.

4) Excessive heat. Surrounding air (ambient) temperatures must not exceed 104ºF [40ºC). Overloading a motor or operating it in an area where the temperature exceeds 104ºF [40ºC], may cause it to overheat. Frequent or prolonged starting periods or blocked ventilation are other causes of overheating.

The motor has front and rear ball bearings. The bearings have been given initial lubrication at the factory. Motors without regreasing capability are factory lubricated for normal bearing life. Motors having regreasing capability should be relubricated by the procedure noted below if they have been in storage for over one year and at the following service intervals:

1) Every five years based on 5000 hours per year operation.

2) Every two years based on continuous operation.

3) Every six months for continuously high ambient temperature and or dirty or moist locations.

Greasing procedure:

1) Keep grease clean. Lubricate motors at standstill. Do not mix petroleum grease and silicone grease in motor bearings.

2) Use Shell Oil Company "Dolium R", Chevron "SRI No. 2" or Texaco Inc. "Premium RB".

3) Overgreasing bearings can cause premature bearing failure. If motor is equipped with an Alemite type fitting, clean tip of fitting and apply grease gun. Use only one to two full strokes.

Copyright 2005 Delta Scientific Corporation
All Rights Reserved

Pump Replacement

The following recommendations are given should replacement of the pump be required:

1) Damage to this component is generally caused by debris contamination in the oil. Replacement of the pump is an indication that the oil must be drained and replaced with clean **filtered** oil. A check of the filter and your filter changing procedures is also in order.

2) When changing out the pump, avoid contamination. Do not remove the plastic port plugs until just prior to installing the fittings and hoses. The pump mounting flange must make full contact with the pump/motor adapter. Do not use the pump mounting bolts to force the pump pilot into the pilot hole or to align the pump. To avoid damaging the pump seals and bearings, do not hammer on the pump or shaft to install or remove the pump/motor couplings.

System Maintenance

The following maintenance procedures and schedules should be adhered to in order to assure safe, long and trouble free service from your Delta Barrier System:

REMEMBER: SAFETY FIRST !!!

Copyright 2005 Delta Scientific Corporation
All Rights Reserved

SUMMARY OF SAFETY ASPECTS REGARDING MAINTENANCE ON OR ABOUT THE BARRIERS

General

At all times observe good safety practices when working on either the electrical or mechanical system. **Particular attention should be paid to the danger of working on the Barrier when the power is on.** Barriers are powerful hydraulic presses that can easily crush anything in their way. Keep hands free of the mechanism when the power is on or the HPU is up to pressure. Turn off the electric power and bleed the hydraulic pressure down to zero before working on any part of the system. Traffic should be controlled around the Barrier during any work so that vehicular accidents do not occur if the Barrier should happen to rise. After work is complete, do not allow traffic over the Barrier until all control and safety functions have been verified to be properly working.

Maintenance Work In the Area About Barrier

1) Select Barrier UP or DOWN position as desired from the control panel.

2) Turn control panel key switch to OFF position and remove key.

3) Turn system power OFF at the disconnect on the hydraulic power unit (HPU). Padlock the disconnect with your personnel lock.

4) Proceed with maintenance. **DO NOT PERFORM ANY WORK UNDER THE BARRIER OR INSIDE THE BARRIER ACCESS AREAS!** Should work be required under the Barrier or inside the access areas, follow the procedures in the next section.

5) When all work is finished, remove padlock and turn HPU disconnect ON. Return panel key to the control panel.

Maintenance Work Under the Barrier or in the Barrier Access Areas

1) Select Barrier UP or DOWN position as desired from the control panel.

2) Turn control panel key switch to OFF position and remove key.

3) Turn system power OFF at the disconnect on the hydraulic power unit. Padlock the disconnect with your personnel lock.

4) If Barrier is in the UP position, securely block Barrier to prevent falling. Note: Lifting eyes secured in the tapped holes provided in the top plates can be used for chaining the Barrier in the UP position.

5) Bleed down the system:

   A) If system is equipped with the optional auxiliary emergency fast operate system, release the auxiliary EFO valve override pin by twisting and pulling to the out position.

Copyright 2005 Delta Scientific Corporation
All Rights Reserved

B) Release set screw (or lock nut) on the system bleed down valve. Turn (anti-clockwise) the handle on the valve slightly until hissing sound is heard. Continue to open slowly until pressure on gage reads zero.

C) For added safety, leave valve open while performing maintenance.

6) Check that the Barrier is firmly held against movement.

7) Proceed with maintenance. Minimize any exposure to working under the Barrier by using when ever possible tools with handle extensions.

8) When all work is finished, remove padlock and turn HPU disconnect ON. Close any valves opened in the bleed down procedure. Return panel key to the control panel.

Copyright 2005 Delta Scientific Corporation
All Rights Reserved

MAINTENANCE SCHEDULE

FIRST WEEK

Check operation of the Barrier at least once daily. Have the guards or operators report if Barrier fails to operate, or operates with a jerky motion. It is recommended that someone be on call who can explain the operation of the Barrier system to each new guard or operator.

Daily Check

1) Log pressure settings on sheet supplied in this section.

2) Check for leaks around all fittings. Tighten where necessary.

3) Check that hydraulic hoses (if used) are not rubbing on any hard or sharp surfaces. Especially check where hose enters conduit or where it may contact the ground.

4) Check oil level in the site glass after the pump/motor has run to full pressure and shutoff. If level appears to be falling, investigate the HPU and Barrier fittings and the hydraulic lines.

5) See appropriate Trouble Shooting section of the manual if any faults are observed.

6) Check all control functions for complete operation of all features.

7) Replace the oil filter at the end of the first week of operation.

8) At the start and end of the first week's operation, check the tightness of each of the sixteen hardened steel cap screws holding the four bearing blocks. Anti-seize compound has been used on the bolts, reapply if you remove the bolts. The proper torque value is 45 foot-lbs [60 N-M]. Check for sand and debris about the bearings and shafts and clean if necessary. Inspect and lubricate all bronze style bearings and pins. Graphite/fiberglass bearings should be inspected for any damage and replaced as necessary, lubrication of these style bearings is optional.

9) Check all top plate bolts for tightness. Note any tendencies for the top plate bolts to loosen.

Copyright 2005 Delta Scientific Corporation
All Rights Reserved

MAINTENANCE SCHEDULE

MONTHLY

Check and service the following at monthly service intervals:

Note: Block traffic during maintenance to prevent accidents.

1) Shut system off and drop system pressure to zero.

2) Replace the oil filter at first monthly maintenance. For systems that are cycled less than 100 cycles per day, replace every third month there after. If system is cycled above this rate, or the location is in a high dust environment, replace filter monthly.

3) Check the accumulator pressure while the system is at zero pressure using Delta Charging Kit 2469-31 or equal. If tool is not available, observe the value that the pressure gage jumps to when power is again turned on. (See Hydraulic Section for details.) Log value and pressure setting on Log sheet provided.

4) Confirm that the Barrier operates smoothly during the raise and lower cycle. Adjust speeds as desired.

6) Remove Barrier top plates and check for debris build up in the bottom of the foundation frame. Check for indications of oil leaks around the cylinders and Barrier header fittings. Tighten fittings and clean debris as necessary.

5) Check the tightness of each of the sixteen hardened steel cap screws holding the four bearing blocks. Anti-seize compound has been used on the bolts, reapply if you remove the bolts. The proper torque value is 45 foot-lbs [60 N-M]. Check for sand and debris about the bearings and shafts and clean if necessary. Inspect and lubricate all bronze style bearings and pins. Graphite/fiberglass bearings should be inspected for any damage and replaced as necessary, lubrication of these style bearings is optional. Reinstall top plates; check all top plate bolts for tightness. Note any tendencies for the top plate bolts to loosen.

7) Check the operation of the Barrier heaters if so equipped. They should get warm in approximately one minute after energization.

8) Check all control functions for complete operation of all features.

9) Turn off pump/motor power, bleed system pressure to zero and add clean, filtered oil to the top of the site glass.

10) Clean dust and debris from around HPU tank and hydraulic lines. Wipe up any spilled oil.

11) Turn power on and bring system back to operation.

Copyright 2005 Delta Scientific Corporation
All Rights Reserved

MAINTENANCE SCHEDULE

YEARLY

Check and service the following at yearly service intervals in addition to the monthly check:

Note: Block traffic during maintenance to prevent accidents.

1) Drain the oil from the reservoir and flush with mineral spirits or clean oil. After wiping down the tank sides and bottom to assure that no contamination remains, replace with clean filtered oil.

2) Remove Barrier top plates, check that the hydraulic cylinders are not leaking internally (see Hydraulic Trouble Shooting section for details). Replace cylinder seals or cylinder as necessary.

3) Check cylinder clevis pins for wear, replace as necessary.

4) Examine the foundation frame for debris buildup, check drain lines and sump wells for drainage. Clean debris.

5) Tighten or replace any loose top plate bolts. Drill and tap to next size or use inserts if threads are stripped.

6) Check condition of the Barrier paint surface. Prepare, prime and touch up areas where the paint has be chipped or worn away. Apply new reflective tape as necessary.

7) Check hydraulic interconnect lines for kinks, contact wear or bulging. Replace or protect hoses as required.

8) Thoroughly clean the HPU, removing dust and spilled oil. Remove any rust build up on components. Touch up paint where necessary.

9) Check the accumulator pressure while the system is at zero pressure using Delta Charging Kit 2469-31 or equal. If tool is not available, observe the value that the pressure gage jumps to when power is again turned on. (See Hydraulic Section for details.) Log value and pressure setting on Log sheet provided.

10) Test motor starter overloads by pressing the test button. Replace if necessary or press reset. Auto/Manual switch should be in the **Manual** position.

11) Check the pressure relief valve by depressing the starter armature and allowing unit to run to the relief pressure value of 2200 psig [152 bar]. Adjust as necessary.

Copyright 2005 Delta Scientific Corporation
All Rights Reserved

HOW TO ASSEMBLE REUSABLE HOSE FITTINGS

1) Cut the hose squarely with hand-held hose cutter or with a sharp razor knife.

2) Use the table to establish the length of hose that is inserted into the fitting socket:

Hose I.D.	**Insertion Depth**		
	Inch, Fractional	**Inch, Decimal**	**Millimeters**
¼”	7/8”	0.88”	22 mm
3/8”	1-1/4”	1.25”	32 mm
½”	1-1/2”	1.5”	38 mm

3) Use a rule for measurement and mark the hose with a colored pencil or similar.

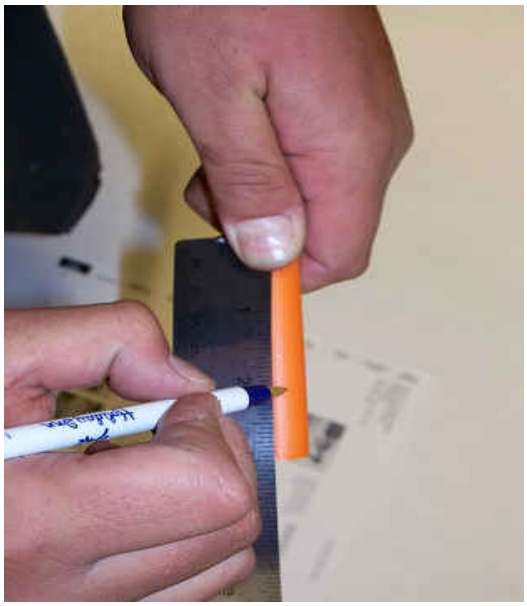

Copyright 2008 Delta Scientific Corporation
All Rights Reserved

4) Lightly lubricate the outer surface of the hose to make it easier to push the fitting over the hose. Use SAE 20 motor oil or the hydraulic oil the system is to be filled with.

5) While tightly holding the hose, push the fitting socket over the lubricated hose and screw the socket on counterclockwise until the socket end is even with the depth mark. The end of the hose should be 0.1 to 0.06 inch [2.3 to 1.6 mm] from the inner shoulder of the fitting socket. It should not be bottomed against the shoulder. Do not over-tighten.

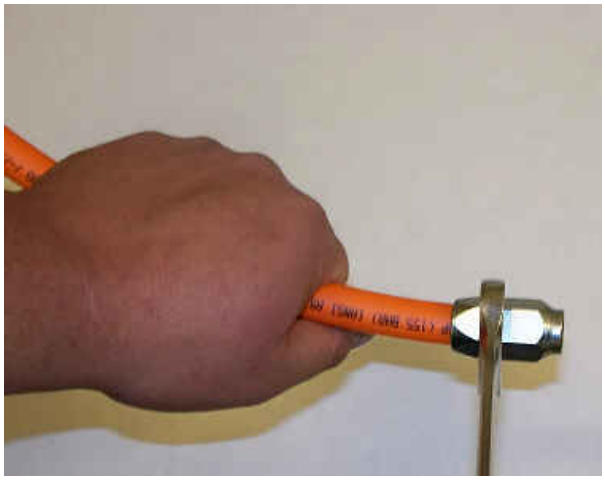

6) Push the fitting insert into the socket. Lubricate the threads on the insert. Holding the socket in a vise or with a box wrench, screw the fitting insert clockwise into the socket with a second wrench until the bottom of the insert hex contacts the socket shoulder. Do not over-tighten.

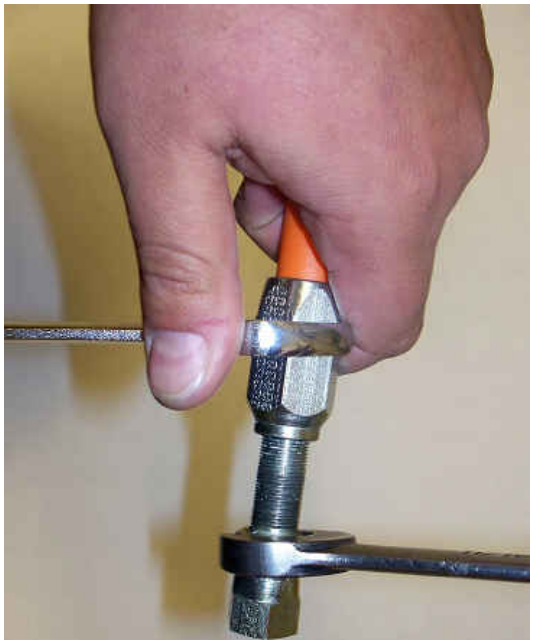

Copyright 2008 Delta Scientific Corporation
All Rights Reserved

20 Series Hose Assembly Instructions

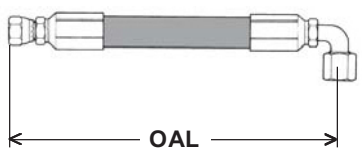

OAL: Straight to Straight
(sealing point to center line of elbow of fitting)

1. Identify over all length (OAL) of hose assembly and the cut off allowance (COA) length of fitting(s) on hose ends by use of the fitting data table. Properly measure, mark and cut hose to desired length using fine tooth hacksaw or a cutoff machine. Care should be taken to ensure a square, clean cut is obtained.

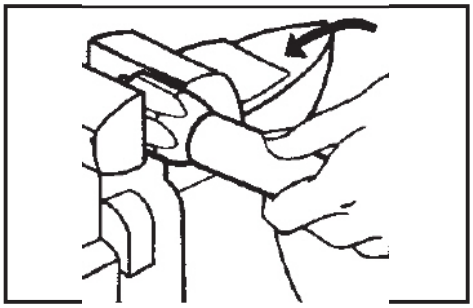

2. Air or solvent flush cut end of hose as necessary to produce a clean hose ID prior to assembly. Place socket in vice and screw in hose counter clockwise until hose bottoms. Back hose out ½ turn.

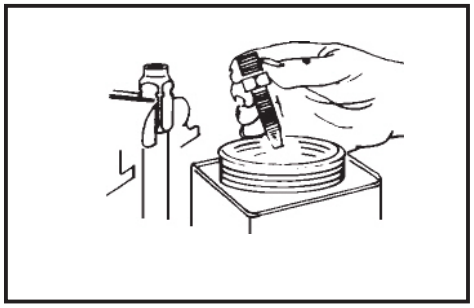

3. Oil inside of hose and nipple threads liberally with Hoze-Oil. Do not oil hose cover.

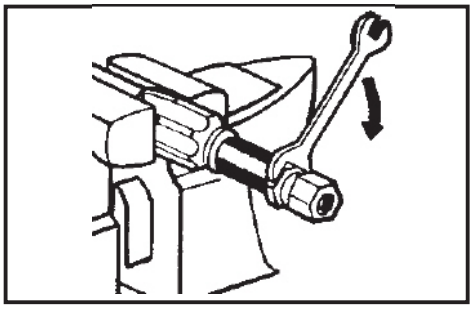

4. Screw nipple assembly into socket using a wrench on the nipple hex until the nipple hex shoulders against the socket. A 1/32" to 1/16" gap between the nipple hex and socket is allowed for displacement angle adjustment when to elbow fittings are used.

Inspection. Examine hose assembly internally for cut or bulged tube, obstructions and cleanliness. Clean ID of hose as necessary. Swivel nuts should turn freely. Check the layline of the hose to be sure the assembly is not twisted. Cap the ends of the assembly to keep clean.

Special instructions for stainless steel fittings. When assembling fittings made with 316 stainless steel, lubricate the threads of both the socket and nipple with Accrolube High Efficiency Lubricant (see page D-8) or equivalent metal assembly lubricant.

Note: DISASSEMBLE IN REVERSE ORDER

IF YOU HAVE QUESTIONS CONCERNING THE PRODUCTS OR APPLICATION OF THE PRODUCTS CONTAINED IN THIS CATALOG, PLEASE CALL:
PARKER HOSE PRODUCTS DIVISION - TECHNICAL SERVICES DEPARTMENT
PHONE: 440 / 943-5700
FAX: 440 / 943-3129
www.parkerhose.com

MODEL 257

3-Phase Monitor

- **Detects phase loss, low voltage, phase reversal**
- **50 Hz, 60 Hz and 400 Hz models**
- **Automatic or manual reset**
- **Five year unconditional warranty**

DESCRIPTION

The **Model 257** continuously monitors 3-phase power lines for abnormal conditions. When properly adjusted, the Model 257 monitor will detect phase loss on a loaded motor even when regenerated voltage is present.

This device consists of a solid-state voltage and phase-angle sensing circuit, driving an electro-mechanical relay. When correct voltage and phase rotation are applied, the internal relay will energize. A fault condition will de-energize the relay. When the fault is corrected, the monitor will automatically reset *(a manual reset version is also available)*.

The Model 257 does not require a neutral connection and can be used with Wye or Delta systems. Voltage ranges are sufficiently wide to allow for proper adjustment to existing conditions. Both "TRIP" and "NORM" condition indicators are provided to aid in adjustment and system trouble-shooting.

TYPICAL APPLICATION

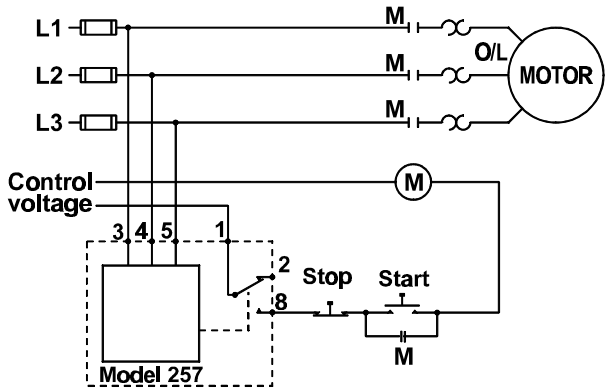

SPECIFICATIONS

AUTO Reset MANUAL Reset	B257B B257BM	257B 257BM	A257B A257BM	EX257B EX257BM	B257B-400 B257BM-400	257B-400 257BM-400
Nominal AC voltage (phase to phase)	120 vac	208/240 vac	480 vac	380 vac	120 vac	208/240 vac
Case Color	Gray	Red	Yellow	Yellow	Gray	Red
Adjustment range	85-120vac	160-240vac	380-480vac	300-400vac	85-120vac	160-240vac
Frequency	60 Hz	60 Hz	60 Hz	50 Hz	400 Hz	400 Hz
Power consumption	0.75W	1.5W	4.5W	3.75W	0.75W	1.5W
Transient protection	2500 VAC for 10msec					
Repeat accuracy	± 0.1% of set point (fixed conditions)					
Response time	50 msec (set or reset)					
Dead band	Approximately 2%					
Output contacts	SPDT 10 amps at 240 VAC resistive					
Expected relay life	Mechanical: 10 million operations Electrical: 100,000 operations at rated load					
Operating temp	-40° to +131° F					
Humidity tolerance	0 - 97% w/o condensation					
Enclosure material	Dust cover: ABS plastic					
Mounting	8-pin socket (**sold separately)					
Weight	5 ounces					
Agency approvals	UL Recognized* and CSA Certified ***condition of acceptability:** the 380V and 480V versions must be used with a UL Recognized 600 VAC socket					

** Order 8-pin socket number **51X120**

DIMENSIONS

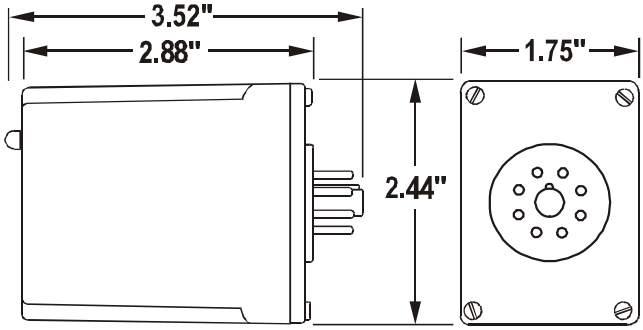

(dimensions have tolerance of ± 0.06)

Telephone: Main - (918) 438-1220
Sales - (800) 862-2875
Fax: (918) 437-7584

E-mail: sales@time-mark.com
Internet: http://www.time-mark.com

TIME MARK CORPORATION

11440 East Pine Street
Tulsa, Oklahoma 74116

Doc No. 87A189 12/00

© 2000 TIME MARK CORPORATION

TIME MARK is a division of AEMT, Inc.

MODEL 257 3-Phase Monitor

READ ALL INSTRUCTIONS BEFORE INSTALLING, OPERATING OR SERVICING THIS DEVICE.
KEEP THIS DATA SHEET FOR FUTURE REFERENCE.

GENERAL SAFETY

POTENTIALLY HAZARDOUS VOLTAGES ARE PRESENT AT THE TERMINALS OF THE MODEL 257.
ALL ELECTRICAL POWER SHOULD BE REMOVED WHEN CONNECTING OR DISCONNECTING WIRING.
THIS DEVICE SHOULD BE INSTALLED AND SERVICED BY QUALIFIED PERSONNEL.

Installation Instructions

WARNING

IN APPLICATIONS WHERE VOLTAGES IN EXCESS OF 300 VAC ARE TO BE MONITORED, BE CERTAIN TO USE THE TIME MARK MODEL 51X120 8-PIN SOCKET, OR AN EQUIVALENT UL APPROVED 600 VAC RATED SOCKET.

INSTALLATION

Mount the 8-pin socket in a suitable enclosure. A NEMA-1 rated enclosure, designed for socket-mounted relays is available from Time Mark Corporation.

Connect 3-phase power to terminals 3, 4, and 5 on the socket. Phase rotation should be verified using a Time Mark Model 108A or 108B Phase Sequence Detector.

Connect the load control wiring to the appropriate terminals on the socket:

For motor control applications; use terminals 1 and 8.
For phase loss alarm applications; use terminals 1 and 2.

Insert the Model 257 into the socket and apply power. If the contact does not transfer (green light ON), check that all phases are present, and of the correct voltage. If power is correct, rotate the level adjustment counter-clockwise.

If the contact still does not transfer, remove power and reverse two of the three phase wires at the socket *(phase rotation is reversed)*. Re-apply power. The contact should transfer to provide a signal path between pins 1 and 8.

NOTE: *When installing the Model 257 monitor in areas of high humidity or contamination, it is recommended that the base area and all exposed metal parts of the socket be coated liberally with a good quality silicon grease, such as Dow Corning DC-4 or DC-4X. Insert the unit into the socket and wipe off excess grease around the base. This will prevent the entrance of moisture and other contaminates into the base and socket areas.*

ADJUSTMENT SETTINGS

The following procedure will allow the Model 257 to be adjusted to achieve a trip point just below the nominal phase-to-phase voltage, where the unit is applied.

Rotate the adjustment control fully clockwise, or until the red (TRIP) indicator illuminates.

Slowly rotate the adjustment control in a counter-clockwise direction, just until the green (NORM) indicator illuminates.

At this point, the Model 257 is the most sensitive to irregular power line conditions. If nuisance tripping occurs, turn the control slightly farther counter-clockwise.

A more accurate setting will require the use of a 3-phase variac to lower the voltage to an exact measurable setting. Time Mark also offers a factory set version of all models and voltage ranges, for only a small additional charge.

TROUBLESHOOTING

Should the Model 257 Monitor fail to operate properly, check that all three voltages are present, and are of the correct voltage level and phase rotation (a Model 108A or 108B Phase Sequence Detector should be used to verify phase rotation). Check all fuses and verify that all wiring connections are correct. If problems persist, contact your local Time Mark Distribuor, or the factory for assistance *(Monday-Friday, 8 a. m. to 5 p.m. CST)*.

MANUAL RESET VERSIONS

IF YOU DO NOT WISH TO USE THE EXTERNAL RESET SWITCH ON THE MANUAL RESET VERSION, YOU MUST JUMPER PINS 6 AND 7. Refer to the Manual Reset 8-pin diagram.

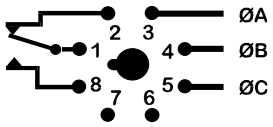

Automatic Reset

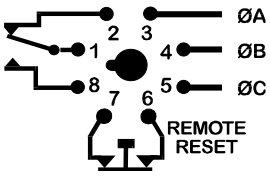

Manual Reset

WARRANTY

The **Model 257 3-Phase Monitor** is warranted to be free from defects in materials and workmanship, and is covered by our exclusive **5-year Unconditional Warranty**. If this device fails to operate, for any reason, we will repair or replace it free, for five years from the date of purchase. Contact the Time Mark Sales department, Monday through Friday; 8 a.m. to 5 p.m., CST, for further details.

Telephone: Main - (918) 438-1220
Sales - (800) 862-2875
Fax: (918) 437-7584

E-mail: sales@time-mark.com
Internet: http://www.time-mark.com

TIME MARK CORPORATION

11440 East Pine Street
Tulsa, Oklahoma 74116

Doc No. 87A189 12/00

© 2000 TIME MARK CORPORATION

TIME MARK is a division of AEMT, Inc.

ACCUMULATOR PRECHARGE PROCEDURE

Use an inert gas such as Nitrogen for precharging accumulators. If oil pumped is not available, dry water pumped Nitrogen gas may be used. **Note: Do Not Use Air or Oxygen, the Accumulator Could Explode!**

Before precharging, make certain that the accumulator gas valve is screwed in tight. Check that the hydraulic pressure is a zero on the oil pressure gage. Precharging the accumulator while under pressure will result in an incorrect precharge pressure.

Check the pre-charge value on the accumulator's label or on the HPU's Flysheet. The following values are a guide only and may be modified in some instances to provide certain barrier performance. (See HPU Drawing or Drawing Fly Sheet for specific project precharge values.)

DSC800, TT203 & TT210 Bollards	500 PSIG
DSC701 & DSC720 Bollards	700 PSIG
TT205 & TT207 Phalanx	700 PSIG
DSC501, TT207S & TT207S/FM Phalanx	850 to 1100 PSIG
DSC1100	700 to 1000 PSIG
DSC1200	900 to 1000 PSIG
DSC1400	1000 PSIG
DSC2000	700 PSIG
DSC7000(H) & DSC7500(H)	900 PSIG
TT224, TW107, TW108, TW2015 and TW4030 Phalanx	700 PSIG
TT270 Hydraulic Gate Operator	800 PSIG
TT212H, TT212E(H) & BB10M Beam Barriers	600 to 700 PSIG
TT212EC(H) & (M), IP500(H) & (M)	600 to 1300 PSIG

CAUTIONS:

1. Do not loop or twist the hose, as it will stiffen when gas pressure is released from the nitrogen gas bottle.

2. Never loosen swivel nut attached to the accumulator gas valve without first backing the Gas Chuck stem out all the way.

3. Do not reduce accumulator pre-charge pressure by depressing accumulator gas valve core (the high-pressure gas may rupture the rubber valve seat). Instead, slowly turn gas valve out until gas begins to escape through the bleed hole drilled through the threads of the valve. This hole is a safety feature, warning of stored pressure whenever the gas valve is being removed. Install a new gas valve 'o'-ring each time the gas valve is removed.

Copyright 2011 Delta Scientific Corporation
All Rights Reserved

Determining the Current Pressure in the Accumulator (During this procedure, refer to the diagrams on page 4.)

1. Remove the gas valve guard. Ensure that the valves are closed on the Nitrogen gas bottle and charge kit. Attach the accumulator charge kit's hose to the nitrogen bottle.

2. Attach the gauge assembly to the hose. Back out the Gas Chuck stem all the way by turning the T-handle (counter-clockwise) before attaching to accumulator.

3. Using a 3/4-inch wrench, hold the top hex on the accumulator's gas valve, and remove the yellow cap with 3/8-inch wrench.

4. Holding top hex on the accumulator's gas valve with a 3/4-inch wrench, attach the gas chuck on the gauge assembly to the gas valve on the accumulator. Secure the gauge assembly gas chuck to the accumulator gas valve with an 11/16-inch wrench. (Position of the tee handle on gas chuck should be fully turned counter-clockwise.)

5. Turn the T-handle on the gas chuck until the stem is all the way up (counter-clockwise).

6. Ensure that the bleeder valve on the gauge assembly is closed.

7. Turn the T-handle on the gas chuck until the stem is all the way down (clockwise) which will depress the accumulator gas valve core.

8. Be certain that the bleeder valve is closed.

9. Using a 3/4 inch wrench, hold bottom hex on accumulator gas valve, and **slowly** turn top hex on the gas valve counter-clockwise with second 3/4 inch wrench until the valve is open. The gauge will show pre-charge pressure.

10. Check the pressure on the gauge. If the gauge pressure matches the recommended pre-charge pressure for your barrier proceed to step 13.

Adjusting the Pre-charge Pressure in the Accumulator:

11. If the pre-charge pressure needs to be-increased, slightly crack open the valve on the Nitrogen gas bottle then the charge kit shutoff valve to slowly fill the accumulator. Close the shutoff valve when the gage indicates the desired precharge pressure.

DANGER! NEVER EXCEED THE **MAXIMUM** ALLOWABLE WORKING PRESSURE OF THE PRESSURE VESSEL.

12. If the gauge pressure exceeds the desired pre-charge pressure is exceeded, ensure that the shutoff valve is closed and then open bleeder valve slightly to reduce pressure.

Note: Allow accumulator to rest 10-15 minutes after gas pre-charging. This will allow the gas temperature to adjust and equalize. Recheck gas pressure and adjust as necessary.

Copyright 2011 Delta Scientific Corporation
All Rights Reserved

Removing the Pre-charge Kit:

13. Using a 3/4 inch wrench, hold bottom hex on accumulator gas valve, and **slowly** turn top hex on the gas valve clockwise with second 3/4 inch wrench until the valve is closed.

14. Before loosening the gas valve swivel nut, turn the T-handle on the gas chuck until the stem out all the way (counter-clockwise)

15. Ensure that the valve on the Nitrogen bottle is closed and open the charge kit shutoff valve. **Slowly** open bleed valve on gauge assembly. Relieve pressure in the hose assembly until gauge reads zero.

16. Holding top hex on the accumulator's gas valve with a 3/4-inch wrench, remove the gas chuck on the gauge assembly to the gas valve on the accumulator with an 11/16-inch wrench.

17. Install yellow gas valve cap on accumulator.

18. Install spacer (optional) and the gas valve guard on accumulator with the supplied 3/8-inch hex bolts.

DANGER! NEVER OPERATE ACCUMULATOR WITHOUT GAS VALVE GUARD INSTALLED.

Copyright 2011 Delta Scientific Corporation
All Rights Reserved

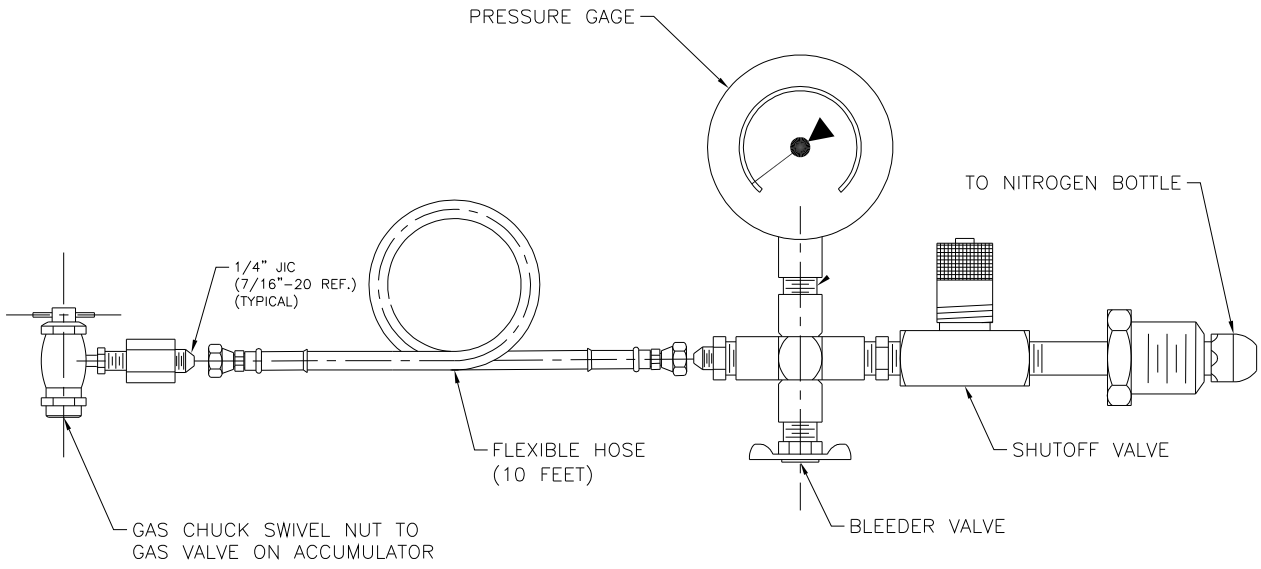

Delta Stock Number 2469-31 Accumulator Charge Kit

Figure 1

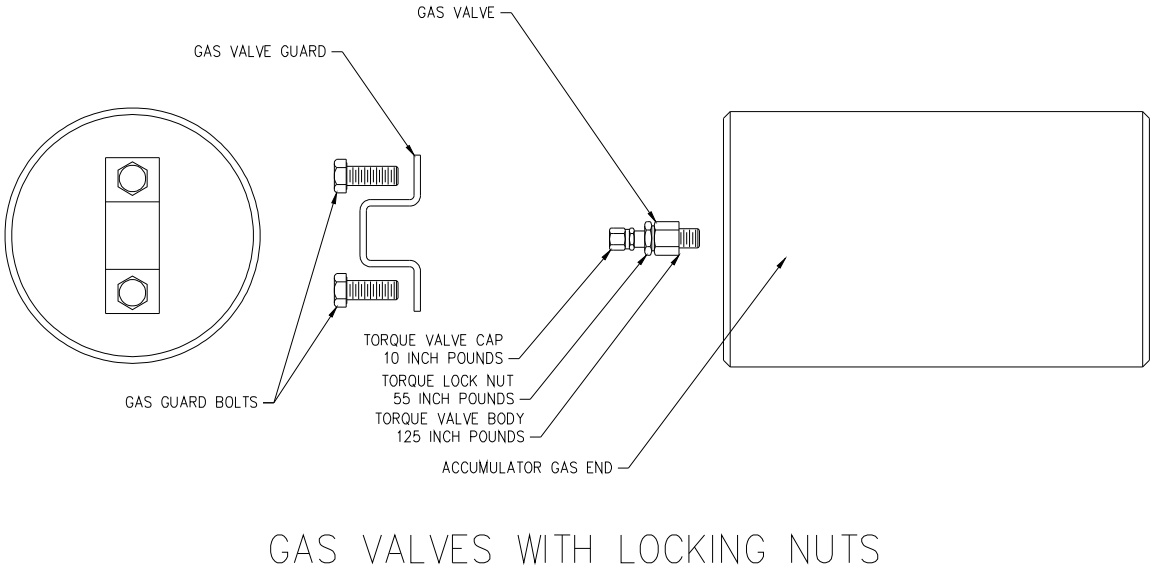

Figure 2

Copyright 2011 Delta Scientific Corporation
All Rights Reserved

HYDRAULIC POWER UNIT PRESSURE LOG

Pump Serial Number: _____

Use this log to provide a record of the key pressure values on the hydraulic system to facilitate trouble shooting and preventive maintenance:

As Shipped:_____-_____-

Reading Date	Low Pressure Reset	High Pressure Shutoff	Accumulator Precharge

Definitions:

High Pressure Shutoff - The gage reading where the pressure switch shuts the pump motor off. Compare against the as shipped value. Values +/- 50 psig are generally OK.

Low Pressure Reset - The gage reading where the pressure switch turns the pump motor back on after pressure drops from being at the higher value. Compare against the as shipped value. Values +/- 50 psig are generally OK.

Accumulator Precharge - The nitrogen precharge pressure in the accumulator. Compare against the as shipped value. Values +/- 100 psig are generally OK. See the **Mechanical Theory** Section of this manual for a discussion of the accumulator. Can be directly checked at zero hydraulic system pressure with Delta Tool, Stock Number 2469-31 "Accumulator Charge Kit". See Document A2025 for the complete instructions of using this tool.

Copyright 2005 Delta Scientific Corporation
All Rights Reserved

SPARE PARTS ORDERING INFORMATION

Insurance or breakdown spares can be obtained locally or from Delta Scientific Corporation as desired. If parts are found locally, they should be of the same manufacture and pattern as the original part. On hydraulic systems, we do not recommend the replacement of the main directional valve by any other manufacturer than Vickers/Double A or Rexroth.

When ordering parts from the factory, please specify the Model of the Barriers and the serial number. If these are not known, the original order number and date of purchase of the system should be given.

(Serial numbers are located on the equipment nameplates on the HPU and in the Barrier access area. The Model number of the system is also shown on the nameplate. Electrical control panels and circuits reference the appropriate drawing number; please provide this number when ordering control components.)

Use the numbers on the attached spare parts list as well as the actual component's manufacturers' number. Give as complete a description of the part and its function as possible. If uncertain as to the parts name or function, a sketch should be mailed or FAXED with the order.

Most parts are maintained in stock and can be processed for shipment within one week of order.
If parts are for breakdown replacement, please note on order so that we may expedite shipment.
If parts are not in stock, we will confirm your order with an expected delivery date.

Prices shown are net each, FOB Palmdale, California. Prices are subject to change without notice.

Contact:

Delta Scientific Corporation
40355 Delta Lane
Palmdale, California 93551
Phone (661)575-1100
Fax (661)575-1109
E-MAIL info@deltascientific.com

Copyright 2007 Delta Scientific Corporation
All Rights Reserved

DELTA SCIENTIFIC CORPORATION
40355 DELTA LANE
PALMDALE, CALIFORNIA, 93551, USA

PHONE 661-575-1100
FAX 661-575-1109
EMAIL info@deltascientific.com

SPARE PARTS LIST - JOBS 7976A AND 7976B
DELTA MODEL DSC207S PHALANX BARRIERS

ELECTRICAL PARTS

EFFECTIVE: January 27, 2012

STK NO.	DESCRIPTION	UNIT COST
2459-10	FUSE, 250 V, 2.5 AMP, 5/PKG,	8.87
2459-12	FUSE, 250 V, 7.5 AMP, 5/PKG,	8.87
2459-15	FUSE, 250 V, 1.5 AMP, 5/PKG,	8.87
2461-25	POWER SUPPLY, 150 WATTS,	334.05
2461-40	BATTERY, 12 VOLT, 7 A-H,	57.20
2463-01	KEY SWITCH,	63.61
2463-01K	KEY, KEY SWITCH,	6.86
2463-02A	SELECTOR SWITCH,	7.05
2463-03A	EFO, HOODED TOGGLE TYPE,	46.03
2463-06	PUSHBUTTON, N.O. BLACK,	14.41
2463-07	PUSHBUTTON, N.C. RED,	16.02
2463-16	PILOT LIGHT, LED, RED,	17.89
2463-17	PILOT LIGHT, LED, GREEN,	17.89
2463-63	ANNUNCIATOR SIREN,	46.32
2464-185	MOTOR, 5 HP @ 415/3/50,	867.91
2465-08	PRESSURE SWITCH, 1550/1900	239.28
2465-11	LEVEL SWITCH,	163.36
2465-27	LIMIT SWITCH ASSY, MAGNETIC,	45.48
2465-74	POWER MONITOR, 415/3/50,	224.22
2465-107	DIN HARNESS - BRN/BLU/GRN	38.50
2467-01	DIRECT. VALVE, DO3, 24 VDC,	416.71
2467-31	EFO VALVE, 24 VDC,	174.76
2467-100	DIN HARNESS, BLK, WHT, GRN,	16.59
2467-101	DIN HARNESS, RED, WHT, GRN,	16.59

PRICES SUBJECT TO CHANGE WITHOUT NOTICE.
PRICES ARE NET 30 DAYS TO APPROVED ACCOUNTS, FOB PALMDALE, CALIFORNIA.
SEE ORDERING INSTRUCTIONS TO ASSURE THAT PROPER PARTS ARE ORDERED.

Copyright 2012 Delta Scientific Corporation
All Rights Reserved

DELTA SCIENTIFIC CORPORATION
40355 DELTA LANE
PALMDALE, CALIFORNIA, 93551, USA

PHONE 661-575-1100
FAX 661-575-1109
EMAIL info@deltascientific.com

SPARE PARTS LIST - JOBS 7976A AND 7976B
DELTA MODEL DSC207S PHALANX BARRIERS

ELECTRICAL PARTS EFFECTIVE: January 27, 2012

STK NO.	DESCRIPTION		UNIT COST
2531-67	STARTER OVERLOAD, 5.4-27 A,		128.13
2531-108	MOTOR STARTER, 240 V COIL,		159.65
2531-113	DISCONNECT SWITCH, 30 AMP,		219.65
2534-68	TIMER RELAY TRIM POT,		2.29
2534-69	TIMER RELAY, 24 VDC,		87.44
7195-FU1	FUSE, 2 AMPS, FAST ACTING		1.04
7195-V1	VOLTAGE REGULATOR, 12 V,		0.92
90605-00	BARRIER CONTROL CARD,		606.32
1N5404	DIODE,		2.29
1/4W1.2K	RESISTOR		2.29
3546-DCNP	VEHICLE LOOP DETECTOR,		240.20
D-168	I-R SENSOR,		442.61
MANUAL	OWNERS MANUAL	SERIAL NUMBER 7976A-B	70.00

PRICES SUBJECT TO CHANGE WITHOUT NOTICE.
PRICES ARE NET 30 DAYS TO APPROVED ACCOUNTS, FOB PALMDALE, CALIFORNIA.
SEE ORDERING INSTRUCTIONS TO ASSURE THAT PROPER PARTS ARE ORDERED.

Copyright 2012 Delta Scientific Corporation
All Rights Reserved

DELTA SCIENTIFIC CORPORATION
40355 DELTA LANE
PALMDALE, CALIFORNIA, 93551, USA

PHONE 661-575-1100
FAX 661-575-1109
EMAIL info@deltascientific.com

SPARE PARTS LIST - JOBS 7976A AND 7976B
DELTA MODEL DSC207S PHALANX BARRIERS

MECHANICAL PARTS EFFECTIVE: January 27, 2012

STK NO.	DESCRIPTION	UNIT COST
2464-32	MOTOR/PUMP ADAPTER,	173.89
2464-52	MOTOR HALF COUPLING,	30.93
2464-53	PUMP HALF COUPLING,	30.93
2464-61	COUPLING SPIDER,	14.91
2465-05	PRESSURE RELIEF VALVE,	107.12
2465-21	PRESSURE GAGE, 0-3000 PSIG,	63.24
2465-22	LEVEL GAGE, 10",	71.52
2465-23	GAGE SNUBBER,	32.76
2465-91	TOOL KIT IN TOOL BOX,	280.43
2466-03B	1/2" FLOW CONTROL VALVE,	105.02
2466-11B	1/4" NEEDLE VALVE,	68.09
2466-33B	1/2" BALL VALVE, BRONZE,	36.42
2467-71	MANIFOLD, DO3-1 STATION	257.40
2468-10	HYD CYLINDER, 3" X 10",	375.65
2468-14	HYD CYLINDER SEAL KIT, 3",	51.75
2468-21	CYLINDER PIN, 1” DIA, TIE ROD,	7.28
2469-31	ACCUM CHARGE MANIFOLD,	248.59
2469-51	ACCUM CHARGE BOTTLE,	268.84
2469-94	ACCUMULATOR, 5.0 GALLON,	1,475.76
2469-96	ACCUMULATOR REBUILD KIT, 6",	469.04
2470-02	FILTER HOUSING & ELEMENT,	246.23
2470-12	FILTER ELEMENT, TANK TOP,	100.49
2470-41	SUCTION STRAINER,	33.28
2470-43	FILLER BREATHER,	51.51
2471-21	HANDPUMP,	434.65
2471-27	PUMP, 0.258 CU IN/REV,	392.66
2471-27S	PUMP SEAL KIT, SHAFT & CRES.	42.83
2471-31	HANDPUMP SEAL KIT,	61.78

PRICES SUBJECT TO CHANGE WITHOUT NOTICE.
PRICES ARE NET 30 DAYS TO APPROVED ACCOUNTS, FOB PALMDALE, CALIFORNIA.
SEE ORDERING INSTRUCTIONS TO ASSURE THAT PROPER PARTS ARE ORDERED.

Copyright 2012 Delta Scientific Corporation
All Rights Reserved

DELTA SCIENTIFIC CORPORATION
40355 DELTA LANE
PALMDALE, CALIFORNIA, 93551, USA

PHONE 661-575-1100
FAX 661-575-1109
EMAIL info@deltascientific.com

SPARE PARTS LIST - JOBS 7976A AND 7976B
DELTA MODEL DSC207S PHALANX BARRIERS

MECHANICAL PARTS EFFECTIVE: January 27, 2012

STK NO.	DESCRIPTION	UNIT COST
2512-4-FT	HOSE ASSY, 1/4" X xx FT LG,	$ 5.63/FT + 21.05
2512-6-FT	HOSE ASSY, 3/8" X xx FT LG,	$ 5.90/FT + 26.08
2512-8-FT	HOSE ASSY, 1/2" X xx FT LG,	$ 6.36/FT + 28.28
2512-12-FT	HOSE ASSY, 3/4" X xx FT LG,	$ 10.19/FT + 44.48
2512-45T	HOSE FIELD FITTING, JIC 04	57.82
2512-46T	HOSE FIELD FITTING, JIC 06	63.81
2512-47T	HOSE FIELD FITTING, JIC 08	84.41
2512-48	HOSE FIELD FITTING, JIC 12	59.35
7002-1	GASKET, OIL TANK COVER,	8.49

DSC207S PARTS

STK NO.	DESCRIPTION	UNIT COST
1501-04	CAP SCREW, 1/2"-20 X 2"LG,	3.43
1502-00	BEARING BLOCK SCAB PLATE,	29.10
2739-010	BEARING BLOCK, 4 BOLT,	72.16
2739-02G	BEARING BLOCK BUSHING, GARMAX GM2428-32	25.40
2739-05G	CYLINDER HANGER BUSHING, GARMAX GM1620-16	14.46
2739-070	CYLINDER CLEVIS ATTACHMENT TANG W/BUSHING	53.77
2739-75	SHAFTING (AXLE/HINGE STOCK), 1.5 INCH NOMINAL OD	5.44/INCH

PRICES SUBJECT TO CHANGE WITHOUT NOTICE.
PRICES ARE NET 30 DAYS TO APPROVED ACCOUNTS, FOB PALMDALE, CALIFORNIA.
SEE ORDERING INSTRUCTIONS TO ASSURE THAT PROPER PARTS ARE ORDERED.

Copyright 2012 Delta Scientific Corporation
All Rights Reserved

DELTA

DRAWINGS
VEHICLE ARREST SYSTEM

COPYRIGHT 1991 DELTA SCIENTIFIC CORPORATION

ALL RIGHTS RESERVED

MFG. UNDER U.S. PATENT #4,097,170 4,158,514 4,318,079 4,354,771 4,490,068 4,576,508 4,715,742

U.K. PATENT # GB 2,127,893B 2,138,883B

40355 DELTA LANE • PALMDALE, CALIFORNIA 93551, USA • PHONE (661) 575-1100 • FAX (661) 575-1109

E-MAIL: info@deltascientific.com

Doc #100-35 P-8

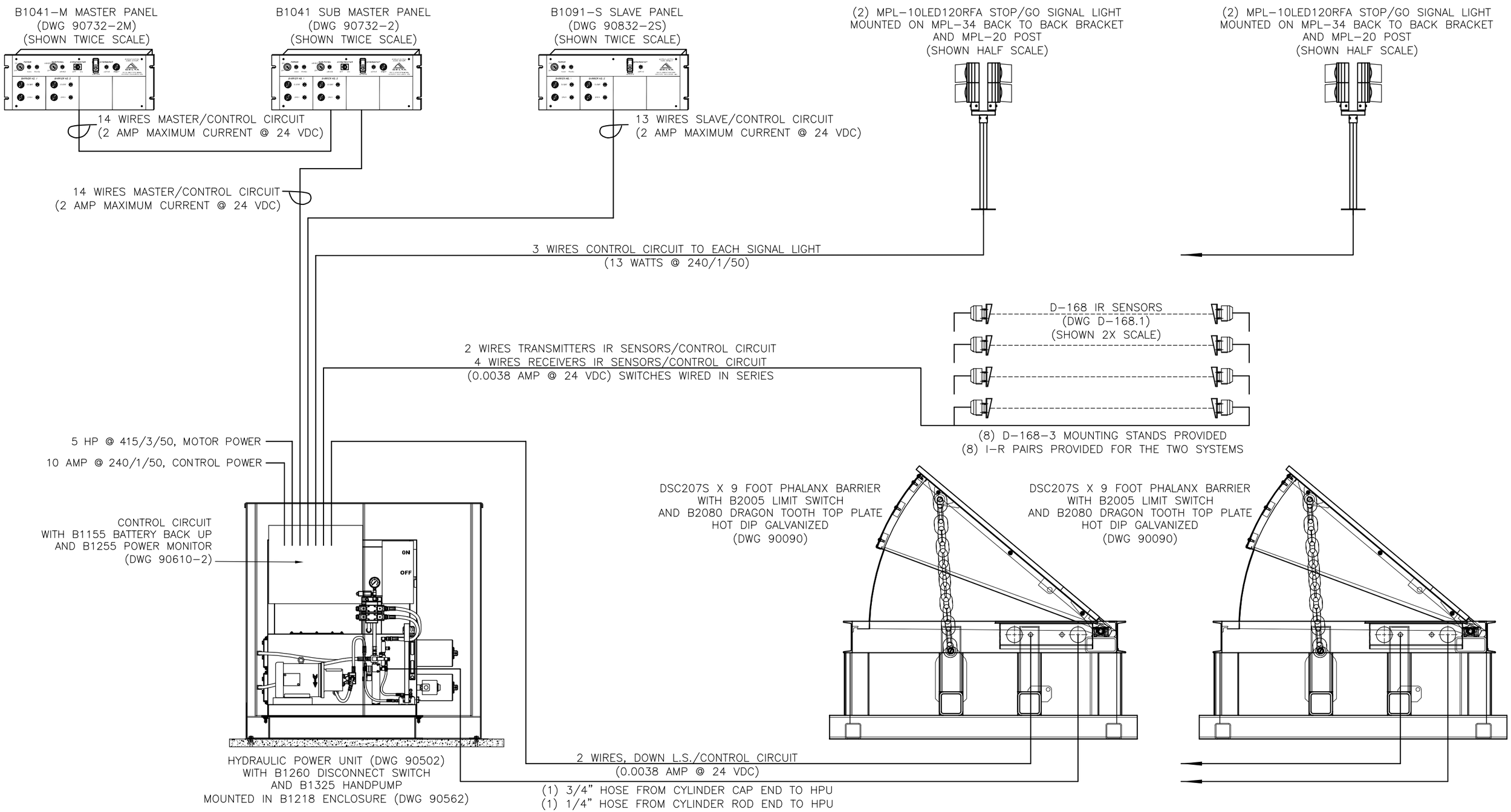

ITEMS ARE SHOWN TO SCALE OR AS NOTED.

PHALANX ™

THIS DRAWING UNLESS OTHERWISE NOTED, REMAINS THE CONFIDENTIAL PROPERTY AND TRADE SECRET OF DELTA SCIENTIFIC CORPORATION. IT SHALL NOT BE DISCLOSED, REPRODUCED OR USED FOR MANUFACTURE, DESIGN OR CONSTRUCTION WITHOUT THE EXPRESS AUTHORIZATION OF DELTA SCIENTIFIC CORPORATION. THE RECIPIENT BY ACCEPTING THIS DRAWING, ASSUMES CUSTODY THEREOF AND UNDER THE ABOVE TERMS AGREES NOT TO ALLOW USE OF BY UNAUTHORIZED PERSONS.

© 2012
ALL RIGHTS RESERVED

UNLESS OTHERWISE NOTED DIMENSIONS ARE IN INCHES

TOLERANCES
.X = ±.060/FT
.XX = ±.030/FT
.XXX = ±.010/FT
ANGLES = ±.5°

SURFACE FINISH
125

REMOVE ALL BURRS & BREAK SHARP EDGES .02 MAX

DELTA SCIENTIFIC CORPORATION
40355 DELTA LANE
PALMDALE, CA 93551 U.S.A.
(661) 575–1100 FAX (661) 575–1109

MODEL DSC207S PHALANX
DUAL SYSTEM INTERCONNECT DIAGRAM

DRWN BY	DATE	DRAWING NO.	REV.
J.FRIEND	01/27/12	J7984–1	–
CHKD BY	DATE		
APPVD BY	DATE	SCALE: 1:12 (D SIZE)	SHEET: SHEET 1 OF 1

DRAWINGS 90140/91140 FLY-SHEET

DELTA JOB NUMBER: 7976A AND 7976B

CUSTOMER: ANIXTER INC.
P.O. 597-543352-431
AMERICAN EMBASSY – MUSCAT, OMAN

DATE: January 27, 2012

THIS FLY-SHEET COVERS JOB SPECIFIC TABULATIONS TO DELTA DRAWINGS 90140/91140.

	S/N 7976A-1, 7976A-2, 7976B-1 AND 7976B-2 (FOUR DSC207S PHALANX BARRIERS)
'A' LENGTH, BARRIER WIDTH:	109 INCHES [277 CM]
'B' LENGTH, FRAME WIDTH:	114.5 INCHES [291 CM]
'C' LENGTH, OVERALL WIDTH:	122.5 INCHES [311 CM]
'D' LENGTH, FOUNDATION WIDTH:	138 INCHES [351 CM]
'E' LENGTH, INSIDE FRAME WIDTH:	110 INCHES [279 CM]
WEIGHT, APPROXIMATE:	5,500 POUNDS [2,500 KG]
'A' OPTION HEATER:	NO BARRIER HEATER
'B' OPTION LIMIT SWITCH, DOWN:	B2005, FULLY DOWN POSITION
'C' OPTION LIMIT SWITCH, UP:	NO UP LIMIT SWITCH
DOWN LIMIT SWITCH STOCK NUMBER:	2465-27 (MAGNETIC STYLE)
UP LIMIT SWITCH STOCK NUMBER:	NO UP LIMIT SWITCH
CYLINDER STOCK NUMBER:	2468-10 (3" X 10")
B1207 DRAGON TOOTH MOD:	DRAGON TOOTH PROVIDED
BARRIER SURFACE PREPARATION:	HOT DIP GALVANIZE
BARRIER FINISH:	STANDARD ENAMEL PAINT FINISH, WHITE WITH 6" WIDE YELLOW STRIPES

COPYRIGHT 2012 DELTA SCIENTIFIC CORPORATION
ALL RIGHTS RESERVED

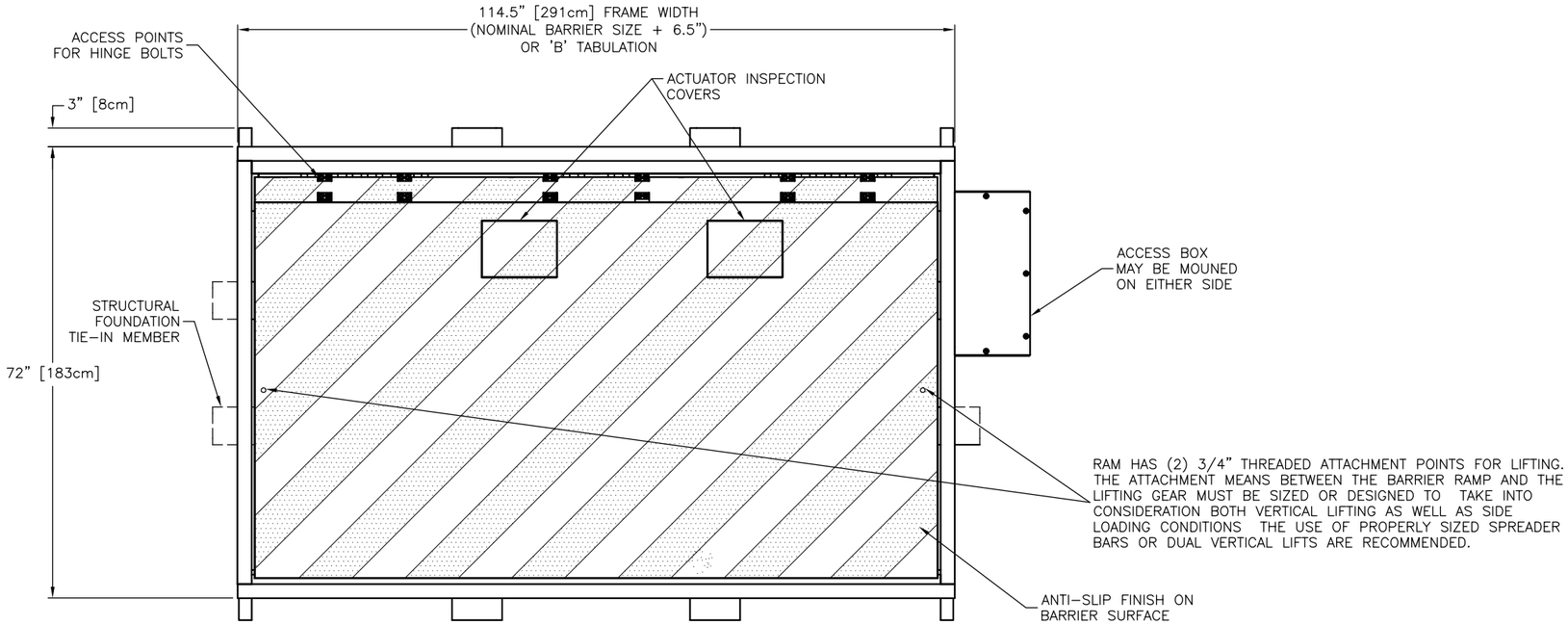

PLAN VIEW – DOWN POSITION

NOTES:

1. OPTIONAL AVAILABLE FEATURES (PARTIAL)

		PART NO.
(A)	HEATER, 1400 WATTS @ 120 VOLTS	B1293
(A)	HEATER, 1400 WATTS @ 240 VOLTS	B1294
(B)	LIMIT SWITCH, FULLY DOWN	B2005
(C)	LIMIT SWITCH, FULLY UP	B2006
(D)	HOT-DIP GALVANIZING PRIOR TO PAINTING	GALV

2. COLOR OPTIONS:

   WHITE W/6" WIDE YELLOW STRIPES
   BLACK W/6" WIDE YELLOW STRIPES
   WHITE W/6" WIDE RED STRIPES

   FOUNDATION – ASBESTOS FREE ASPHALT EMULSION UNDERCOAT.

3. ALL STEEL MEMBERS PER AISC STANDARDS
   WELDING DESIGN CRITERIA AWS D1.1, LATEST REVISION.

4. ALL MILD STEEL COMPONENTS SANDBLASTED TO NEAR
   WHITE METAL AFTER FABRICATION AND PRIOR TO COATING.

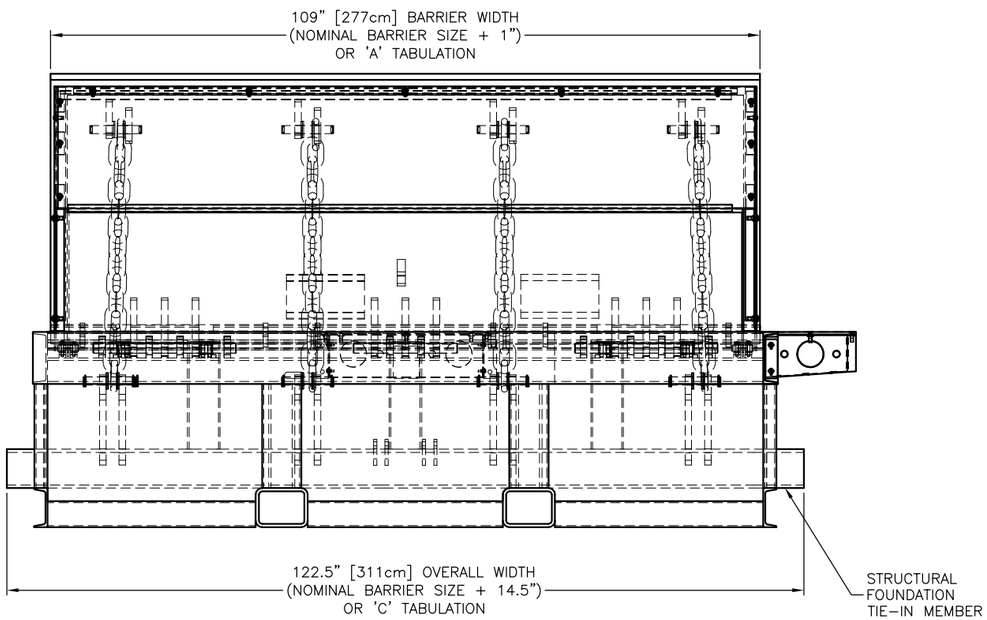

FRONT ELEVATION – UP POSITION

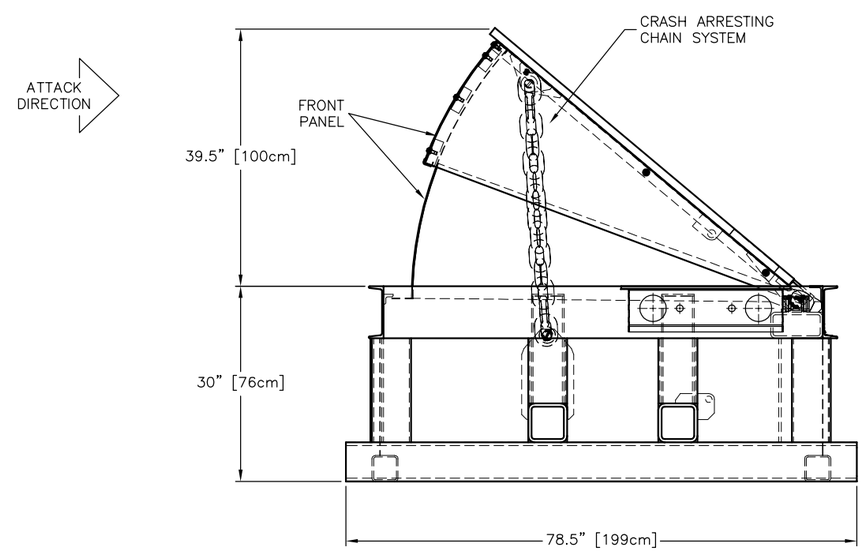

SIDE ELEVATION – UP POSITION

PHALANX™

THIS DRAWING UNLESS OTHERWISE NOTED, REMAINS THE CONFIDENTIAL PROPERTY AND TRADE SECRET OF DELTA SCIENTIFIC CORPORATION. IT SHALL NOT BE DISCLOSED, REPRODUCED OR USED FOR MANUFACTURE, DESIGN OR CONSTRUCTION WITHOUT THE EXPRESS AUTHORIZATION OF DELTA SCIENTIFIC CORPORATION. THE RECIPIENT BY ACCEPTING THIS DRAWING, ASSUMES CUSTODY THEREOF AND UNDER THE ABOVE TERMS AGREES NOT TO ALLOW USE OF BY UNAUTHORIZED PERSONS.

© 1996
ALL RIGHTS RESERVED

UNLESS OTHERWISE NOTED DIMENSIONS ARE IN INCHES

TOLERANCES
.X = ±.250/FT
.XX = ±.125/FT
.XXX = ±.063/FT

DELTA SCIENTIFIC CORPORATION
40355 DELTA LANE
PALMDALE, CA 93551 U.S.A.
(661) 575-1100 FAX (661) 575-1109

DSC207S BARRIER
GENERAL ARRANGEMENT

DRWN BY	DATE	DRAWING NO.	REV.
J. MANOR	6/13/11	90140	–
CHKD BY	DATE		
APPVD BY	DATE	SCALE: 1:12	SHEET 1 OF 1

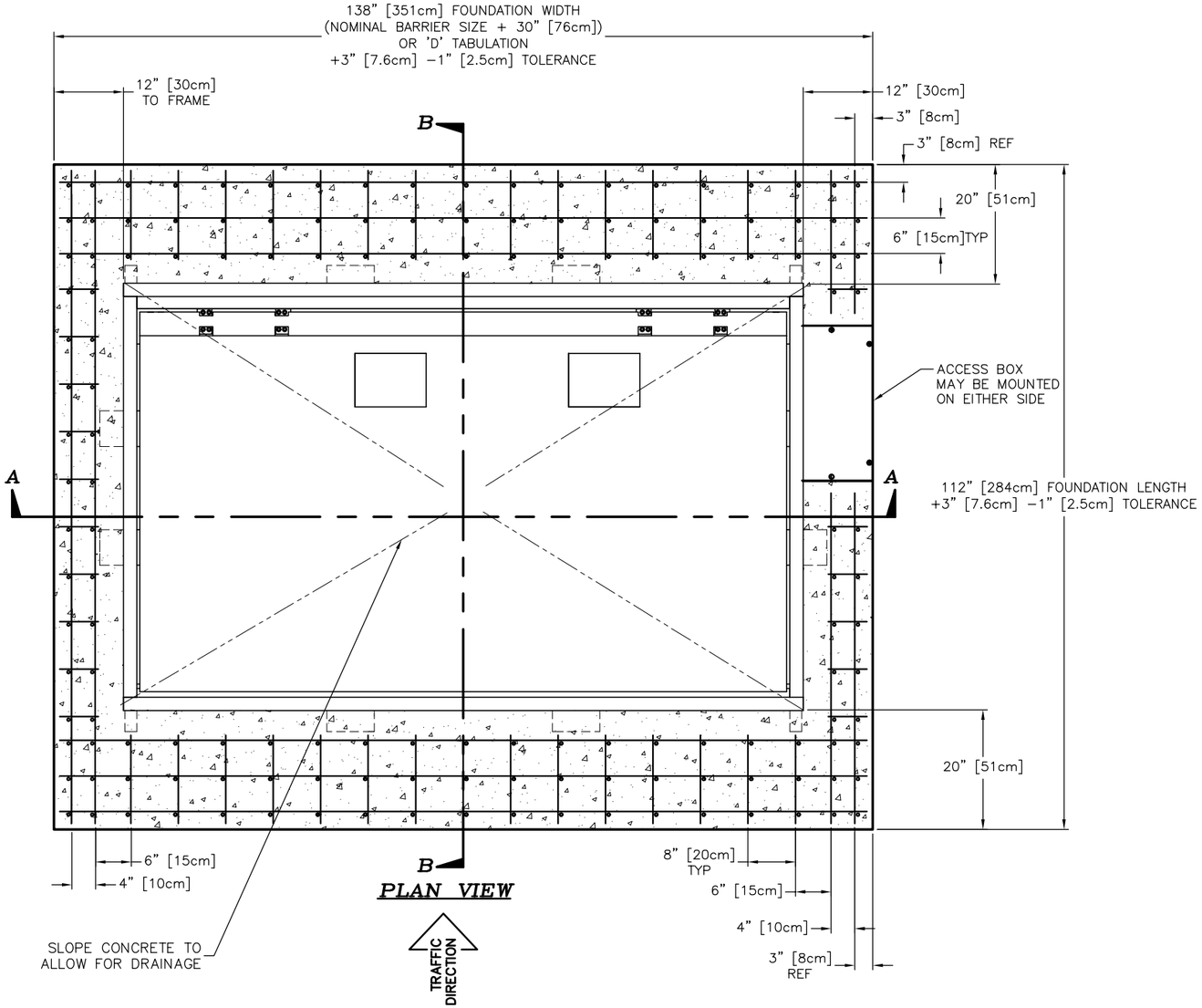

PLAN VIEW

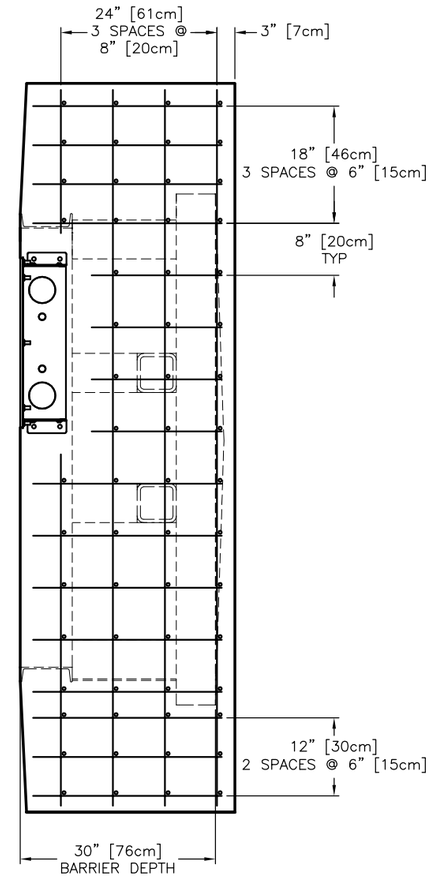

SIDE VIEW

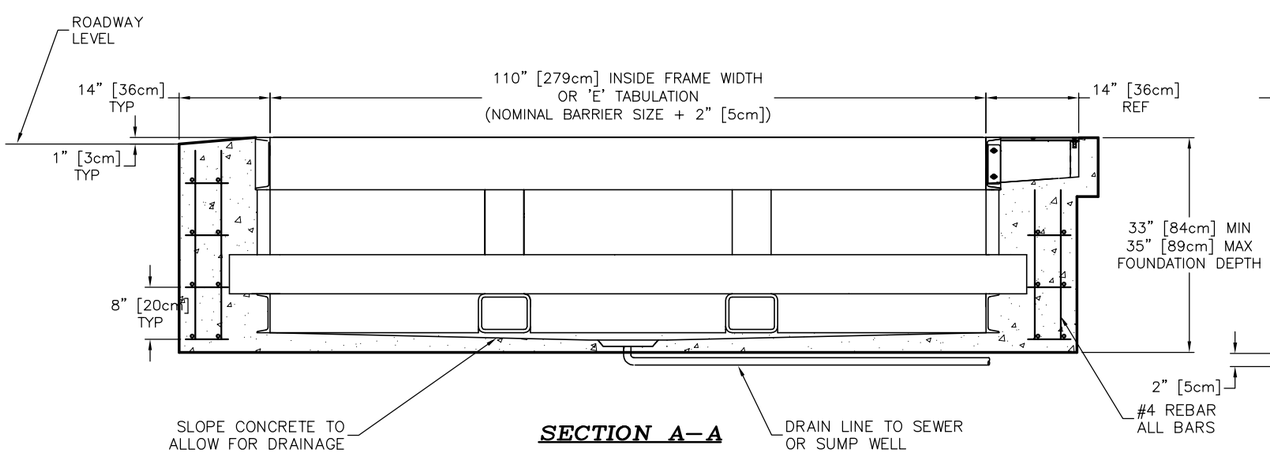

SECTION A–A

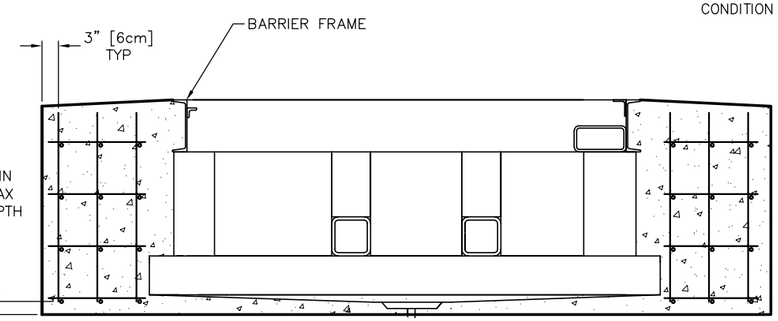

SECTION B–B

CONCRETE NOTES & RECOMMENDED SPECIFICATIONS:

1. CONTRACTOR SHALL VERIFY AND BE RESPONSIBLE FOR ALL DIMENSIONS AND CONDITIONS AT THE JOB SITE.
2. FOUNDATION CONCRETE MAY BE PLACED DIRECTLY INTO NEAT EXCAVATIONS, PROVIDED THE SIDES OF THE EXCAVATION ARE STABLE. WHERE CAVING OCCURS, PROVIDE SHORING. TYPE AND METHOD OF SHORING SHALL BE AT CONTRACTORS OPTION.
3. THE EXCAVATION SHALL BE KEPT DRY AT ALL TIMES. GROUND WATER, IF ENCOUNTERED, SHALL BE PUMPED FROM THE EXCAVATION.
4. CONCRETE SHALL BE LABORATORY DESIGNED, MACHINE MIXED, PRODUCING 3,000 PSI (20,68 MPA) AT 28 DAYS.
5. CEMENT SHALL BE TESTED PORTLAND CEMENT CONFORMING TO ASTM C150, TYPE II ONLY.
6. AGGREGATES SHALL CONFORM TO ASTM C33 & B GRADE PER STANDARD SPECIFICATIONS. MAXIMUM SIZE OF AGGREGATE SHALL BE 1–1/2 INCHES (38mm).
7. REINFORCING STEEL SHALL BE DEFORMED BARS CONFORMING TO ASTM A615, GRADE 60 (60,000 PSI OR 413.7MPA).
8. HOOKS AND BENDS SHALL CONFORM TO ACI STANDARD 318. LATEST REVISION. INSIDE DIAMETER OFF HOOKS AND BENDS SHALL BE AT LEAST SIX (6) BAR DIAMETERS.
9. PROVIDE SPACER BARS, CHAIRS, SPREADERS, BLOCKS, ETC. AS REQUIRED TO POSITIVELY HOLD THE STEEL IN PLACE BEFORE CONCRETE IS POURED.
10. CONCRETE SHALL BE CONVEYED FROM THE MIXER TO FINAL DEPOSIT BY METHODS THAT WILL PREVENT SEPARATION OR LOSS OF MATERIALS.
11. CONCRETE SHALL BE THOROUGHLY CONSOLIDATED BY SUITABLE MEANS DURING PLACEMENT AND SHALL BE THOROUGHLY WORKED AROUND REINFORCEMENT AND EMBEDDED FIXTURES AND CORNERS OF FORMS.
12. CONCRETE SHALL BE MAINTAINED ABOVE 50°F (10°C) AND IN A MOIST CONDITION FOR AT LEAST SEVEN (7) DAYS AFTER PLACEMENT. ADEQUATE EQUIPMENT SHALL BE PROVIDED FOR HEATING CONCRETE MATERIALS AND PROTECTING CONCRETE DURING FREEZING OR NEAR FREEZING WEATHER.
13. WHERE EXTERIOR WALL FACE REQUIRES SHORING AND/OR FORMING, THE FORMS SHALL BE SUBSTANTIAL AND SUFFICIENTLY TIGHT TO PREVENT LEAKAGE. FORMS SHALL NOT BE REMOVED UNTIL THE CONCRETE IS SEVEN (7) DAYS OLD.
14. BACKFILLING SHALL BE DONE BY DEPOSITING AND TAMPING INTO PLACE CLEAN SAND OR POURING LEAN CONCRETE, TO 95% COMPACTION. WATER JETTING SHALL NOT BE ALLOWED.
15. CONDUITS AND PIPES OF ALUMINUM SHALL NOT BE ALLOWED.
16. CONSTRUCTION JOINTS NOT INDICATED ON THE DRAWINGS SHALL NOT BE ALLOWED. WHERE A CONSTRUCTION JOINT IS TO BE MADE, THE SURFACE OF THE CONCRETE SHALL BE THOROUGHLY CLEANED AND ALL LAITANCE AND STANDING WATER REMOVED.
17. CONTRACTOR SHALL BE RESPONSIBLE FOR THE PROTECTION OF ALL ADJACENT AREAS AGAINST DAMAGE AND SHALL REPAIR OR PATCH ALL DAMAGED AREAS TO MATCH EXISTING IMPROVEMENTS.
18. CONTRACTOR SHALL KEEP THE CONSTRUCTION AREA CLEAN AT ALL TIMES AND AT COMPLETION OF WORK, REMOVE ALL SURPLUS MATERIALS, EQUIPMENT AND DEBRIS AND LEAVE THE PREMISES IN A CLEAN CONDITION ACCEPTABLE TO THE OWNER OR OWNER'S REPRESENTATIVE.

THIS DRAWING UNLESS OTHERWISE NOTED, REMAINS THE CONFIDENTIAL PROPERTY AND TRADE SECRET OF DELTA SCIENTIFIC CORPORATION. IT SHALL NOT BE DISCLOSED, REPRODUCED OR USED FOR MANUFACTURE, DESIGN OR CONSTRUCTION WITHOUT THE EXPRESS AUTHORIZATION OF DELTA SCIENTIFIC CORPORATION. THE RECIPIENT BY ACCEPTING THIS DRAWING, ASSUMES CUSTODY THEREOF AND UNDER THE ABOVE TERMS AGREES NOT TO ALLOW USE OF BY UNAUTHORIZED PERSONS.

© 2012
ALL RIGHTS RESERVED

DELTA SCIENTIFIC CORPORATION
40355 DELTA LANE
PALMDALE, CA 93551 U.S.A.
(661) 575–1100 FAX (661) 575–1109

DSC207S BARRIER
FOUNDATION SPECIFICATION

DRWN BY	DATE	DRAWING NO.	REV.
J. MANOR	6/10/11	91140	—
CHKD BY	DATE		
APPVD BY	DATE	SCALE: 1:12 (D SIZE)	SHEET 1 OF 1

DRAWING 90502 FLY-SHEET

DELTA JOB NUMBER: 7976A AND 7976B

CUSTOMER: ANIXTER INC.
P.O. 597-543352-431
AMERICAN EMBASSY – MUSCAT, OMAN

DATE: January 27, 2012

THIS FLY-SHEET COVERS JOB SPECIFIC TABULATIONS TO DELTA DRAWING 90502.

	S/N 7976A-HPU AND 7976B-HPU (TWO HYDRAULIC POWER UNITS)
'H' HORSEPOWER @ 'V' MOTOR VOLTAGE:	5 HP @ 415/3/50
'M' MOTOR STOCK NUMBER:	2464-185
B1020 AUXILARY EFO OPTION:	NO AUXILIARY EFO
B1325 HANDPUMP OPTION:	YES, STOCK NUMBER 2471-21
ACCUMULATOR STOCK NUMBER:	2469-94
ACCUMULATOR PRECHARGE PRESSURE:	1,000 PSIG DRY NITROGEN
B1190/B1191 OIL HEATER OPTION:	NO OIL HEATER
B1195/B1196 OIL COOLER OPTION:	NO OIL COOLER
MOTOR STARTER DRAWING NUMBER:	90610-2/D
B1260 DISCONNECT OPTION:	YES, STOCK NUMBER 2531-113
WEIGHT, POUNDS [KILOGRAMS]:	750 POUNDS [341 KG]
HPU ENCLOSURE:	YES, STOCK NUMBER B1218 [WHITE]
WEIGHT IN ENCLOSURE, POUNDS [KG]:	1,815 POUNDS [823 KG]
HPU ENCLOSURE DRAWING:	DWG 90562/A

COPYRIGHT 2012 DELTA SCIENTIFIC CORPORATION
ALL RIGHTS RESERVED

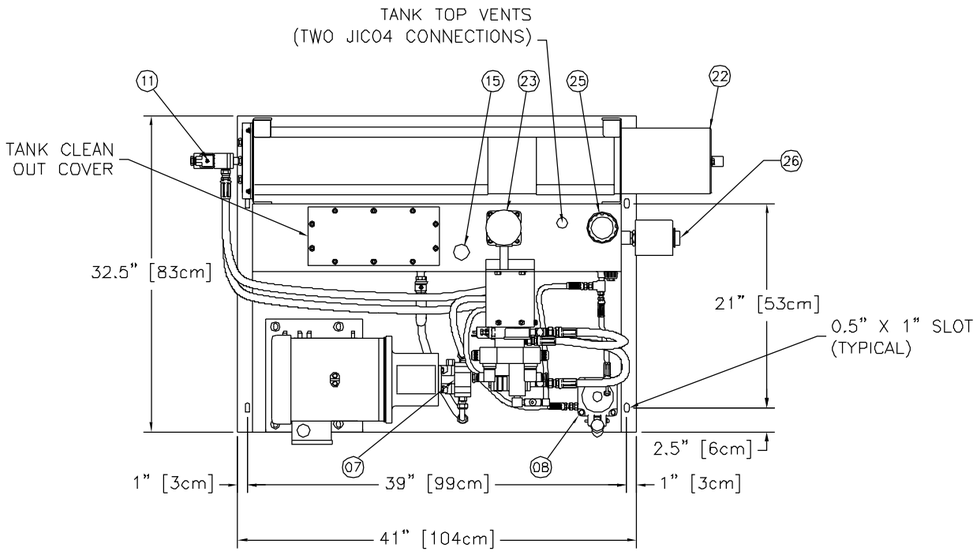

	ITEM	REQ'D	MATERIAL DESCRIPTION	STK. NO.
	01	1	HPU, TANK AND FRAME	8050-00
	02	1	MOTOR, 'H' HP @ 'V'	2464-'M'
	03	1	PUMP/MOTOR ADAPTER,	2464-32
	04	1	PUMP HALF COUPLING,	2464-53
	05	1	MOTOR HALF COUPLING,	2464-52
	06	1	COUPLING SPIDER,	2464-61
	07	1	HYD PUMP, 0.258 IN3/REV,	2471-27
OPTIONAL	08	0 or 1	HANDPUMP,	2471-21
	09	2	VALVE,SOLENOID, D03, 24 VDC, SPRING DETENTED	2467-01
	10	2	VALVE, EFO, 24 VDC,	2467-31
OPTIONAL	11	0 or 1	VALVE, AUXILARY EFO, 24 VDC, B1020 OPTION	2467-33
	12	1	MANIFOLD, ISO 03, DUAL STATION	2467-72
	13	1	PRESSURE SWITCH, 1400/1900 PSIG,	2465-01
	14	1	PRESSURE RELIEF VALVE,	2465-05
	15	1	LEVEL SWITCH,	2465-11
	16	1	PRESSURE GUAGE, 0-3000 PSIG,	2465-21
	17	1	LEVEL GAUGE, 10",	2465-22
	18	1	GAUGE SNUBBER,	2465-23
	19	4	VALVE, FLOW CONTROL, 1/2" NPT,	2466-03
	20	1	VALVE, NEEDLE, 1/4" NPT,	2466-11
	21	1	VALVE, BALL, 1/2" NPT, BRONZE	2466-33B
	22	2	ACCUMULATOR,	2469-72
	23	1	FILTER ELEMENT/HOUSING,	2470-02
	24	1	SUCTION STRAINER,	2470-41
	25	1	FILLER BREATHER,	2470-43
OPTIONAL	26	0 or 1	TANK HEATER, B1190 or B1191 OPTION	2465-xx
OPTIONAL	27	0 or 1	OIL RESERVOIR COOLER (AIR), B1196 OPTION	2465-xx
OPTIONAL	28	0 or 1	OIL COOLER, WATER COOLED, B1195 OPTION	2465-52
OPTIONAL	29	0 or 1	OIL COOLER WATER THERMOSTAT, B1195 OPTION	2465-53
	30	1	MOTOR STARTER, CONTROL CIRCUIT	906xx
OPTIONAL	31	0 or 1	DISCONNECT SWITCH, B1260 OPTION	2531-110

TOTAL WEIGHT = 750 POUNDS [340 KG]

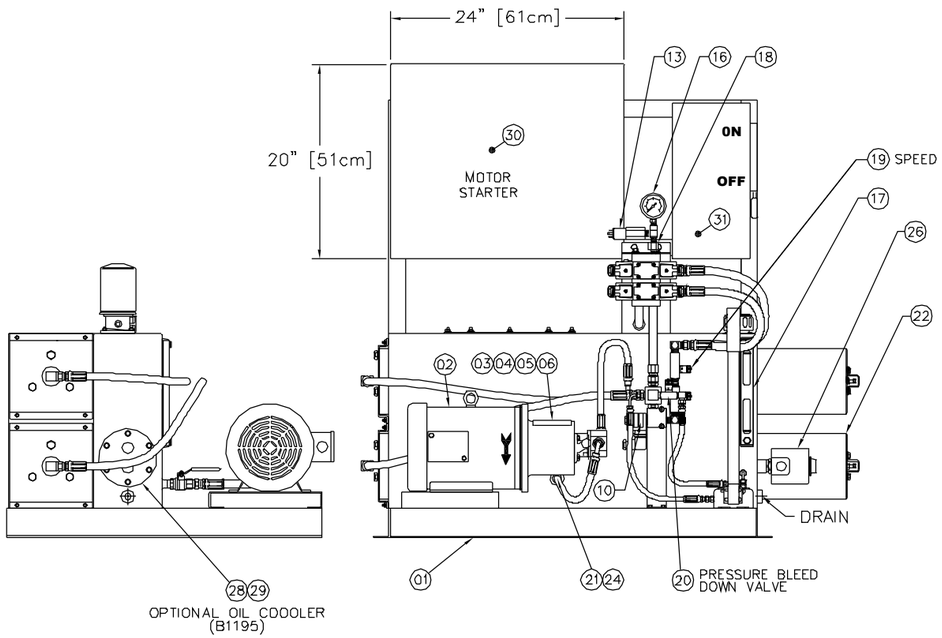

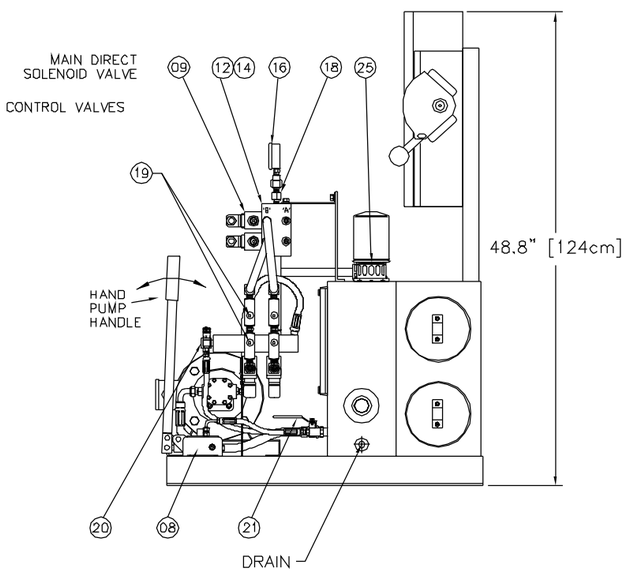

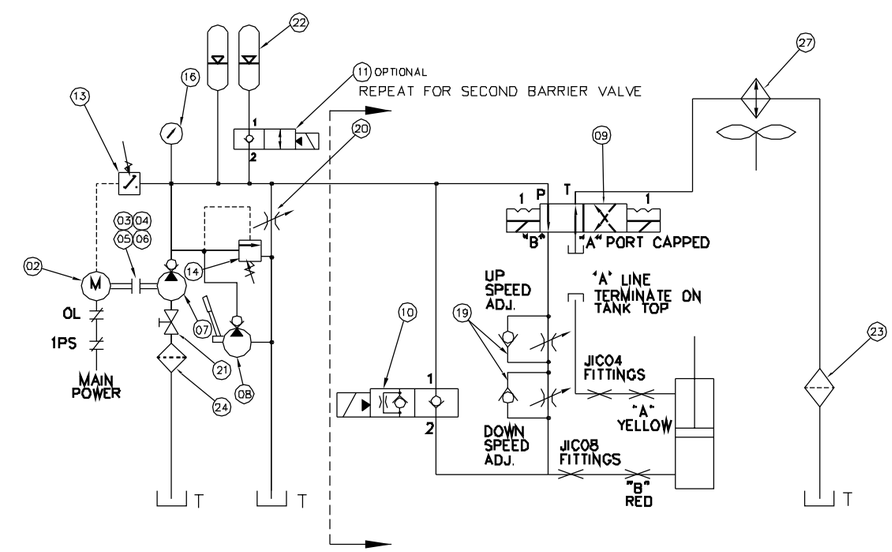

TYPICAL HYDRAULIC FLOW SCHEMATIC

REV.	DESCRIPTION	DRWN BY	DATE	APPVD BY	DATE
D	ECO #2004-020	JNF	02/03/04		
C	ECO #2003-081	JNF	05/02/03		
B	ADDED WATER COOLED OPTION	JNF	10/03/01		
A	ADDED AUXILARY EFO FEATURE AS OPTION	JNF	12/13/99		

THIS DRAWING UNLESS OTHERWISE NOTED, REMAINS THE CONFIDENTIAL PROPERTY AND TRADE SECRET OF DELTA SCIENTIFIC CORPORATION. IT SHALL NOT BE DISCLOSED, REPRODUCED OR USED FOR MANUFACTURE, DESIGN OR CONSTRUCTION WITHOUT THE EXPRESS AUTHORIZATION OF DELTA SCIENTIFIC CORPORATION. THE RECIPIENT BY ACCEPTING THIS DRAWING, ASSUMES CUSTODY THEREOF AND UNDER THE ABOVE TERMS AGREES NOT TO ALLOW USE OF BY UNAUTHORIZED PERSONS.

© 2004
ALL RIGHTS RESERVED

UNLESS OTHERWISE NOTED DIMENSIONS ARE IN INCHES

TOLERANCES
.X = ±.080/FT
.XX = ±.030/FT
.XXX = ±.010/FT
ANGLES = ±.5°

SURFACE FINISH
125

REMOVE ALL BURRS & BREAK SHARP EDGES .02 MAX

DELTA SCIENTIFIC CORPORATION
40355 DELTA LANE
PALMDALE, CA 93551 U.S.A.
(661) 575-1100 FAX (661) 575-1109

DELTA HYDRAULIC POWER UNIT – DUAL BARRIERS – GENERAL ARRANGEMENT

DRWN BY	DATE	DRAWING NO.	REV.
J.FRIEND	07/15/99	90502	D
CHKD BY	DATE		
APPVD BY	DATE	SCALE: 1:8 (D SIZE)	SHEET: SHEET 1 OF 1

ITEM	REQ'D	DESCRIPTION	STK. NO.	WEIGHT
01	1	B1218 HPU ENCLOSURE ASSEMBLY	7436-00	1065 POUNDS
02	1	HYDRAULIC POWER UNIT	905xx	xxxx POUNDS
			TOTAL WT:	xxxx POUNDS

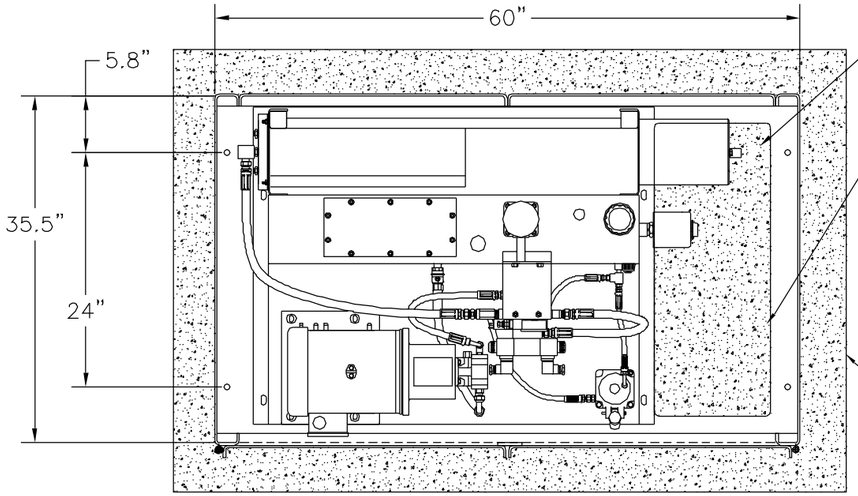

PLAN VIEW (ROOF REMOVED)

OVERHEAD INFRINGEMENT IN STUB-UP AREA

STUB-UP AREA - 6.5 [165] x 31.0 [787]
KEEP THIS AREA AVAILIBLE FOR
CONDUIT ENTERING/LEAVING HPU

3.0 INCH IPS SCH. 40 PVC
(OR EQUIVALENT) - ONE REQUIRED PER BARRIER OR BOLLARD

* ALTERNATE HYDRAULIC:
RIGID STEEL PIPE MAY BE
SUBSTITUTED FOR HOSE/PVC
CONDUIT SYSTEM

ELECTRICAL CONDUIT:
(1 EA) - PER BARRIER OR BOLLARD LIMIT SWITCH
(1) - MAIN POWER FEED
(1 EA) - PER BARRIER OR BOLLARD HEATER (OPTIONAL)
(1 LOT) - CONTROL CONDUIT AS REQUIRED

ALL SUPPLIED BY INSTALLING CONTRACTOR

CONCRETE FOUNDATION
(CUSTOMER FURNISHED)

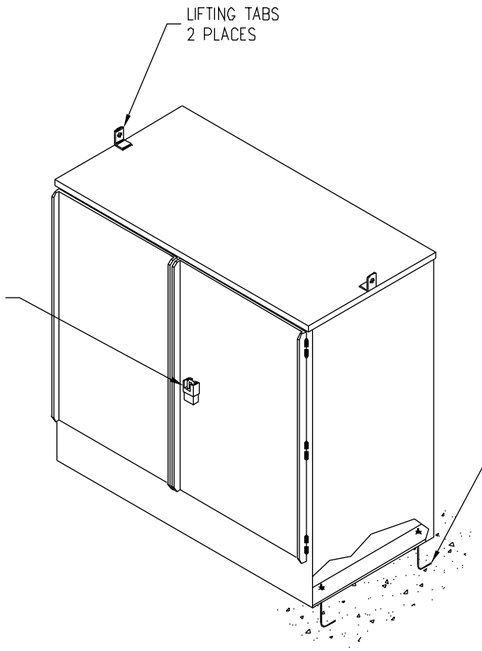

ENCLOSURE ATTACHMENT NOTES:

5/16" LEG ANCHOR BOLT
4 REQUIRED
* ALTERNATE LAG SCREW/LAG SCREW SHIELD
/MASONRY ANCHOR/
ALL INSTALLER SUPPLIED

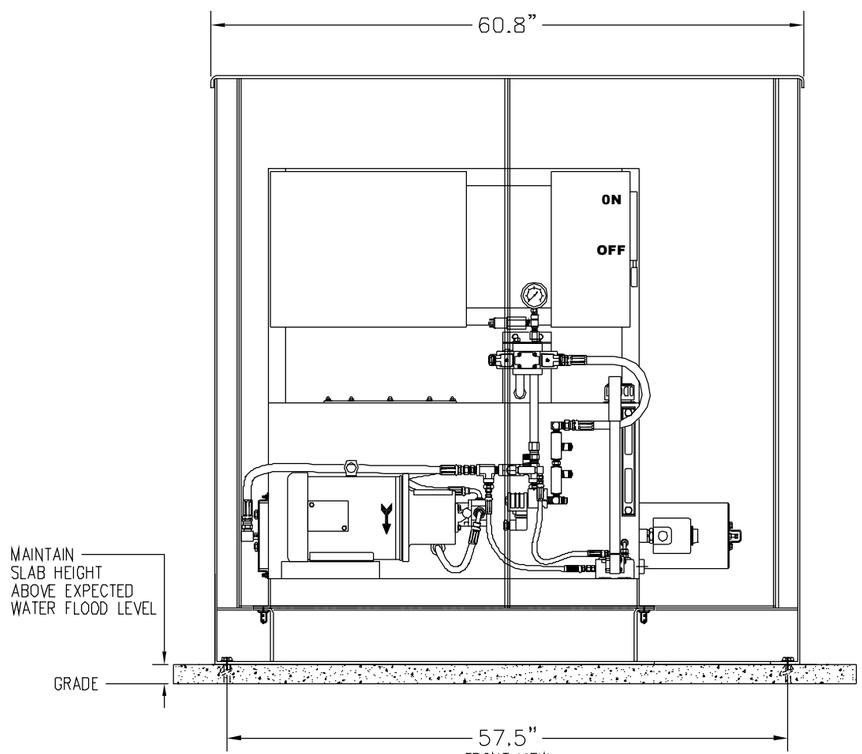

FRONT VIEW

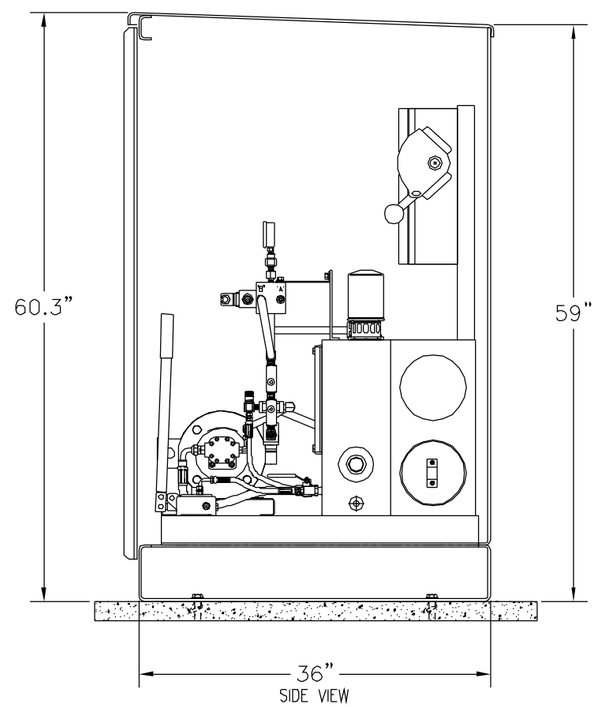

SIDE VIEW

NOTES:

1) COVER IS 0.25 INCH THICK MILD STEEL.
2) FURNISHED STANDARD SHOP PRIMER (GRAY)
FINISH COAT - INDUSTRIAL ENAMEL (WHITE)
3) PADLOCK FURNISHED BY OTHERS
4) AREA UNDER HPU SKID REPRESENTS
OIL DRIP PAN, 35" X 45" X 6" DEEP.
5) MAXIMUM HPU HEIGHT IS 53 INCHES.

THIS DRAWING UNLESS OTHERWISE NOTED, REMAINS THE CONFIDENTIAL PROPERTY AND TRADE SECRET OF DELTA SCIENTIFIC CORPORATION. IT SHALL NOT BE DISCLOSED, REPRODUCED OR USED FOR MANUFACTURE, DESIGN OR CONSTRUCTION WITHOUT THE EXPRESS AUTHORIZATION OF DELTA SCIENTIFIC CORPORATION. THE RECIPIENT BY ACCEPTING THIS DRAWING ASSUMES CUSTODY THEREOF AND UNDER THE MEANS TERMS AGREES NOT TO ALLOW USE OF BY UNAUTHORIZED PERSONS.

© 2003
ALL RIGHTS RESERVED

UNLESS OTHERWISE NOTED DIMENSIONS ARE IN INCHES

TOLERANCES
.X = ±.060/FT
.XX = ±.030/FT
.XXX = ±.010/FT
ANGLES = ±.5°

SURFACE FINISH
125

REMOVE ALL BURRS & BREAK SHARP EDGES .02 MAX

DELTA SCIENTIFIC CORPORATION
40355 DELTA LANE
PALMDALE, CA 93551 U.S.A.
(661) 575-1100 FAX (661) 575-1109

B1218, FORCE RESISTANT HEAVY DUTY HPU ENCLOSURE, 1/4" PLATE CONSTRUCTION

DRWN BY	DATE	DRAWING NO.	REV.
R.ROBREDO	10/12/00	90562	-
CHKD BY	DATE		
APPVD BY	DATE	SCALE: 1:8 (D SIZE)	SHEET 1 OF 1

MAIN DIRECTION CONTROL VALVE
(ON MANIFOLD)

HANDPUMP
(ON POWER UNIT BASE)

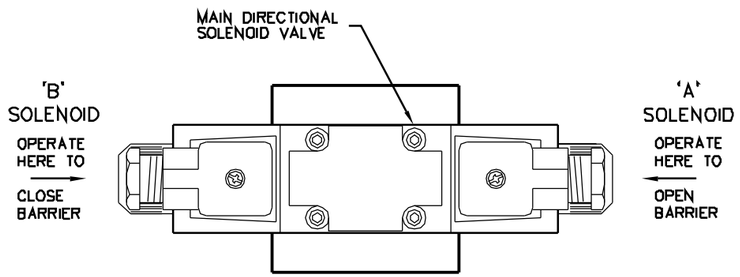

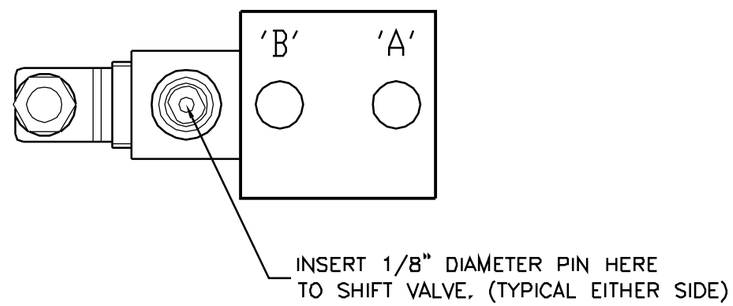

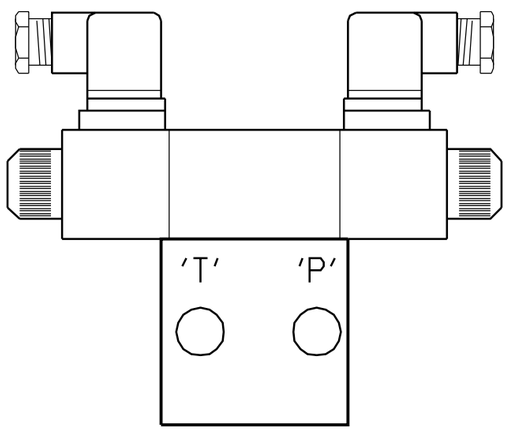

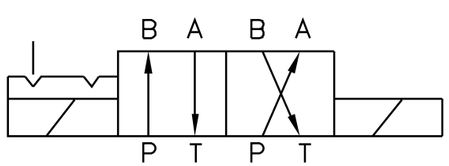

VALVE SYMBOL

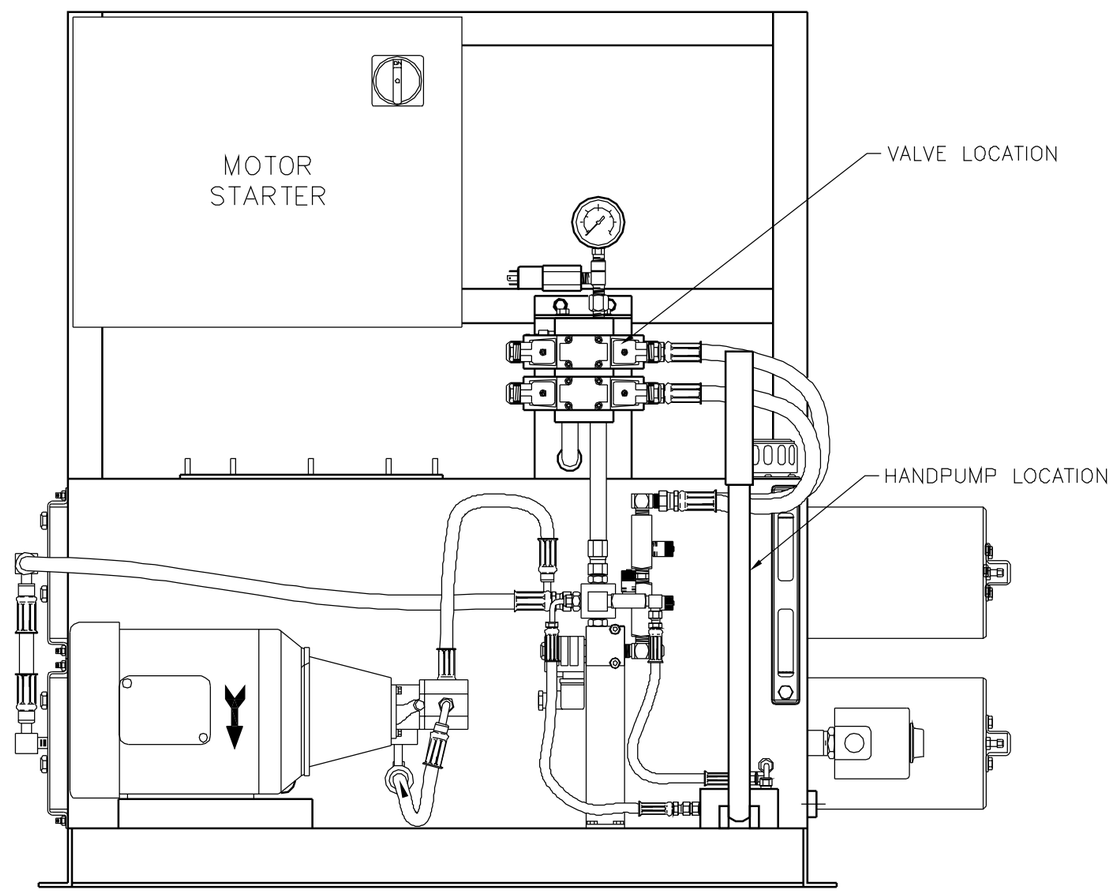

FRONT ELEVATION

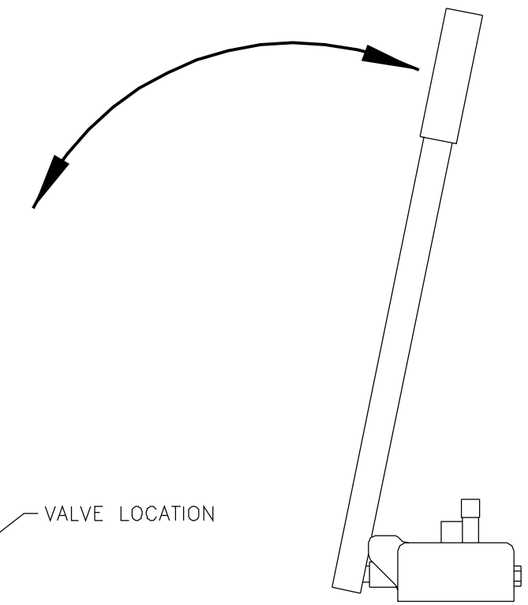

MANUAL OPERATION INSTRUCTIONS:

1) SHIFT VALVE FROM LEFT TO CLOSE OR FROM RIGHT TO OPEN THE BARRIER.

2) OPERATE THE HANDPUMP UNTIL BARRIER IS IN THE DESIRED POSITION.

REV.	DESCRIPTION	DRWN BY	DATE	APPVD BY	DATE
A	ECO #2003-42	JNF	01/21/03		

THIS DRAWING UNLESS OTHERWISE NOTED, REMAINS THE CONFIDENTIAL PROPERTY AND TRADE SECRET OF DELTA SCIENTIFIC CORPORATION. IT SHALL NOT BE DISCLOSED, REPRODUCED OR USED FOR MANUFACTURE, DESIGN OR CONSTRUCTION WITHOUT THE EXPRESS AUTHORIZATION OF DELTA SCIENTIFIC CORPORATION. THE RECIPIENT BY ACCEPTING THIS DRAWING, ASSUMES CUSTODY THEREOF AND UNDER THE ABOVE TERMS AGREES NOT TO ALLOW USE OF BY UNAUTHORIZED PERSONS.

© 2001
ALL RIGHTS RESERVED

UNLESS OTHERWISE NOTED DIMENSIONS ARE IN INCHES

TOLERANCES
.X = ±.080/FT
.XX = ±.030/FT
.XXX = ±.010/FT
ANGLES = ±.5°

SURFACE FINISH
125

REMOVE ALL BURRS & BREAK SHARP EDGES .02 MAX

DELTA SCIENTIFIC CORPORATION
40355 DELTA LANE
PALMDALE, CA 93551 U.S.A.
(661) 575-1100 FAX (661) 575-1109

MANUAL OPERATION INSTRUCTIONS
DELTA - SOLENOID VALVE AND HANDPUMP

DRWN BY	DATE	DRAWING NO.	REV.
J.FRIEND	05/29/97	90520	A
CHKD BY	DATE		
APPVD BY	DATE	SCALE: N.T.S.	SHEET: SHEET 1 OF 1

MAIN DIRECTION CONTROL VALVES
(ON MANIFOLD)

3-B

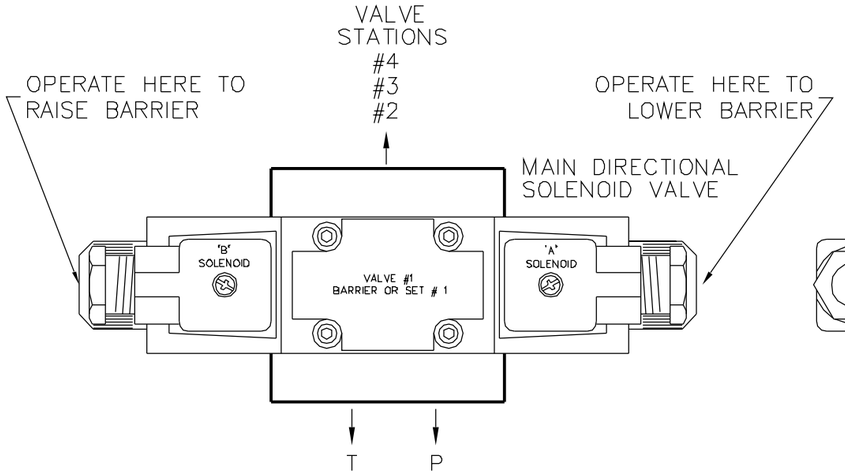

ELEVATION

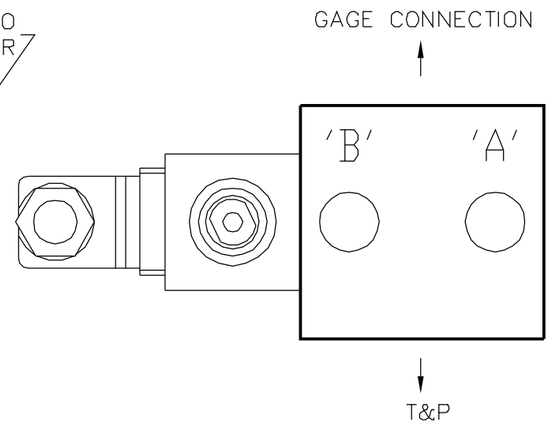

RIGHT ELEVATION

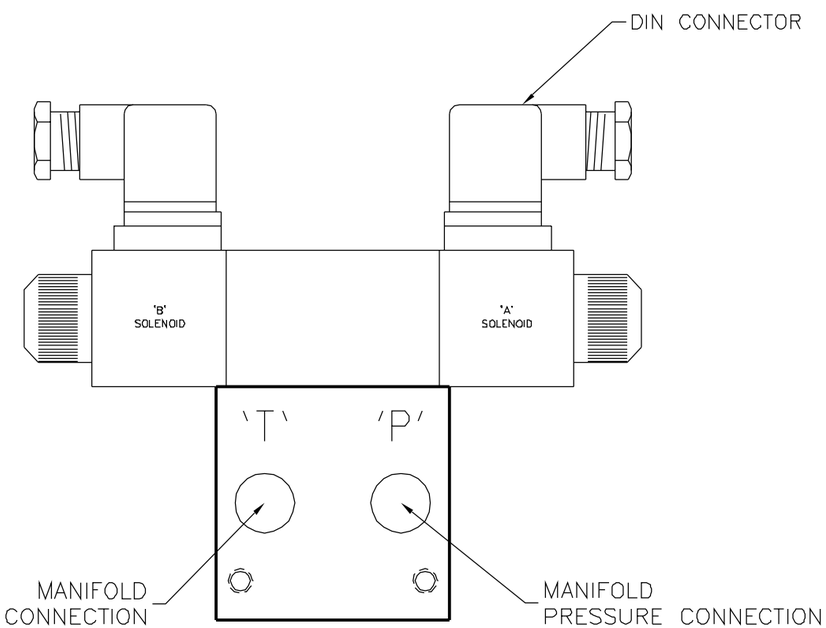

BOTTOM VIEW SHOWNING PRESSURE AND TANK CONNECTIONS

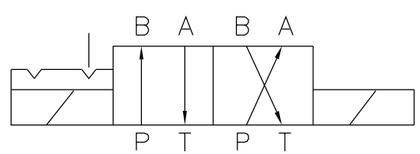

VALVE SYMBOL

SINGLE ACTING

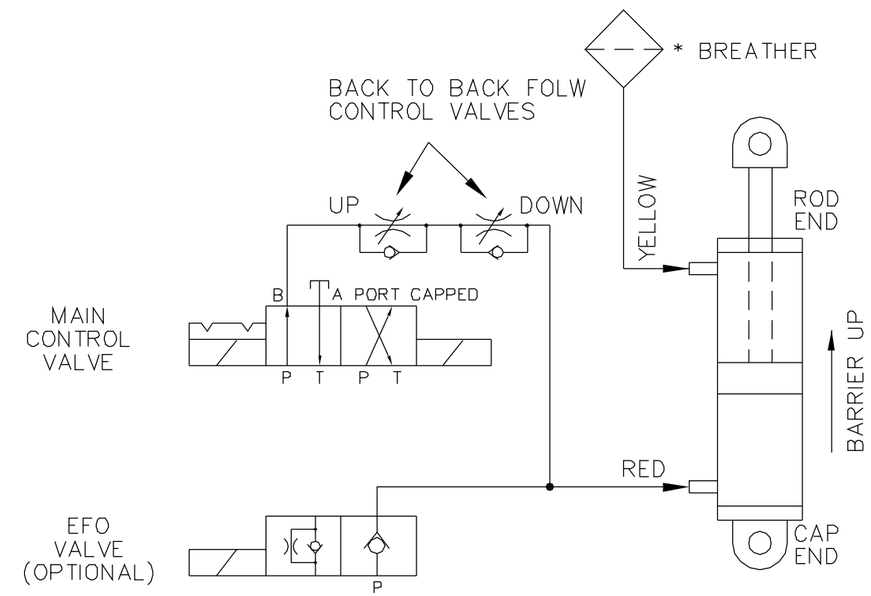

ADJUST UP SPEED AS DESIRED
ADJUST DOWN SPEED AS DESIRED

* BREATHER OR ALTERNATELY CONNECTED TO HPU TANK TOP

SPEED CONTROL VALVE

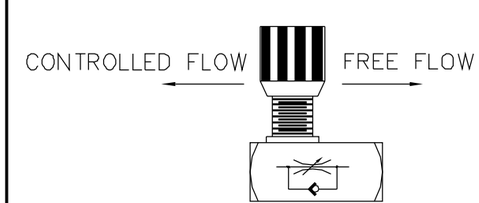

FLOW CONTROL VALVE

CLOCKWISE IS SLOWER
COUNTER CLOCKWISE
IS FASTER

THIS DRAWING UNLESS OTHERWISE NOTED REMAINS THE CONFIDENTIAL PROPERTY AND TRADE SECRET OF DELTA SCIENTIFIC CORPORATION. IT SHALL NOT BE DISCLOSED, REPRODUCED OR USED FOR MANUFACTURE, DESIGN OR CONSTRUCTION WITHOUT THE EXPRESS AUTHORIZATION OF DELTA SCIENTIFIC CORPORATION. THE RECIPIENT BY ACCEPTING THIS DRAWING, ASSUMES CUSTODY THEREOF AND UNDER THE ABOVE TERMS AGREES NOT TO ALLOW USE OF BY UNAUTHORIZED PERSONS.

© 2001
ALL RIGHTS RESERVED

UNLESS OTHERWISE NOTED DIMENSIONS ARE IN INCHES

TOLERANCES
.X = ±.060/FT
.XX = ±.030/FT
.XXX = ±.010/FT
ANGLES = ±.5°

SURFACE FINISH
125

REMOVE ALL BURRS & BREAK SHARP EDGES .02 MAX

DELTA SCIENTIFIC CORPORATION
40355 DELTA LANE
PALMDALE, CA 93551 U.S.A.
(661) 575-1100 FAX (661) 575-1109

VALVE CONNECTION DIAGRAM
BACK TO BACK FLOW CONTROL/S.A.

DRWN BY	DATE	DRAWING NO.	REV.
D.G.	04/27/88	90406	–
CHKD BY	DATE		
APPVD BY	DATE	SCALE: FULL (D SIZE)	SHEET: SHEET 1 OF 1

DRAWING 90610-2 FLY-SHEET

DELTA JOB NUMBER: 7976A AND 7976B

CUSTOMER: ANIXTER INC.
P.O. 597-543352-431
AMERICAN EMBASSY – MUSCAT, OMAN

DATE: January 27, 2012

THIS FLY-SHEET COVERS JOB SPECIFIC TABULATIONS TO DELTA DRAWING 90610-2.

	S/N 7976A-CC AND 7976B-CC (TWO CONTROL CIRCUITS)
'H' HORSEPOWER @ 'R' MOTOR RPM:	5 HP @ 2850 RPM
'V' MOTOR VOLTAGE:	415/3/50
'FL' MOTOR FULL LOAD AMPS:	7.5 AMPS
'CV' CONTROL CIRCUIT VOLTAGE:	240/1/50
'PSW' POWER SUPPLY WATTS / STK. NO:	150 WATTS, STOCK NUMBER 2461-25
'1FU' FUSE AND STOCK NUMBER:	1.5 AMPS, STOCK NUMBER 2459-15
'2FU' FUSE AND STOCK NUMBER:	7.5 AMPS, STOCK NUMBER 2459-12
'3FU'/'RHA' FUSE AND STOCK NUMBER:	NO OIL HEATER
'RW' OIL HEATER WATTS:	NO OIL HEATER
'4FU-9FU'/'BHA' FUSE AND STOCK NUMBER:	NO BARRIER HEATER
'HW' BARRIER HEATER WATTS:	NO BARRIER HEATER
WIRE COLOR CODE:	EUROPE
B1255 POWER MONITOR OPTION:	YES, STOCK NUMBER 2465-74
B1260 DISCONNECT OPTION:	YES, STOCK NUMBER 2531-113
STARTER STOCK NUMBER:	2531-108 (A-B 100-C16KL10)
OVERLOAD STOCK NUMBER:	2531-67 (A-B 193-ED1EB)

COPYRIGHT 2012 DELTA SCIENTIFIC CORPORATION
ALL RIGHTS RESERVED

MOTOR WIRING

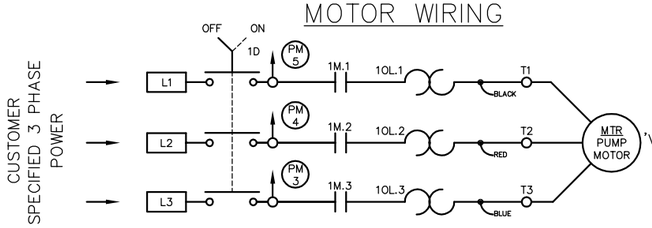

'H' HP @ 'R' RPM
'V' SPECIFIED 3 PHASE VOLTAGE
FLA = 'FL' AMP

LOCATION	L1	L2	L3	NEUTRAL	GROUND
USA – 200–250 VAC	BLACK	RED	BLUE	WHITE	GREEN *
USA – 400–500 VAC	BROWN	ORANGE	YELLOW	WHITE	GREEN *
CANADA	RED	BLACK	BLUE	WHITE	GREEN *
EUROPE	BROWN	BLACK	GREY	BLUE	GRN/YEL

* GROUND CONDUCTOR MAY BE BARE COPPER WIRE

	ITEM	REQ'D.	DESCRIPTION	STK. NO.
	1PCB–2PCB	2	DELTA PRINTED CIRCUIT BOARD ASSEMBLY,	90605–00
	1M	1	MOTOR STARTER,	2531–xx
	1OL	1	STARTER OVERLOAD,	2531–xx
OPTIONAL	1D	0 or 1	DISCONNECT, B1260 OPTION	2531–95
OPTIONAL	1PM	0 or 1	POWER MONITOR, B1255 OPTION	2465–6x
	1PS	1	POWER SUPPLY, 120/240 V, 50/60 HZ/24 VDC, 150 WATTS	2461–25
	1FU	1	FUSE, 250 VOLTS, 'PA' AMP, DUAL ELEMENT,	2459–xx
	2FU	1	FUSE, 250 VOLTS, 'SA' AMP, DUAL ELEMENT,	2459–xx
OPTIONAL	3FU	0 or 1	FUSE, 250 VOLTS, 'RHA' AMP, DUAL ELEMENT,	2459–xx
OPTIONAL	4FU–9FU	0 – 6	FUSE, 250 VOLTS, 'BHA' AMP, DUAL ELEMENT,	2459–xx
	1BAT–2BAT	2	BATTERY, 12 VOLT, 7 AMP–HOUR, YUASA NP7–12 OR EQ	2461–40
	01	1	ENCLOSURE, NEMA 1, 20" x 24" x 6",	2462–75
	02	1	CHASSIS PAN, 17" x 22.5"	2462–76
	03	9–16	TERMINALS, STANDARD BLOCK	2460–60
	04	1	TERMINALS, GROUNDING BLOCK	2460–61
	05	2	TERMINALS, END BLOCK	2460–62
	06	2–9	TERMINALS, FUSE BLOCK	2460–63

CONTROL CIRCUIT WIRING

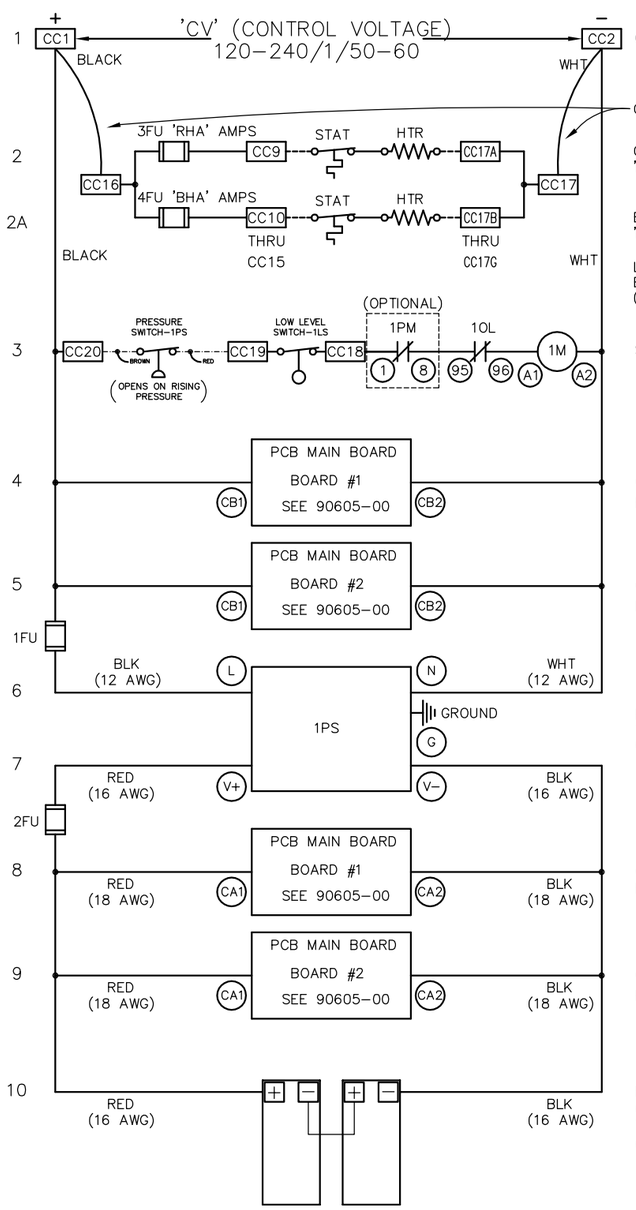

CONTROL POWER IN

OPTIONAL JUMPERS

OIL RESERVOIR HEATER
'RW' (RESERVOIR HEATER WATTS) @ 'CV'

BARRIER # 1 HEATER
'HW' @ 'CV'

LINE 4 REPEATS FOR THE NUMBER OF BARRIERS (BOLLARDS) IN THE ORDER (UP TO 6)

STARTER CIRCUIT

CONTROL BOARD
BARRIER # 1

CONTROL BOARD
BARRIER # 2

POWER SUPPLY
120/240 VAC TO 24 VDC
(SET SWITCH FOR CORRECT LINE VOLTAGE)

CONTROL BOARD
BARRIER # 1

CONTROL BOARD
BARRIER # 2

BACK–UP BATTERIES
(2) 12 VOLT IN SERIES
7 AMP–HOUR
(SET 1PS TO 27.2–27.5 VDC FOR BEST CHARGING)

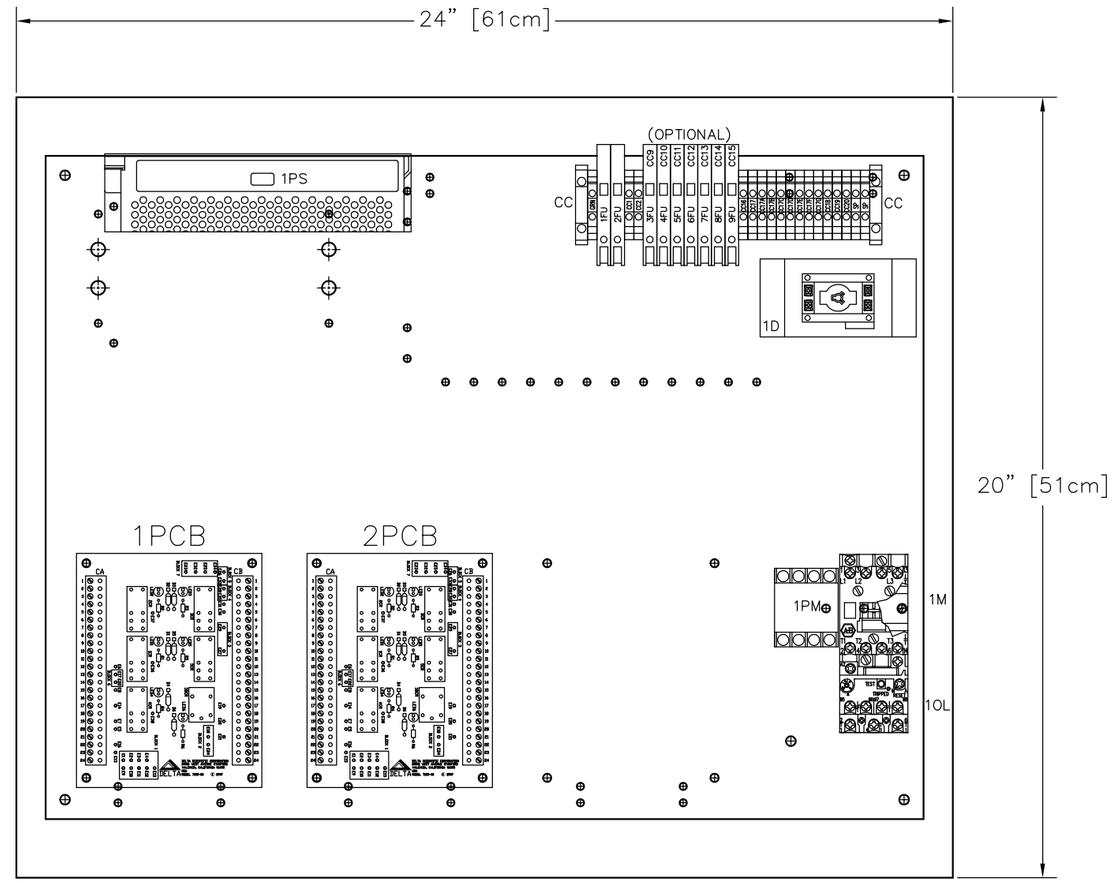

APPROXIMATE PARTS LOCATION ON CHASSIS PAN
ENCLOSURE CLASSIFICATION NEMA 1

REV.	DESCRIPTION	DRWN BY	DATE	APPVD BY	DATE
D	ECO #2011–022	JNF	02/09/11		
C	ECO #2007–148	JNF	12/07/07		
B	ECO #2003–80	JNF	05/02/03		
A	ADDED JUMPERS TO HEATER TERMINALS	JNF	09/14/01		

THIS DRAWING UNLESS OTHERWISE NOTED, REMAINS THE CONFIDENTIAL PROPERTY AND TRADE SECRET OF DELTA SCIENTIFIC CORPORATION. IT SHALL NOT BE DISCLOSED, REPRODUCED OR USED FOR MANUFACTURE, DESIGN OR CONSTRUCTION WITHOUT THE EXPRESS AUTHORIZATION OF DELTA SCIENTIFIC CORPORATION. THE RECIPIENT BY ACCEPTING THIS DRAWING, ASSUMES CUSTODY THEREOF AND UNDER THE ABOVE TERMS AGREES NOT TO ALLOW USE OF BY UNAUTHORIZED PERSONS.

© 2011
ALL RIGHTS RESERVED

UNLESS OTHERWISE NOTED DIMENSIONS ARE IN INCHES

TOLERANCES
.X = ±.060/FT
.XX = ±.030/FT
.XXX = ±.010/FT
ANGLES = ±.5°

SURFACE FINISH
125√

REMOVE ALL BURRS & BREAK SHARP EDGES .02 MAX

DELTA SCIENTIFIC CORPORATION
40355 DELTA LANE
PALMDALE, CA 93551 U.S.A.
(661) 575–1100 FAX (661) 575–1109

CONTROL CIRCUIT/MOTOR STARTER
DOUBLE BARRIER SYSTEM

DRWN BY	DATE	DRAWING NO.	REV.
J.FRIEND	11/18/98	90610–2	D
CHKD BY	DATE		
APPVD BY	DATE	SCALE: 1:2 (D SIZE)	SHEET 1 OF 1

ITEM	QUAN.	DESCRIPTION	STOCK NO.
1PCB	1	MAIN BOARD, DELTA PART	7195-00
D1-D6	6	DIODE, 1N4007	3546-D1
R1-R6	6	RESISTOR, 2.2K OHMS, 1/8 WATT	3546-R1
LED1-LED6	6	LED, H-P # HLMP-3750	3546-LED
1CR-5CR	5	RELAY, DPDT, 24 VDC, OMRON G2R-24-24VDC	2457-91
3BCR	1	RELAY, SPDT, 24 VDC, OMRON G5L-114P-PS-24VDC	2457-92
1S-3S	3	TRANSIENT SUPPRESSOR, P6KE62CA	7195-S1
1FU	1	FUSE, FAST ACTING, 2 A, WK3057BK-ND (MFG 37312000410)	7195-FU1
V1	1	VOLTAGE REGULATOR, 7812CT, 12 VOLT	7195-V1
01	1	TERMINAL STRIP HEADER, 24 PT, 5EHDRC-24, 1-24	2460-92
02	1	TERMINAL BLOCK, 24 PT, 5ESDV-24, 1-24	2460-93
03	1	TERMINAL STRIP HEADER, 24 PT, 5EHDRC-24, 24-1	2460-94
04	1	TERMINAL BLOCK, 24 PT, 5ESDV-24, 24-1	2460-95
05	1	HEAT SINK, THERMALLOY #60738	7195-05
06	1	6-32 X 0.3125 LG SCREW, NUT & LOCK WASHER	-----

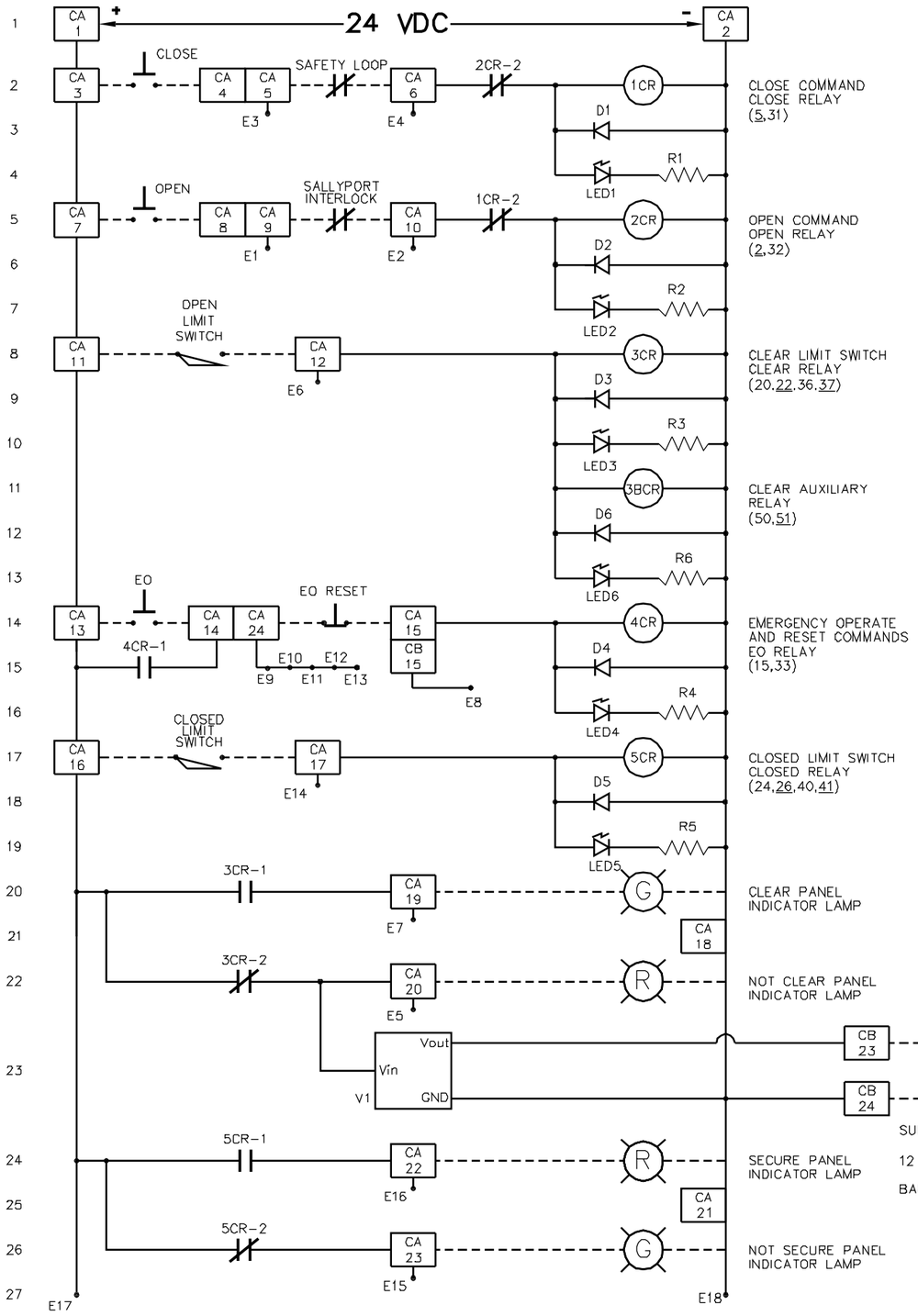

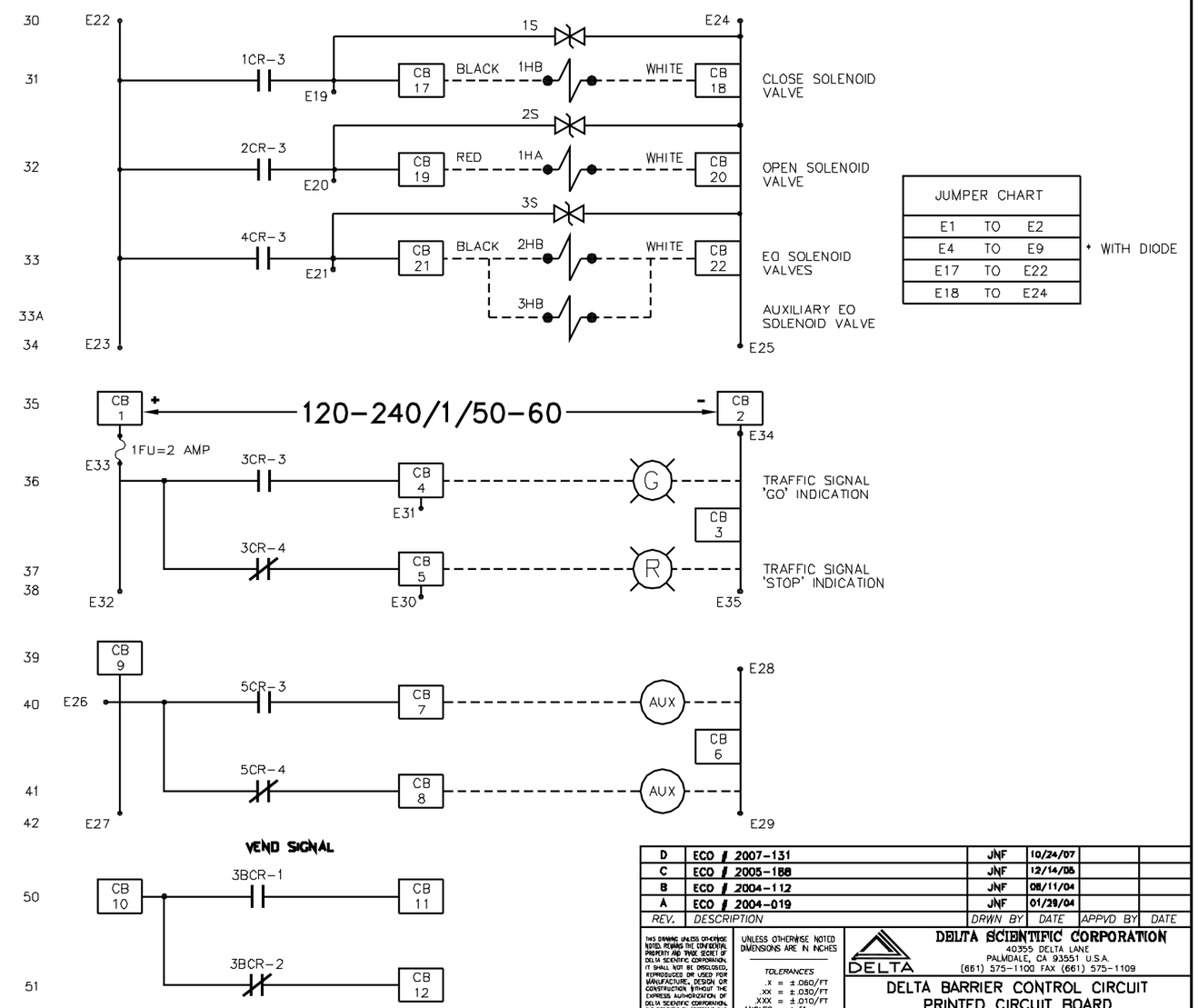

REV.	DESCRIPTION	DRWN BY	DATE	APPVD BY	DATE
D	ECO # 2007-131	JNF	10/24/07		
C	ECO # 2005-188	JNF	12/14/05		
B	ECO # 2004-112	JNF	08/11/04		
A	ECO # 2004-019	JNF	01/28/04		

THIS DRAWING UNLESS OTHERWISE NOTED, REMAINS THE CONFIDENTIAL PROPERTY AND TRADE SECRET OF DELTA SCIENTIFIC CORPORATION. IT SHALL NOT BE DISCLOSED, REPRODUCED OR USED FOR MANUFACTURE, DESIGN OR CONSTRUCTION WITHOUT THE EXPRESS AUTHORIZATION OF DELTA SCIENTIFIC CORPORATION. THE RECIPIENT BY ACCEPTING THIS DRAWING, ASSUMES CUSTODY THEREOF AND UNDER THE ABOVE TERMS AGREES NOT TO ALLOW USE OF BY UNAUTHORIZED PERSONS.

© 2007
ALL RIGHTS RESERVED

UNLESS OTHERWISE NOTED DIMENSIONS ARE IN INCHES

TOLERANCES
.X = ±.060/FT
.XX = ±.030/FT
.XXX = ±.010/FT
ANGLES = ±.5°

SURFACE FINISH
125

REMOVE ALL BURRS & BREAK SHARP EDGES .02 MAX

DELTA SCIENTIFIC CORPORATION
40355 DELTA LANE
PALMDALE, CA 93551 U.S.A.
(661) 575-1100 FAX (661) 575-1109

DELTA BARRIER CONTROL CIRCUIT PRINTED CIRCUIT BOARD

DRWN BY	DATE	DRAWING NO.	REV.
J.FRIEND	11/18/98	90605	D
CHKD BY	DATE		
APPVD BY	DATE	SCALE: N.T.S.	SHEET 1 OF 1

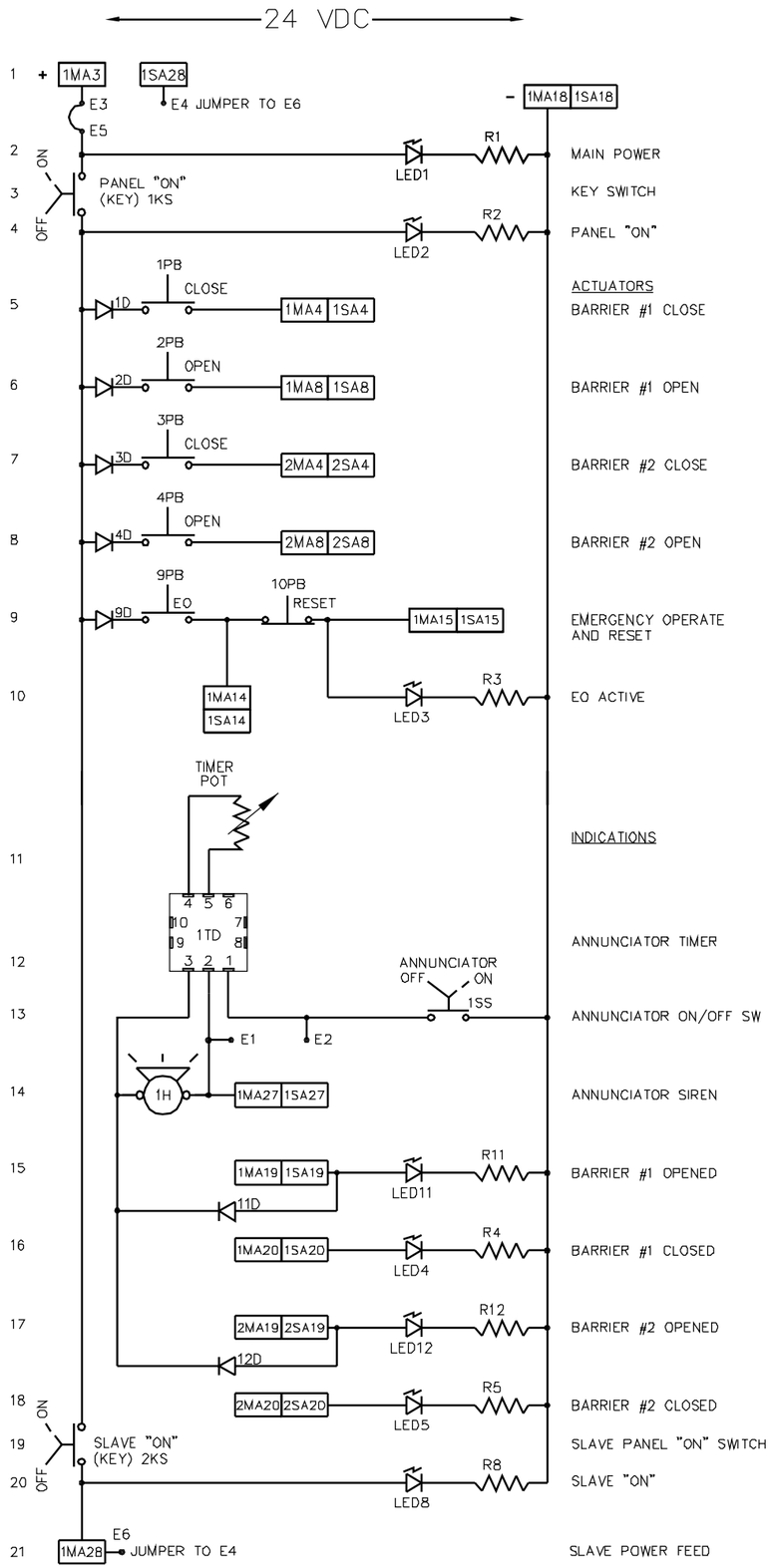

ITEM	REQ'D	DESCRIPTION	STK. NO.
1KS–2KS	2	KEY SWITCH,	2463–01
1SS	1	SELECTOR SWITCH,	2463–02A
1PB–4PB	4	PUSH BUTTON, N.O.,	2463–06
9PB	1	HOODED TOGGLE,	2463–03A
10PB	1	PUSH BUTTON, N.C.,	2463–07
1LT–8LT	6	PILOT LIGHT, RED, LED, 24 VDC,	2463–16
11LT–12LT	2	PILOT LIGHT, GREEN, LED, 24 VDC,	2463–17
1H	1	ANNUNCIATOR SIREN,	2463–63
1TD	1	RELAY, ON–DELAY, 24 VDC,	2534–69
POT	1	TRIM POT, 1K OHM,	2534–68
1D–12D	7	DIODE, IN5404	IN5404
1R–12R	8	RESISTOR, 1.2K OHM, 0.25 WATT,	----
01	1	BOARD, PCB,	90734–X
02	1	PANEL FACE, 6.97" X 19" X 0.125" (90732–2)	1893–XX
03	1	ENCLOSURE, 6.75" X 16.75" X 1.5"	2462–58
04	2	TERMINAL STRIP, 28 POINT, FEMALE	2460–02
05	2	TERMINAL STRIP, 28 POINT, MALE	2460–03

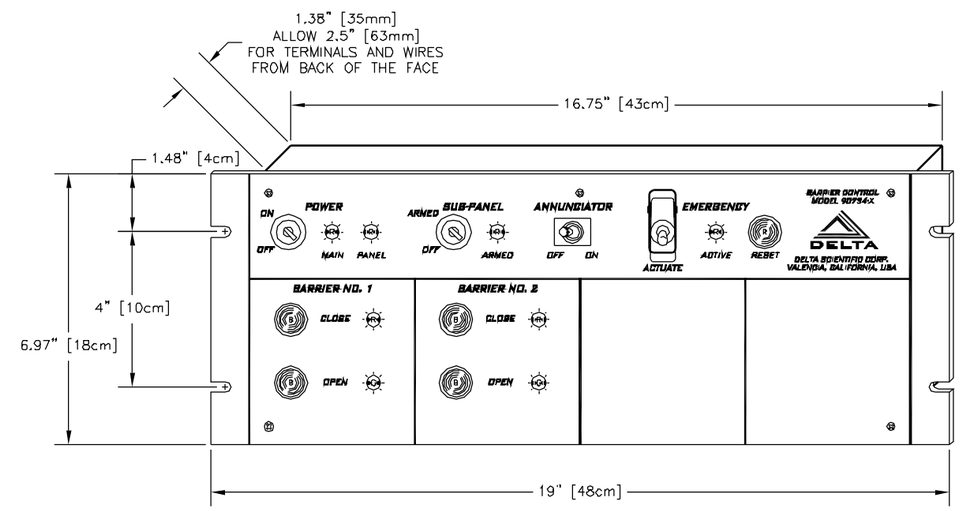

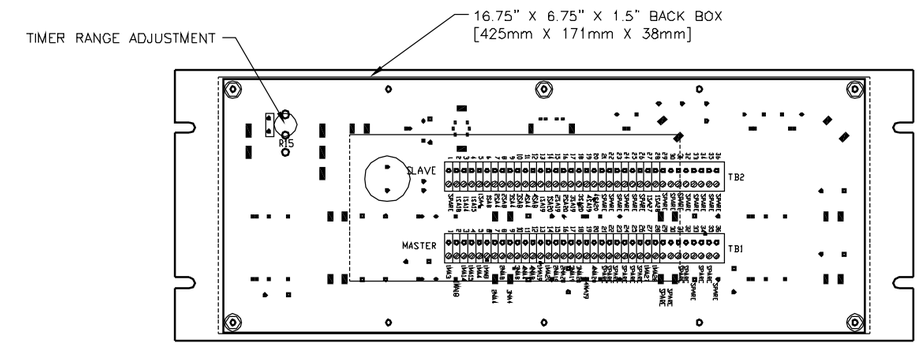

PANEL BACK – WIRING CONNECTIONS

LEGEND

1TD — DEVICE WITH DEVICE'S PIN CALLOUTS

2MA28 — TERMINAL LOCATION

THIS DRAWING UNLESS OTHERWISE NOTED, REMAINS THE CONFIDENTIAL PROPERTY AND TRADE SECRET OF DELTA SCIENTIFIC CORPORATION. IT SHALL NOT BE DISCLOSED, REPRODUCED OR USED FOR MANUFACTURE, DESIGN OR CONSTRUCTION, WITHOUT THE EXPRESS AUTHORIZATION OF DELTA SCIENTIFIC CORPORATION. THE RECIPIENT BY ACCEPTING THIS DRAWING, ASSUMES CUSTODY THEREOF AND UNDER THE ABOVE TERMS AGREES NOT TO ALLOW USE OF BY UNAUTHORIZED PERSONS.

© 2000 ALL RIGHTS RESERVED

UNLESS OTHERWISE NOTED DIMENSIONS ARE IN INCHES

TOLERANCES
.X = ±.060/FT
.XX = ±.030/FT
.XXX = ±.010/FT
ANGLES = ±.5°

SURFACE FINISH 125

REMOVE ALL BURRS & BREAK SHARP EDGES .02 MAX

DELTA SCIENTIFIC CORPORATION
40355 DELTA LANE
PALMDALE, CA 93551 U.S.A.
(661) 575–1100 FAX (661) 575–1109

B1041 MASTER CONTROL PANEL W/INDICATING LIGHTS, EFO, ANNUNCIATOR AND OVERRIDE, TWO BARRIER

DRAWN BY	DATE	DRAWING NO.	REV.
J.FRIEND	04/16/03	90732–2	–
CHKD BY	DATE		
APPVD BY	DATE	SCALE: 1:2 (D SIZE)	SHEET: SHEET 1 OF 1

ITEM	REQ'D	DESCRIPTION	STK. NO.
1KS	1	KEY SWITCH,	2463-01
1PB-4PB	4	PUSH BUTTON, N.O.,	2463-06
9PB	1	LARGE PUSH BUTTON,	2463-04A
1LT-5LT	5	PILOT LIGHT, RED, LED, 24 VDC,	2463-16
11LT-12LT	2	PILOT LIGHT, GREEN, LED, 24 VDC,	2463-17
1H	1	ANNUNCIATOR SIREN,	2463-63
1D-12D	7	DIODE, IN5404	IN5404
1R-12R	7	RESISTOR, 1.2K OHM, 0.25 WATT,	----
01	1	BOARD, PCB,	90734-X
02	1	PANEL FACE, 6.97" X 19" X 0.125" (90833-3)	1893-XX
03	1	ENCLOSURE, 6.75" X 16.75" X 1.5"	2462-58
04	1	TERMINAL STRIP, 28 POINT, FEMALE	2460-02
05	1	TERMINAL STRIP, 28 POINT, MALE	2460-03

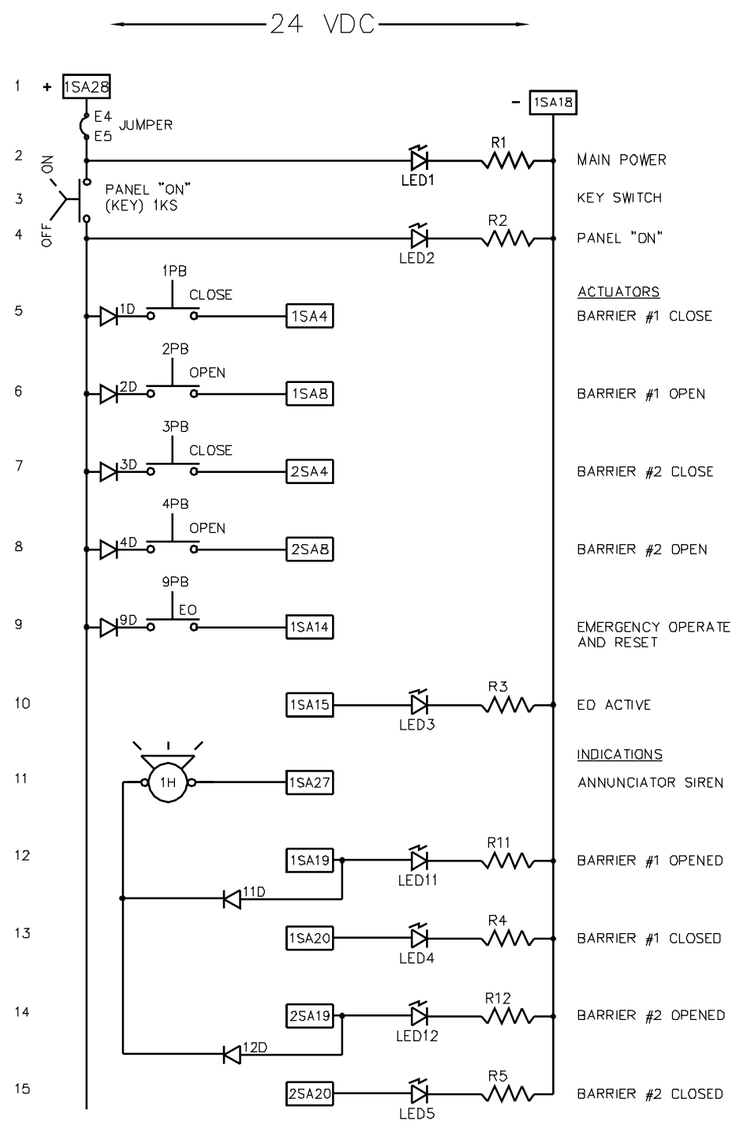

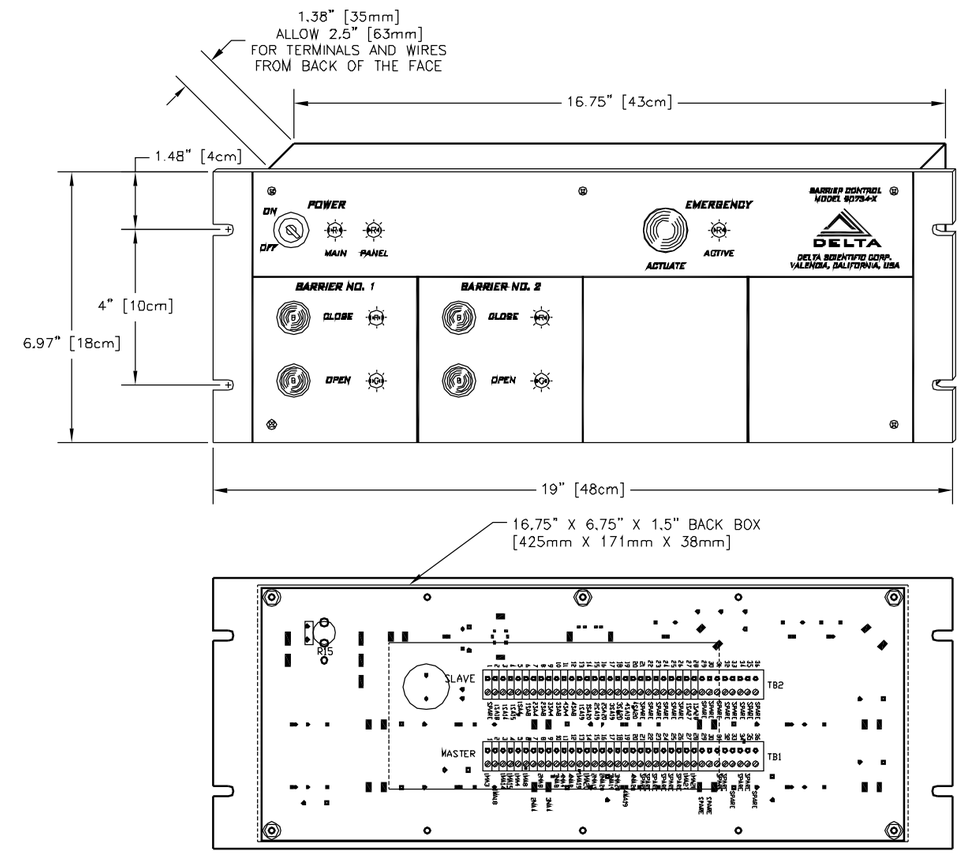

PANEL BACK – WIRING CONNECTIONS

LEGEND

1TD (2, 7) — DEVICE WITH DEVICE'S PIN CALLOUTS

2MA28 — TERMINAL LOCATION

THIS DRAWING UNLESS OTHERWISE NOTED REMAINS THE CONFIDENTIAL PROPERTY AND TRADE SECRET OF DELTA SCIENTIFIC CORPORATION. IT SHALL NOT BE DISCLOSED, REPRODUCED OR USED FOR MANUFACTURE, DESIGN OR CONSTRUCTION WITHOUT THE EXPRESS AUTHORIZATION OF DELTA SCIENTIFIC CORPORATION. THE RECIPIENT BY ACCEPTING THIS DRAWING, ASSUMES CUSTODY THEREOF AND UNDER THE ABOVE TERMS AGREES NOT TO ALLOW USE OF BY UNAUTHORIZED PERSONS.

© 2000
ALL RIGHTS RESERVED

UNLESS OTHERWISE NOTED DIMENSIONS ARE IN INCHES

TOLERANCES
.X = ±.050/FT
.XX = ±.030/FT
.XXX = ±.010/FT
ANGLES = ±.5°

SURFACE FINISH
125

REMOVE ALL BURRS & BREAK SHARP EDGES .02 MAX

DELTA SCIENTIFIC CORPORATION
40355 DELTA LANE
PALMDALE, CA 93551 U.S.A.
(661) 575-1100 FAX (661) 575-1109

B1091 SLAVE CONTROL PANEL W/INDICATING LIGHTS, EFO, AND ANNUNCIATOR, TWO BARRIER

DRAWN BY	DATE	DRAWING NO.	REV.
J.FRIEND	04/16/03	90832-2	–
CHKD BY	DATE		
APPVD BY	DATE	SCALE: 1:2 (D SIZE)	SHEET: SHEET 1 OF 1

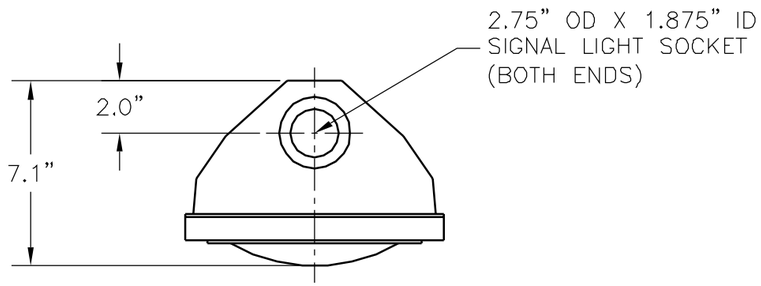

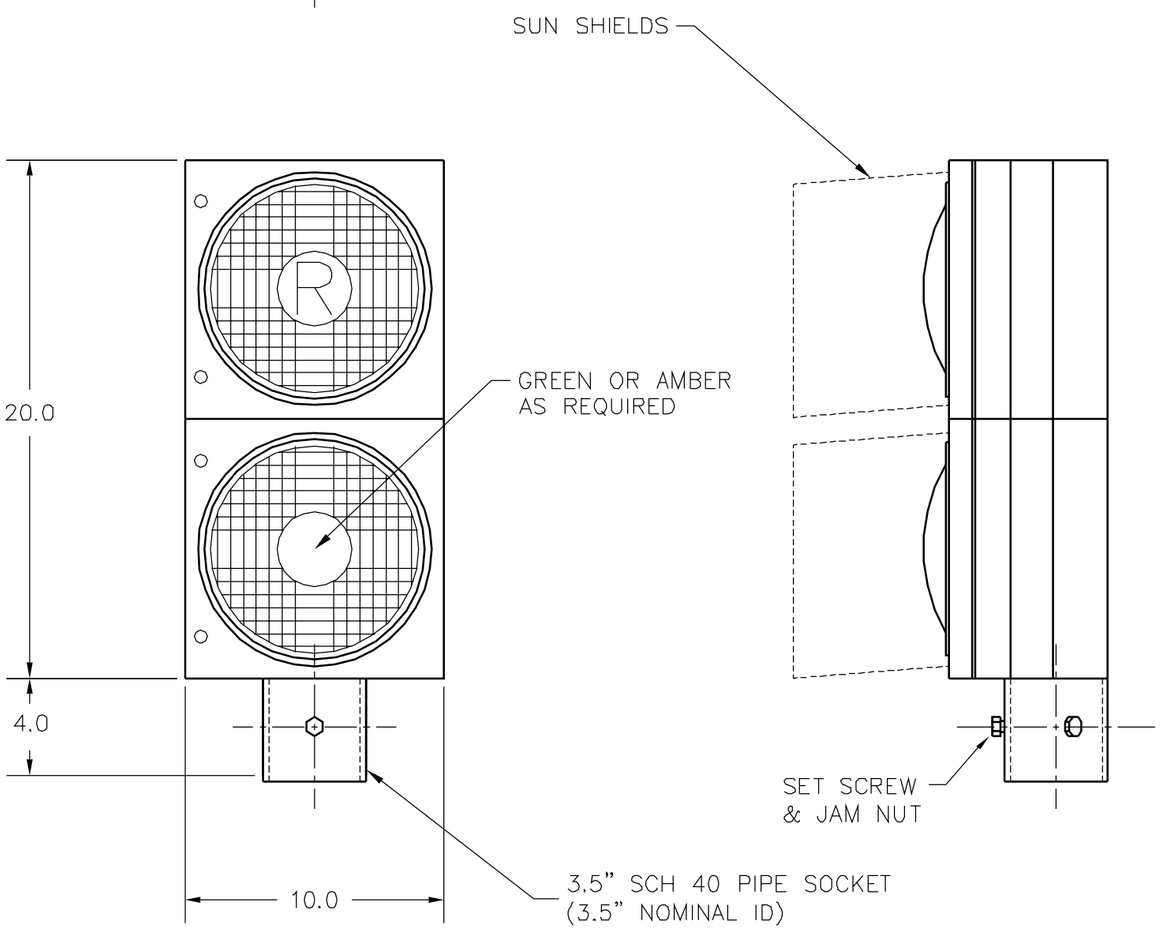

MODEL MPL-10LEDXX LIGHT

FLASHER DIAGRAMS

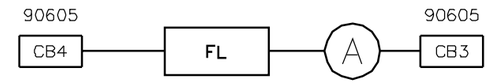

DIAGRAM 'A'

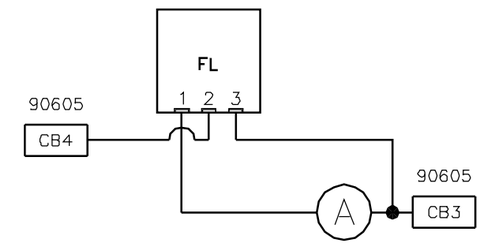

DIAGRAM 'B'

TERMINAL DIAGRAM

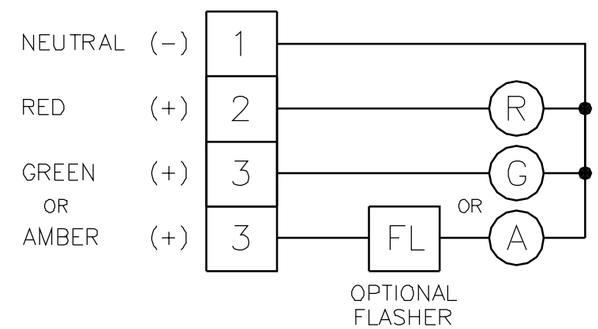

MODEL NO.	LED LAMP COLORS	VOLTAGE	HERTZ	DIAGRAM	FL STK.NO.
MPL-10LED230RFA	RED/FLASHING AMBER	200-250	50/60	B	2534-113
MPL-10LED120RFA	RED/FLASHING AMBER	100-125	50/60	A	2534-56
MPL-10LED230RA	RED/AMBER	200-250	50/60	–	–
MPL-10LED120RA	RED/AMBER	100-125	50/60	–	–
MPL-10LED230	RED/GREEN	200-250	50/60	–	–
MPL-10LED120	RED/GREEN	100-125	50/60	–	–

THIS DRAWING UNLESS OTHERWISE NOTED REMAINS THE CONFIDENTIAL PROPERTY AND TRADE SECRET OF DELTA SCIENTIFIC CORPORATION. IT SHALL NOT BE DISCLOSED, REPRODUCED OR USED FOR MANUFACTURE, DESIGN OR CONSTRUCTION WITHOUT THE EXPRESS AUTHORIZATION OF DELTA SCIENTIFIC CORPORATION. THE RECIPIENT BY ACCEPTING THIS DRAWING, ASSUMES CUSTODY THEREOF AND UNDER THE ABOVE TERMS AGREES NOT TO ALLOW USE OF BY UNAUTHORIZED PERSONS.

© 2007
ALL RIGHTS RESERVED

UNLESS OTHERWISE NOTED DIMENSIONS ARE IN INCHES

TOLERANCES
.X = ±.060/FT
.XX = ±.030/FT
.XXX = ±.010/FT
ANGLES = ±.5°

SURFACE FINISH
125

REMOVE ALL BURRS & BREAK SHARP EDGES .02 MAX

DELTA SCIENTIFIC CORPORATION
40355 DELTA LANE
PALMDALE, CA 93551 U.S.A.
(661) 575-1100 FAX (661) 575-1109

MODEL MPL-10LEDXX STOP/GO LIGHTS
GENERAL ARRANGEMENT

DRAWN BY	DATE	DRAWING NO.	REV.
J.FRIEND	09/10/07	MPL-10LEDXX	–
CHKD BY	DATE		
APPVD BY	DATE	SCALE: 1:3 (D SIZE)	SHEET 1 OF 1

ALL POSTS FURNISHED WITH STANDARD WHITE PAINTED FINISH (MPL-20W)
RED (MPL-20R) AND YELLOW (MPL-20Y) AVAILABLE AS AN OPTION

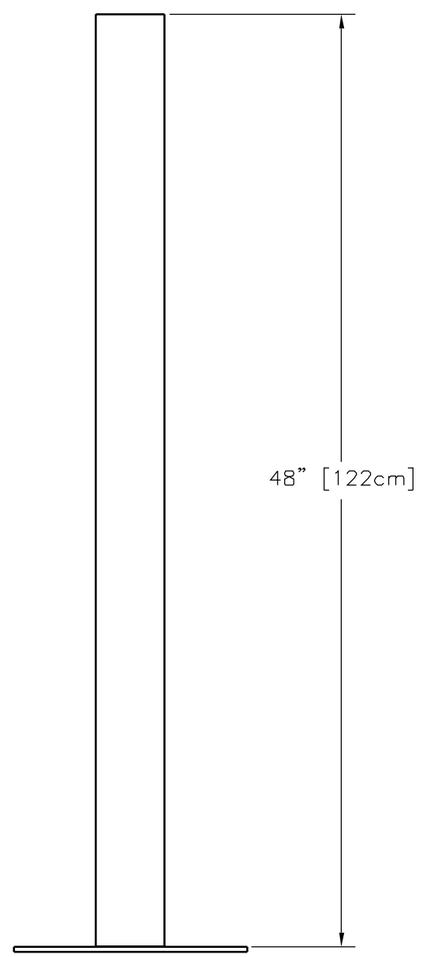

MODEL MPL-20

48" FLANGED POST

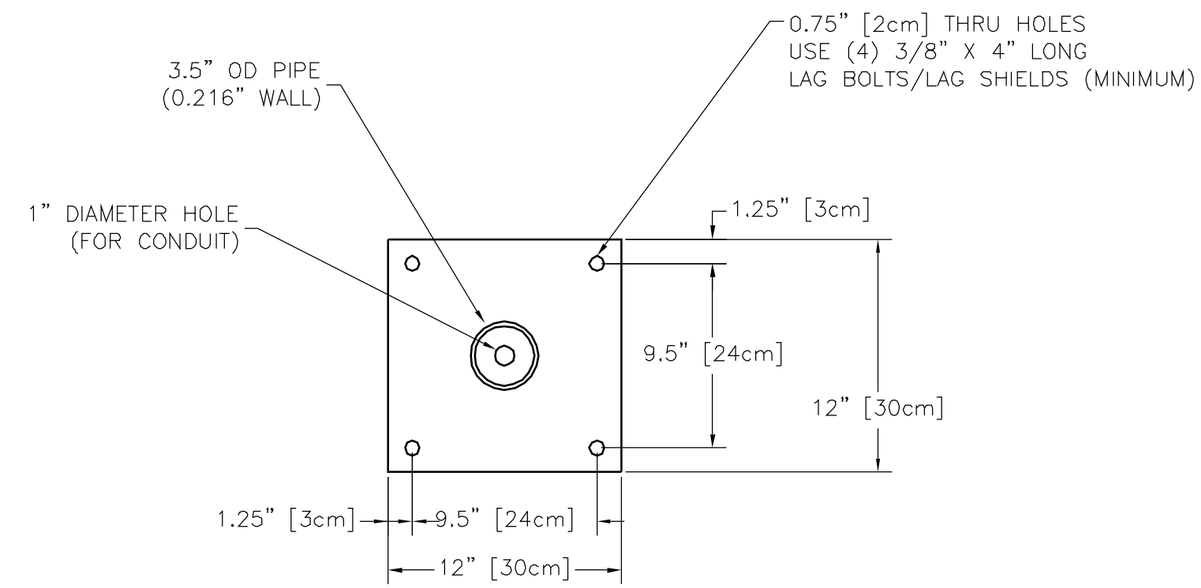

BASE FLANGE (TYPICAL)

REV.	DESCRIPTION	DRWN BY	DATE	APPVD BY	DATE
A	ECO #2004-110	JNF	06/10/04		

THIS DRAWING UNLESS OTHERWISE NOTED, REMAINS THE CONFIDENTIAL PROPERTY AND TRADE SECRET OF DELTA SCIENTIFIC CORPORATION. IT SHALL NOT BE DISCLOSED, REPRODUCED OR USED FOR MANUFACTURE, DESIGN OR CONSTRUCTION WITHOUT THE EXPRESS AUTHORIZATION OF DELTA SCIENTIFIC CORPORATION. THE RECIPIENT BY ACCEPTING THIS DRAWING, ASSUMES CUSTODY THEREOF AND UNDER THE ABOVE TERMS AGREES NOT TO ALLOW USE OF BY UNAUTHORIZED PERSONS.

© 1998
ALL RIGHTS RESERVED

UNLESS OTHERWISE NOTED DIMENSIONS ARE IN INCHES

TOLERANCES
.X = ±.060/FT
.XX = ±.030/FT
.XXX = ±.010/FT
ANGLES = ±.5°

SURFACE FINISH
125

REMOVE ALL BURRS & BREAK SHARP EDGES .02 MAX

DELTA SCIENTIFIC CORPORATION
24901 WEST AVE. STANFORD
VALENCIA, CA. 91355 U.S.A.
(805) 257-1800 FAX (805) 257-0617

FLANGED MOUNTING POST
48 INCH [122 CM] HIGH

DRWN BY	DATE	DRAWING NO.	REV.
J.FRIEND	07/07/98	MPL-20	A
CHKD BY	DATE		
APPVD BY	DATE	SCALE: 1:4 (D SIZE)	SHEET: SHEET 1 OF 1

ITEM	REQ'D	DESCRIPTION/MATERIAL	CUT or SHEAR	CUT LENGTH or SHEAR SIZE	ENDCUT	WT/ft or WT/sq'	WT EA	TOT WT	REF NO
1	1	MID TUBE	PART		90/90		9.6	9.6	10993
2	2	STEEL, 3" SCH 40 PIPE (3.5" OD)	CUT	4.50	90/90	7.58	2.8	5.7	
3	1	STEEL, 3.5" SCH 40 PIPE (4" OD)	CUT	4.00	90/90	9.11	3.0	3.0	
							TOTAL WEIGHT:	18.3	

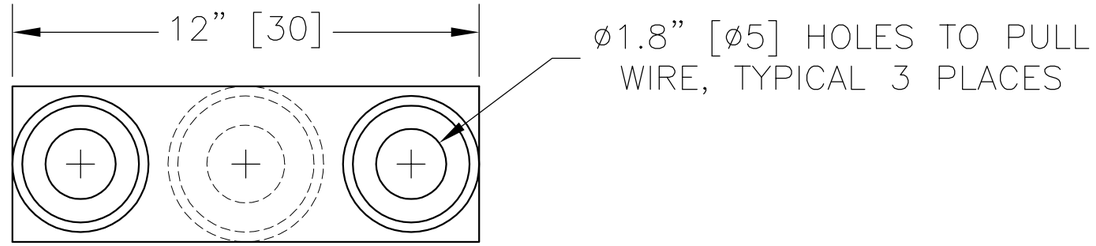

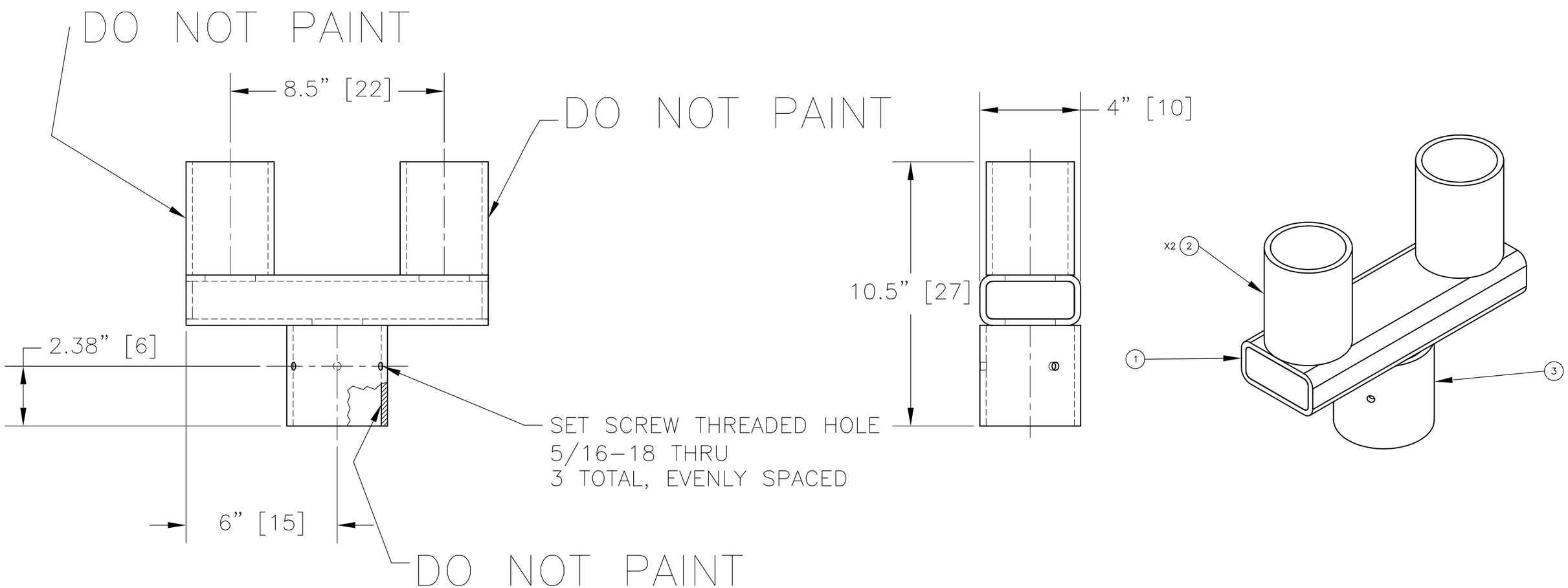

MODEL MPL-34 BACK TO BACK BRACKET

(1729-00)

NOTES:

ZINC PLATE PRIOR TO PAINT.
DO NOT PAINT WHERE INDICATED.

REV.	DESCRIPTION	DRWN BY	DATE	APPVD BY	DATE
B	ECO #2010-163	JTB	10/25/10		
A	SEE ECO 2009-227	L.G.	12/10/09	JNF	12/10/09

THIS DRAWING UNLESS OTHERWISE NOTED, REMAINS THE CONFIDENTIAL PROPERTY AND TRADE SECRET OF DELTA SCIENTIFIC CORPORATION. IT SHALL NOT BE DISCLOSED, REPRODUCED OR USED FOR MANUFACTURE, DESIGN OR CONSTRUCTION WITHOUT THE EXPRESS AUTHORIZATION OF DELTA SCIENTIFIC CORPORATION. THE RECIPIENT BY ACCEPTING THIS DRAWING, ASSUMES CUSTODY THEREOF AND UNDER THE ABOVE TERMS AGREES NOT TO ALLOW USE OF BY UNAUTHORIZED PERSONS.

© 1995
ALL RIGHTS RESERVED

UNLESS OTHERWISE NOTED DIMENSIONS ARE IN INCHES

TOLERANCES
.X = ±.060/FT
.XX = ±.030/FT
.XXX = ±.010/FT
ANGLES = ±.5°

SURFACE FINISH
125

REMOVE ALL BURRS & BREAK SHARP EDGES .02 MAX

DELTA SCIENTIFIC CORPORATION
40355 DELTA LANE
PALMDALE, CA 93551 U.S.A.
(661) 575-1100 FAX (661) 575-1109

MODEL MPL-34 BACK TO BACK BRACKET
GENERAL ARRANGEMENT

DRWN BY	DATE	DRAWING NO.	REV.
J.FRIEND	01/20/99	MPL-34	B
CHKD BY	DATE		
APPVD BY	DATE	SCALE: 1:2 (D SIZE)	SHEET: SHEET 1 OF 1

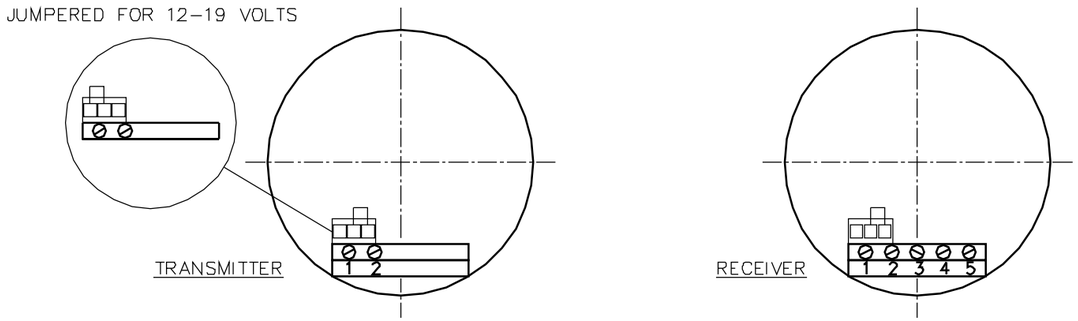

A SYSTEM CONSISTING OF A PULSED ENERGY TRANSMITTER AND A MATCHING RECEIVER TO DETECT THE PRESENCE OF A BODY IN ITS PATH. SYSTEM IGNORES OR IS INSENSITIVE TO TRANSIENT INTERFERENCE SIGNALS AND/OR OTHER CONTINUOUS SOURCES OF I.R.

RANGE -- 100 FEET MAX. (THIS DIMENSION HAS BEEN DERATED FOR RAIN AND FOG).
INPUT VOLTAGE – 12 OR 24 VAC/VDC
OUTPUT RELAY SPDT – RATING 1 AMPS @ 30 VAC/VDC
FLUSH MOUNTING WEATHER PROOF.

NOTE: INDICATING LED AND ALIGNMENT SCREWS ARE OBSCURED BY FRONT LENS UNDER NORMAL CONDITIONS. LENS CAN BE REMOVED FOR SET UP AND ADJUSTMENT BY OBSERVING THE MAGNITUDE OF INTERNAL SIGNAL.

CONNECTIONS

PIN NO.
1+, 2– } 12–24 VAC/DC (SHOWN JUMPERED FOR 20–24 VOLTS)
3, 4, 5 } NOT USED

PIN NO.
1+, 2– } 12–24 VAC/DC
3 RELAY – N/O
4 RELAY – N/C
5 RELAY – COMMON

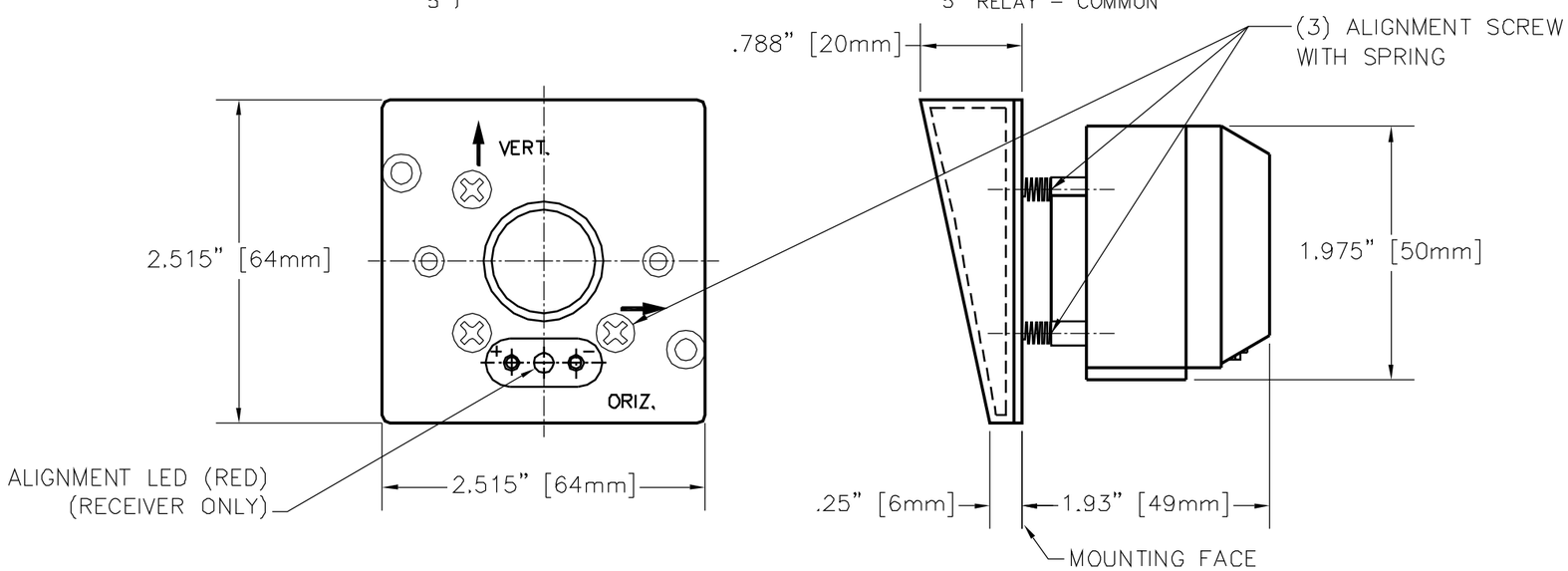

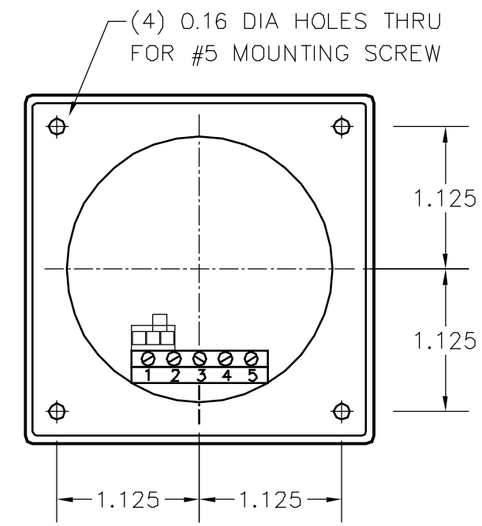

TRANSMITTER & RECEIVER OUTLINE

THIS DRAWING UNLESS OTHERWISE NOTED, REMAINS THE CONFIDENTIAL PROPERTY AND TRADE SECRET OF DELTA SCIENTIFIC CORPORATION. IT SHALL NOT BE DISCLOSED, REPRODUCED OR USED FOR MANUFACTURE, DESIGN OR CONSTRUCTION WITHOUT THE EXPRESS AUTHORIZATION OF DELTA SCIENTIFIC CORPORATION. THE RECIPIENT BY ACCEPTING THIS DRAWING, ASSUMES CUSTODY THEREOF AND UNDER THE ABOVE TERMS AGREES NOT TO ALLOW USE OF BY UNAUTHORIZED PERSONS.

© 2006
ALL RIGHTS RESERVED

UNLESS OTHERWISE NOTED DIMENSIONS ARE IN INCHES

TOLERANCES
.X = ±.060/FT
.XX = ±.030/FT
.XXX = ±.010/FT
ANGLES = ±.5°

SURFACE FINISH
125

REMOVE ALL BURRS & BREAK SHARP EDGES .02 MAX

DELTA SCIENTIFIC CORPORATION
40355 DELTA LANE
PALMDALE, CA 93551
(661) 575–1100 FAX (661) 575–1109

MODEL D–168 Mark I
INFRARED BEAM SENSOR SYSTEM

DRWN BY	DATE	DRAWING NO.	REV.
JNF	03/13/06	D–168.1	–
CHKD BY	DATE		
APPVD BY	DATE	SCALE: 1.25:1 (B SIZE)	SHEET SHEET 1 OF 1

Infrared Photocell Synchronized
Instruction Manual

Introduction

The photoelectric cells D-168 Mark 1 is a safety device suitable for automatic access. Each pair consists of a modulated infrared ray transmitter (TX) and a receiver (RX) with a dual relay output contact. Both cells have an optical system (lens) to concentrate the ray, an electronic circuit as immunity to sunlight and synchronizing system for installing two pairs of photocells. The container is in a glass reinforced plastic material offering high resistance mechanical damage and weathering.

The D-168 Mark 1 is wall embeddable and operates at 12 to 24 VAC/VDC. Two outer cases are provided to enhance the mechanical installation.

Installation

The receiver and transmitter must be located one in front of the other and fixed so as to be as accurately aligned as possible. In the case of errors or in extreme cases, the inside bodies of the photocells can be slanted vertically or horizontally +/- 15°.

If two parallel pairs of photocells are used, the rays of one pair can interfere with the other pair causing a malfunction. In case of alternating current it is advised to set both transmitters so they are synchronized. Synchronizing requires the pairs of photocells to function on different phases. Therefore it is important to pay attention to the wiring supply. The phases must be the same in the first pair, but inverted in the second pair (Figure 1). Cut jumper to synchronize (Figure 4).

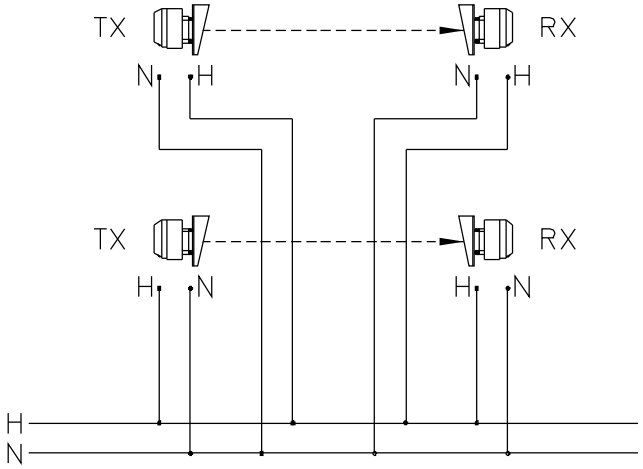

(Figure 1)

Copyright 2006 Delta Scientific Corporation
All Rights Reserved

Avoid placing both receivers on one side and both transmitters on the other; alternate receivers with transmitters (Figure 2).

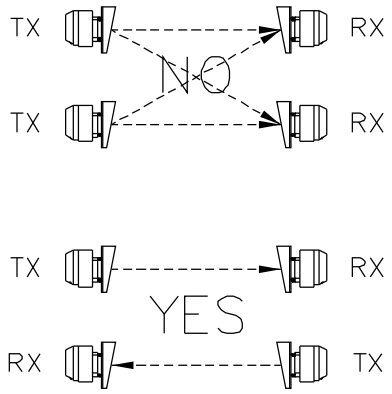

(Figure 2)

The sensors should be installed by qualified personnel in accordance with all applicable codes and standards established by the laws in force in the country of installation. Failure to comply with the instructions could prejudice correct functioning of the equipment, creating a hazard source for people, consequently THE MANUFACTURER declines all responsibility for any malfunction and/or damage as a result of such failure.

A) Reference Figure 3, insert the covers (1) and line up the TX and RX as much as possible. They can be fastened as follows:

- using two screws in the holes on the bottom (2)
- using foamed adhesive material or concrete,
- using four screws (3) for attachment to studs or sheet metal.

B) Make the electrical connections according to the drawings. To facilitate installation and centering, it is recommended to keep the cables between the outside cover and the photocell as short as possible.

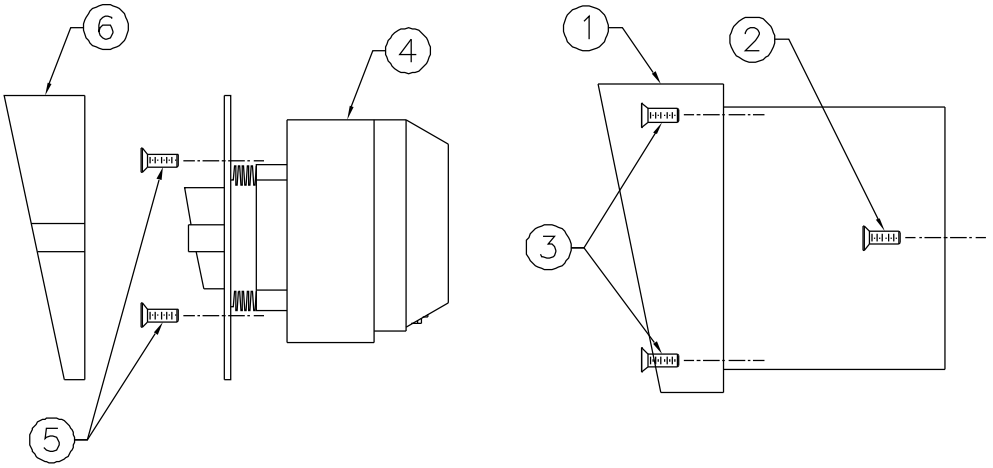

(Figure 3)

Copyright 2006 Delta Scientific Corporation
All Rights Reserved

C) Fasten the photocell (4) using the supplied screws (5).

D) Test the photocell and center it. After adjustment, install the lens covers (6).

Power Supply and Switch Outputs

The photocells are powered with 24 VAC or VDC. For voltages lower than 19 V plug in the jumper provided (Figure 4).

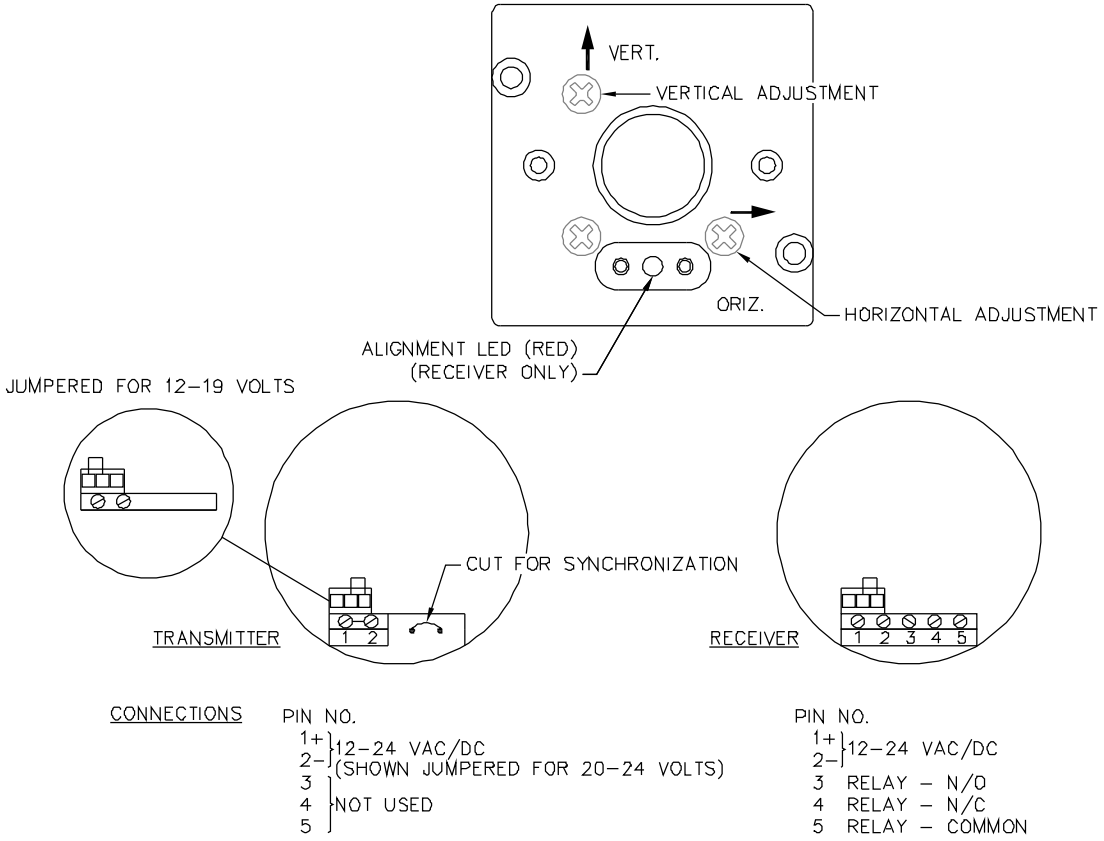

(Figure 4)

Centering and Testing

Check that the voltage is the same as required for the photocells and that the power is on. At this point, if the alignment of the pair is reasonably centered, the receiver should switch the output. If this does not happen proceed with centering.

To facilitate alignment, the inside bodies of both the transmitter and receiver are mounted on springs and with the aid of the two adjustment screws they can be swiveled horizontally and/or vertically (Figure 4). The receiver is equipped with a red LED that switches off when the photocell is centered. The photocells should be centered as close as possible, even if they initially appear aligned.

Copyright 2006 Delta Scientific Corporation
All Rights Reserved

Check functioning by passing in front of the infrared ray several times (the red LED on the receiver should turn on and the relay should switch). Repeat this also after the covers of the receiver and transmitter have been installed.

The centering filter (Figure 5) is used for an additional test and to be sure that even in the worst conditions, i.e. fog or rain, everything works properly.

The test is quick and simple: place the film on one of the fronts and check that the photocell is working properly. If it does not it means the photocells are at the limit of its working range or the alignment is not accurate. ***Note:*** Remember to remove the plastic film when you have finished testing.

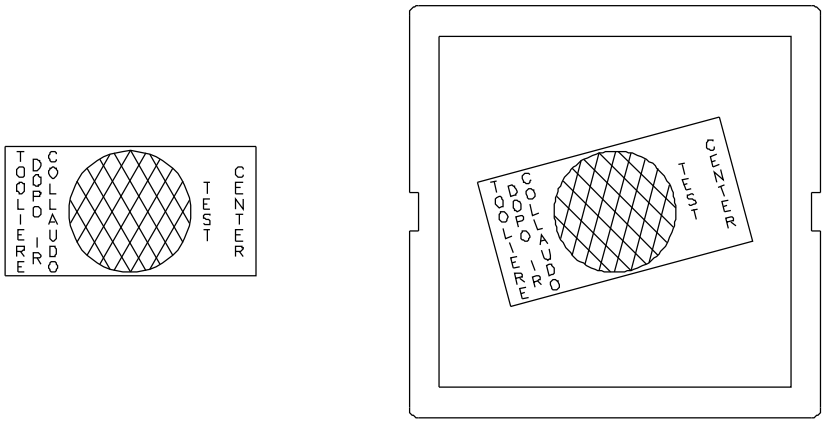

(Figure 5)

Technical Data

Type	Modulated Infrared		
Range	200 feet [60 meters] (Note 1)		
Power Supply	12 V - 24 V VDC or VAC +/- 20%		
Power Consumption TX + RX	24 V	105mA	(60mA + 45mA)
	12 V	155mA	(85mA + 70mA)
Operating Temperature	-4°F to 140°F [-20°C to 60°C]		
Contact Rating	1 Amp at 30 VDC		

(Note 1) Due to rain, fog, dust or misalignment, the range may be reduced by 50 to 70 percent.

EC Declaration of Conformity

The producer, Telecoma S.r.l, declares that the product FT501 (Delta Model D-168 Mark 1) used as photocells for gate openers comply with essential requirements of the **Directives 89/336 (EMC)** and **73/23 (LVD)** and their amendments, when used for their intended purpose. The above mentioned product is meant as an integral part of one of the installation configurations as shown in our catalogs.

Place and Date: **Conegliano, 04/06/2001**

General Manager

Copyright 2006 Delta Scientific Corporation
All Rights Reserved

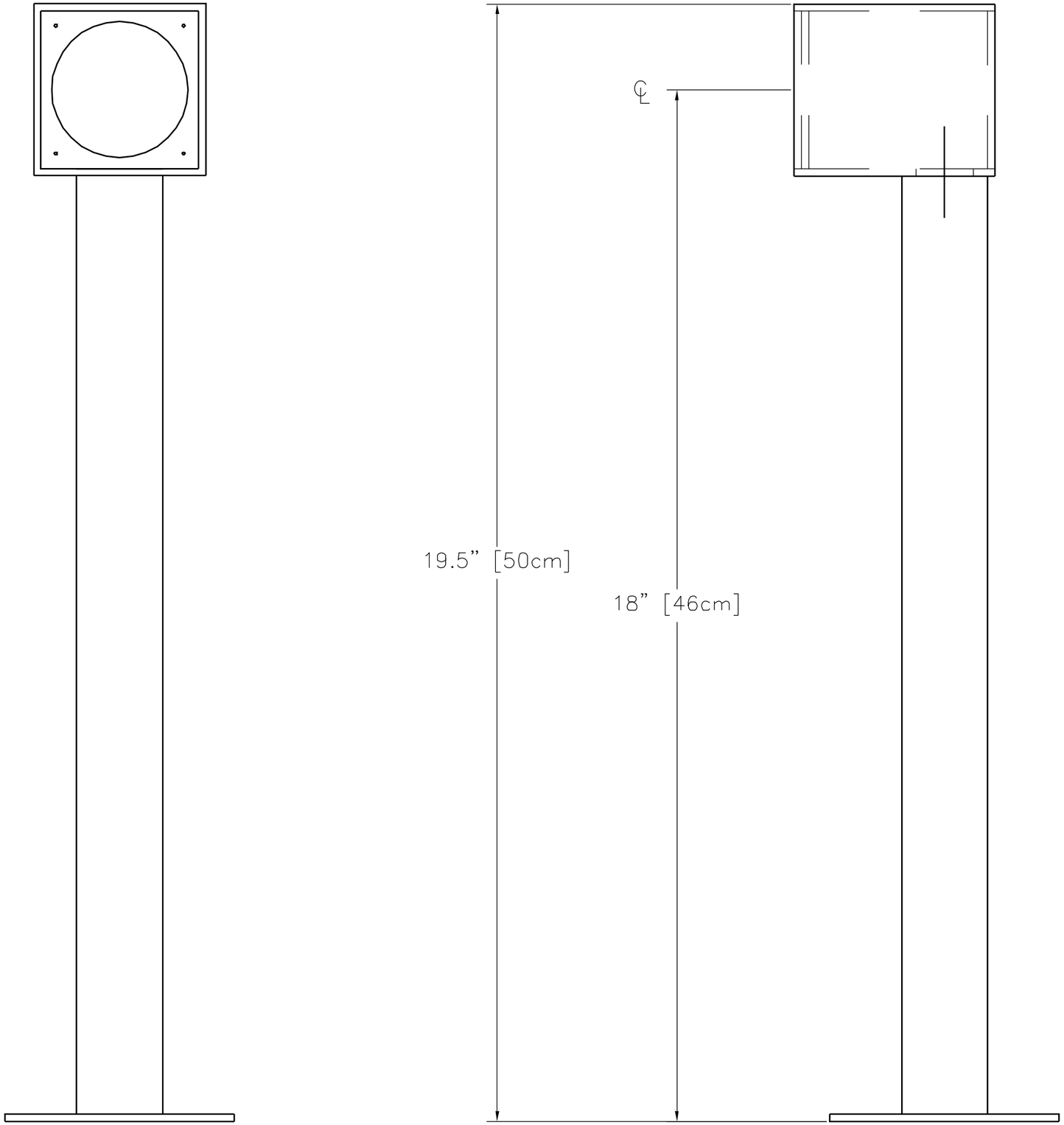

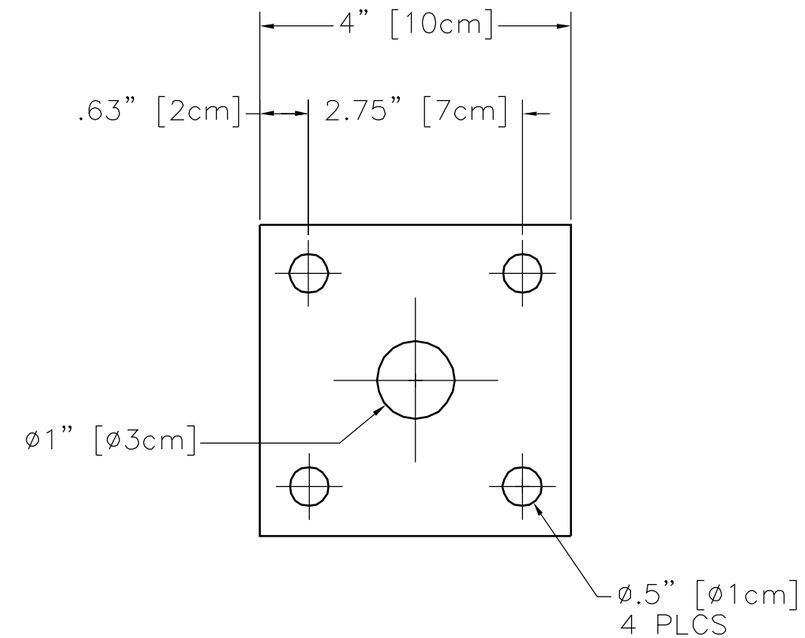

1. FINISH: ZINC PLATED

NOTES: UNLESS OTHERWISE SPECIFIED

THIS DRAWING UNLESS OTHERWISE NOTED REMAINS THE CONFIDENTIAL PROPERTY AND TRADE SECRET OF DELTA SCIENTIFIC CORPORATION. IT SHALL NOT BE DISCLOSED, REPRODUCED OR USED FOR MANUFACTURE, DESIGN OR CONSTRUCTION WITHOUT THE EXPRESS AUTHORIZATION OF DELTA SCIENTIFIC CORPORATION. THE RECIPIENT BY ACCEPTING THIS DRAWING, ASSUMES CUSTODY THEREOF AND UNDER THE ABOVE TERMS AGREES NOT TO ALLOW USE OF BY UNAUTHORIZED PERSONS.

© 2000
ALL RIGHTS RESERVED

UNLESS OTHERWISE NOTED DIMENSIONS ARE IN INCHES

TOLERANCES
.X = ±.060/FT
.XX = ±.030/FT
.XXX = ±.010/FT
ANGLES = ±.5°

SURFACE FINISH
125

REMOVE ALL BURRS & BREAK SHARP EDGES .02 MAX

DELTA SCIENTIFIC CORPORATION
40355 DELTA LANE
PALMDALE, CA 93551 U.S.A.
(661) 575-1100 FAX (661) 575-1109

MODEL D-168-3 I-R SENSOR STAND
18" STANCHION HEIGHT

DRAWN BY J.FRIEND	DATE 04/27/99	DRAWING NO. D-168-3	REV. –
CHKD BY	DATE		
APPVD BY	DATE	SCALE: 1:1 (D SIZE)	SHEET SHEET 1 OF 1