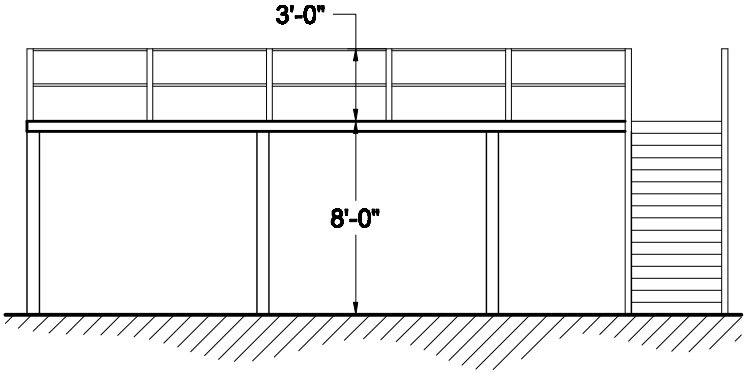

FRONT ELEVATION (A)

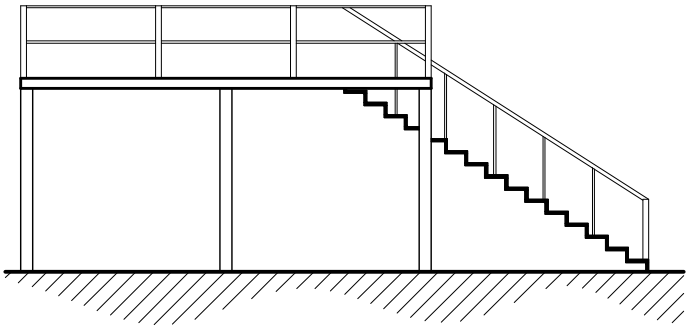

END ELEVATION (B)

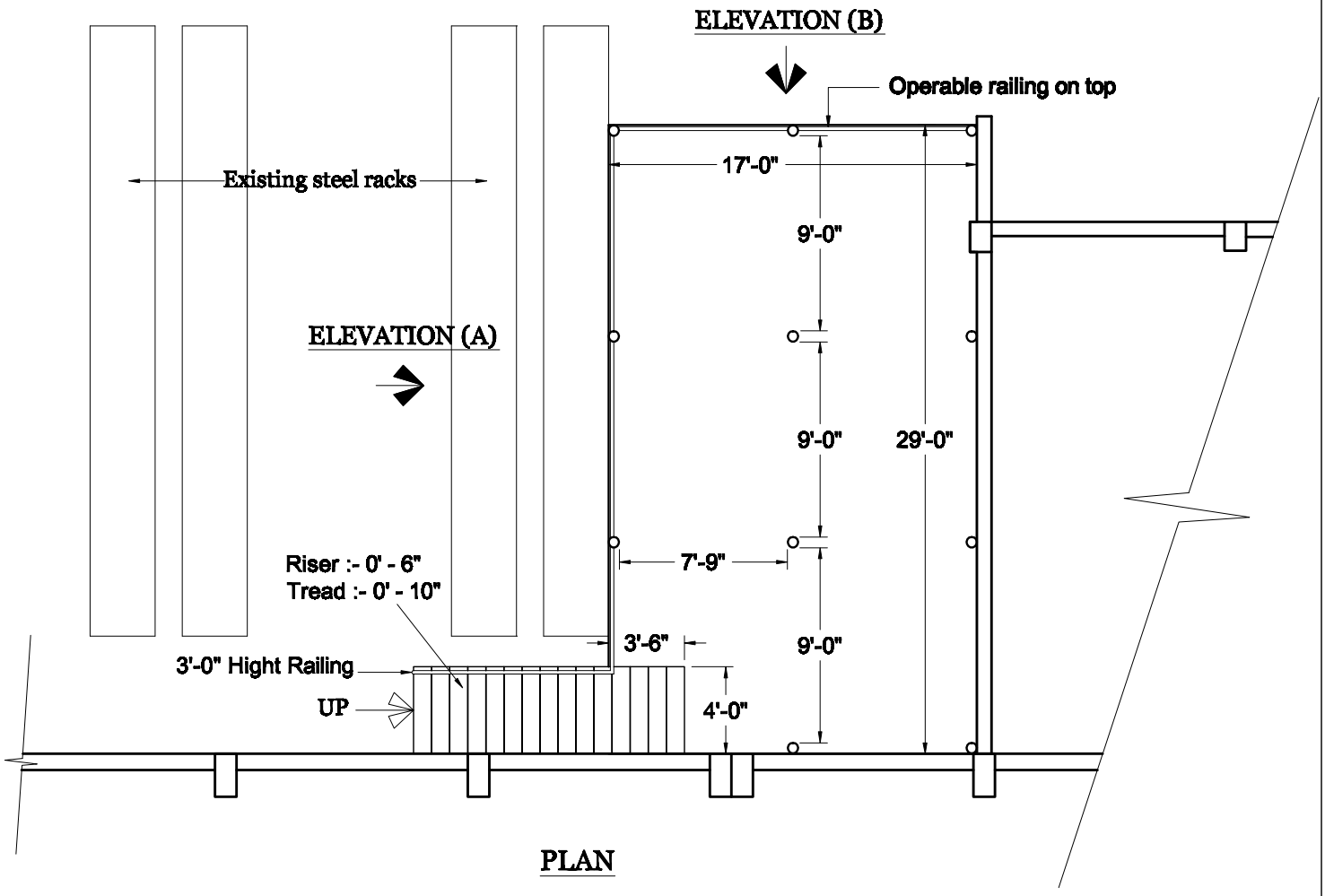

PLAN

	US EMBASSY COLOMBO SRI LANKA	PROJECT MEZZANINE FLOOR FOR WAREHOUSE	SCALE: 8 FEET TO AN INCH DRAWN BY : SULOCHANA DATE : 12/11/2012