AMERICAN CENTER, COLOMBO, SRI LANKA
BARRIER SYSTEM UPGRADE
100% DESIGN SUBMISSION
11/12/13

APPROVED

PROJECT MANAGEMENT & ENGINEERING ★ DIPLOMATIC SECURITY ★

DS/FSE/PME
U.S. DEPT. OF STATE
5800 BARCLAY DRIVE, SA-24
ALEXANDRIA, VA 22315-5700
TEL: (703)923-6601
FAX: (703)923-6802

BARRIER SYSTEM UPGRADE for COLOMBO, SRI LANKA

WARNING: This document is the property of the U.S. Government. Further reproduction and/or distribution is prohibited without the express written permission of The U.S. Department of State, Washington, DC, 20522-0620. Information on this document is not to be altered except with the written approval of the individual whose seal appears hereon.

DESIGN CONCEPT APPROVAL	DATE
PME GOV'T	
REVIEWED BY	DATE
PME BARRIER	
PME ENGINEERING	
PME CAD	

DRAWING TITLE: TITLE PAGE

PHASE: ☐ 30% ☐ 60% ☐ 90% ■ 100% ☐ AS-BUILT

CAD FILE NAME: CMBD101.dwg
DRAWING SCALE: NONE
PROJECT NUMBER: PME11-13-25
DRAWN BY: JB
DESIGNED BY: FG
DATE: 11/12/13
DRAWING NUMBER: SY1.01
SHEET 1 OF 24
CLASSIFICATION: SENSITIVE BUT UNCLASSIFIED
REV.

DRAWING TITLE	DRAWING NUMBER
TITLE PAGE	SY1.01
INDEX PAGE	SY1.02
SYMBOLS AND ABBREVIATIONS	SY1.03
SITE PLAN AND POST 1 RACK LAYOUT – DEMOLITION	SY2.01D
PARTIAL SITE PLAN AND RACK LAYOUT – NCAC – DEMOLITION	SY2.02D
PARTIAL SITE PLAN AND RACK LAYOUT – SCAC – DEMOLITION	SY2.03D
SITE PLAN AND POST 1 RACK LAYOUT – NEW WORK	SY2.01
PARTIAL SITE PLAN AND RACK LAYOUT – NCAC – NEW WORK	SY2.02
PARTIAL SITE PLAN AND RACK LAYOUT – SCAC – NEW WORK	SY2.03
BARRIER RISER DIAGRAM	SY4.01
BATTERY BACKUP PANEL – POWER CONNECTIONS	SY4.02
BARRIER CONTROL PANEL – TO BARRIER CONNECTIONS	SY4.03
BARRIER CONTROL PANEL – TO PERIPHERAL DEVICES	SY4.04
BARRIER CONTROL PANEL CONNECTRIONS – FROM NCAC – TO POST ONE AND SIC ROOM	SY4.05
BARRIER CONTROL PANEL CONNECTRIONS – FROM SCAC – TO POST ONE AND SIC ROOM	SY4.06
DETAILS	SY5.01
DETAILS	SY5.02
DETAILS	SY5.03
DETAILS	SY5.04
DETAILS	SY5.05
BATTERY BACKUP PANEL – DETAIL	SY5.06
BARRIER CONTROL PANEL – DETAIL	SY5.07
SCHEDULES	SY6.01
SCHEDULES	SY6.02

PROJECT MANAGEMENT & ENGINEERING ★ ALLIED SERVICES ★ DIPLOMATIC SECURITY
DS/FSE/PMB
U.S. DEPT. OF STATE
5801 BACKLICK RD. STE. 3-24
ALEXANDRIA, VA 22315-3700
TEL: (703)923-6601
FAX: (703)923-6602

BARRIER SYSTEM
UPGRADE
for
COLOMBO, SRI LANKA

WARNING: This document is the property of the U.S. Government. Further reproduction and/or distribution is prohibited without the written permission of The U.S. Department of State, Washington, DC. 20522-0820. Information on this document is not to be altered except with the written approval of the individual and approving agency.

DRAWING TITLE: INDEX PAGE

PHASE: ☐ 30% ☐ 60% ☐ 90% ■ 100% ☐ AS-BUILT

CAD FILE NAME: CMBD102.dwg

DRAWING SCALE: NONE

PROJECT NUMBER: PME11-13-25

DRAWN BY: JB
DESIGNED BY: FG
DATE: 11/12/13

DRAWING NUMBER: SY1.02
SHEET 2 OF 24

CLASSIFICATION: SENSITIVE BUT UNCLASSIFIED

REV.

SYMBOLS

- SIGNAL CONDUIT TO REMAIN
- SIGNAL CONDUIT (NEW OR DEMOLITION
- POWER CONDUIT TO REMAIN
- POWER CONDUIT (NEW OR DEMOLITION)
- (W) WATER PIPE TO REMAIN
- (W) WATER PIPE (NEW OR DEMOLITION)
- EXCAVATION (NEW OR DEMOLITION)
- (U) UNDER FLOOR OR GROUND CONDUIT TO REMAIN
- (U) UNDER FLOOR OF GROUND CONDUIT (NEW OR DEMOLITION)
- CONDUIT UP
- CONDUIT DOWN
- CONDUIT BREAK
- CONDUIT CAP
- PB PULL BOX (SIGNAL/POWER)
- HH HANDHOLE
- MH MANHOLE
- MH MANHOLE
- # DEMOLITION WORK KEY NOTE
- # NEW WORK KEY NOTE
- # EQUIPMENT IDENTIFICATION KEY NOTE
- LB CONDUIT OUTLET BODY TYPE "LB"
- J EQUIPMENT JUNCTION BOX
- TL TRAFFIC LIGHT
- BCP BARRIER CONTROL PANEL
- BTP BARRIER TERMINATION PANEL
- BBU BATTERY BACK-UP
- PE PHOTO-ELECTRONIC EYE
- IR INFRARED DETECTOR
- PDP POWER DISTRIBUTION PANEL
- FIBER FIBER PANEL
- HPU HYDRAULIC PUMP UNIT

ABBREVIATIONS

A	AMPERE
AC	ALTERNATING CURRENT
AFF	ABOVE FINISHED FLOOR
AFG	ABOVE FINISHED GRADE
AMP	AMPERE
APPROX	APPROXIMATE(LY)
ARCH	ARCHITECT(URAL)
ATC	ACOUSTICAL TILE CEILING
AUTO	AUTOMATIC
AUX	AUXILIARY
AVG	AVERAGE
AVR	AUTOMATIC VOLTAGE REGULATOR
AWG	AMERICAN WIRE GAUGE
BBU	BATTERY BACK-UP
BCP	BARRIER CONTROL PANEL
BFC	BELOW FINISHED CEILING
BFF	BELOW FINISHED FLOOR
BFG	BELOW FINISHED GRADE
BLDG	BUILDING
BP	BARRIER PANEL
BSMT	BASEMENT
C	CONDUIT
CAC	COMPOUND ACCESS CONTROL
CAT	CATALOG
CB	CIRCUIT BREAKER
CDU	CABINET POWER DISTRIBUTION UNIT
CFCI	CONTRACTOR FURNISHED CONTRACTOR INSTALLED
CFE	CONTRACTOR FURNISHED EQUIPMENT
CKT	CIRCUIT
CLG	CEILING
COL	COLUMN
COM	COMMON
CONT	CONTINUE, CONTINUOUS
DB	DECIBEL, DIRECT BURIAL
DC	DIRECT CURRENT
DET	DETAIL
DIA	DIAMETER
DIM	DIMENSION
DISC	DISCONNECT SWITCH
DN	DOWN
DPDT	DOUBLE POINT DOUBLE THROW
DPST	DOUBLE POINT SINGLE THROW
DOS	UNITED STATES DEPARTMENT OF STATE
DWG	DRAWING
E	EAST
(E)	EXISTING
EA	EACH
EC	ELEVTRICAL CABINET
EG	EQUIPMENT GROUND
EL	ELEVATION
ELEC	ELECTRIC(AL)
EMT	ELECTROMETALLIC TUBING
EQ	EQUAL
EQUIP	EQUIPMENT
ETC	ET CETERA
EXT	EXTERIOR
FA	FIRE ALARM
FLEX	FLEXIBLE
FMC	FLEXIBLE METAL CONDUIT
FSS	FUSED SAFETY SWITCH
FT	FEET, FOOT
GA	GAUGE
GALV	GALVANIZED
GFCI	GROUND FAULT CKT INTERRUPTER
GFE	GOVERNMENT FURNISHED EQUIPMENT
GFGI	GOVERNMENT FURNISHED GOVERNMENT INSTALLED
GOVT	GOVERNMENT
GRND	GROUND
H, HT	HEIGHT
HDW	HARDWARE
HEX	HEXAGONAL
HH	HANDHOLE
HOR	HORIZONTAL
HPU	HYDRAULIC POWER UNIT
HVAC	HEATING, VENTILATING AND AIR CONDITIONING
IAW	IN ACCORDANCE WITH
ID	INSIDE DIAMETER/IDENTIFICATION
IN	INCH(ES)
INSUL	INSULATION, INSULATED
I/O	INPUT AND OUTPUT
IR	INFRARED
JBOX	JUNCTION BOX
KG	KILOGRAM(S)
KO	KNOCKOUT
KW	KILOWATT(S)
L	LENGTH, LONG, LITER(S)
LFMC	LIQUID-TIGHT FLEXIBLE METAL CONDUIT
LxWxH	LENGTH x WIDTH x HEIGHT
m	METER
MAX	MAXIMUM
MECH	MECHANICAL
MDP	MAIN DISTRIBUTION PANEL
MFR	MANUFACTURER
MH	MOUNTING HEIGHT, MANHOLE
MIN	MINIMUM
MISC	MISCELLANEOUS
mm	MILLIMETER
MSGQ	MARINE SECURITY GUARD QUARTERS
MTD	MOUNTED
MTG	MOUNTING
N	NORTH
NC	NORMALLY CLOSED
NEC	NATIONAL ELECTRICAL CODE
NEMA	NATIONAL ELECTRICAL MANUFACTURERS ASSOCIATION
NFSS	NON-FUSED SAFETY SWITCH
NO	NORMALLY OPEN
NOM	NOMINAL
OD	OUTSIDE DIAMETER
OH	OVERHEAD
P	POWER
PAC	PEDESTRIAN ACCESS CONTROL
PB	PULL BOX
PDS	PROTECTED DISTRIBUTION SYSTEMS
PDP	POWER DISTRIBUTION PANEL
PE	PHOTO ELECTRONIC EYE
PNL	PANEL
PRELIM	PRELIMINARY
PSO	POST SECURITY OFFICER
PSU	POWER SUPPLY UNIT
PVC	POLYVINYL CHLORIDE
R	RADIUS, RISER
RECPT	RECEPTACLE
REINF	REINFORCEMENT
REG	REGULATOR
REQD	REQUIRED
REV	REVISION
RGS	RIGID GALVANIZED STEEL
RM	ROOM
RSO	REGIONAL SECURITY OFFICER
S	SIGNAL, SOUTH
SCH	SCHEDULE
SECT	SECTION
SEO	SECURITY ENGINEERING OFFICER
SH	SHIELD
SHT	SHEET
S.O.C.	SECURITY OPERATIONS CENTER
SPDT	SINGLE POLE DOUBLE THROW
SPEC	SPECIFICATION
SQ	SQUARE
SUSP	SUSPENDED
SW	SWITCH
TEMP	TEMPORARY, TEMPERATURE
THHN	THERMOPLASTIC HIGH HEAT RESISTANT NYLON
THRU	THROUGH
TYP	TYPICAL
U	UNSHIELDED
(U)	UNDERGROUND
UFAS	UNIFORMED FEDERAL ACCESSIBILITY STANDARDS
UNO	UNLESS NOTED OTHERWISE
UPS	UNINTERRUPTIBLE POWER SUPPLY
V	VOLT(S)
VERT	VERTICAL
W	WIDTH, WIDE, WEST, WATT(S)
W/	WITH
W/O	WITHOUT
WT	WEIGHT
WTMD	WALK THROUGH METAL DETECTOR
ZN	ZONE
±	PLUS/MINUS
ø	DIAMETER, PHASE

NOTE:

NOT ALL SYMBOLS AND ABBREVIATIONS LISTED ARE APPLICABLE TO THIS DRAWING PACKAGE.

MANAGEMENT & ENGINEERING SERVICES ★ PROJECT DIPLOMATIC
DS/PSE/PMD
U.S. DEPT. OF STATE
5801 DUKE STREET, SUITE 324
ALEXANDRIA, VA 22315-5700
TEL: (703)923-6601
FAX: (703)923-6602

BARRIER SYSTEM UPGRADE for COLOMBO, SRI LANKA

WARNING: This document is the property of the U.S. Government. Further reproduction and/or distribution is strictly prohibited without the written permission of the U.S. Department of State, Washington, DC. 20522-0620. Information on this document is not to be altered except with the written approval of the individual who authored and approved it/them.

DRAWING TITLE: SYMBOLS AND ABBREVIATIONS

PHASE: ☐ AS-BUILT ■ 100% ☐ 90% ☐ 60% ☐ 30%

CAD FILE NAME	CMBD103.dwg
DRAWING SCALE	NONE
PROJECT NUMBER	PME11-13-25
DRAWN BY	JB
DESIGNED BY	FG
DATE	11/12/13
DRAWING NUMBER	SY1.03
SHEET	3 OF 24
CLASSIFICATION	SENSITIVE BUT UNCLASSIFIED
REV.	

EQUIPMENT LIST – EXISTING

1. COUNTER TOP.

EQUIPMENT LIST – DEMOLITION

2. NORSHIELD BARRIER CONTROL CONSOLE. (2 PLACES)

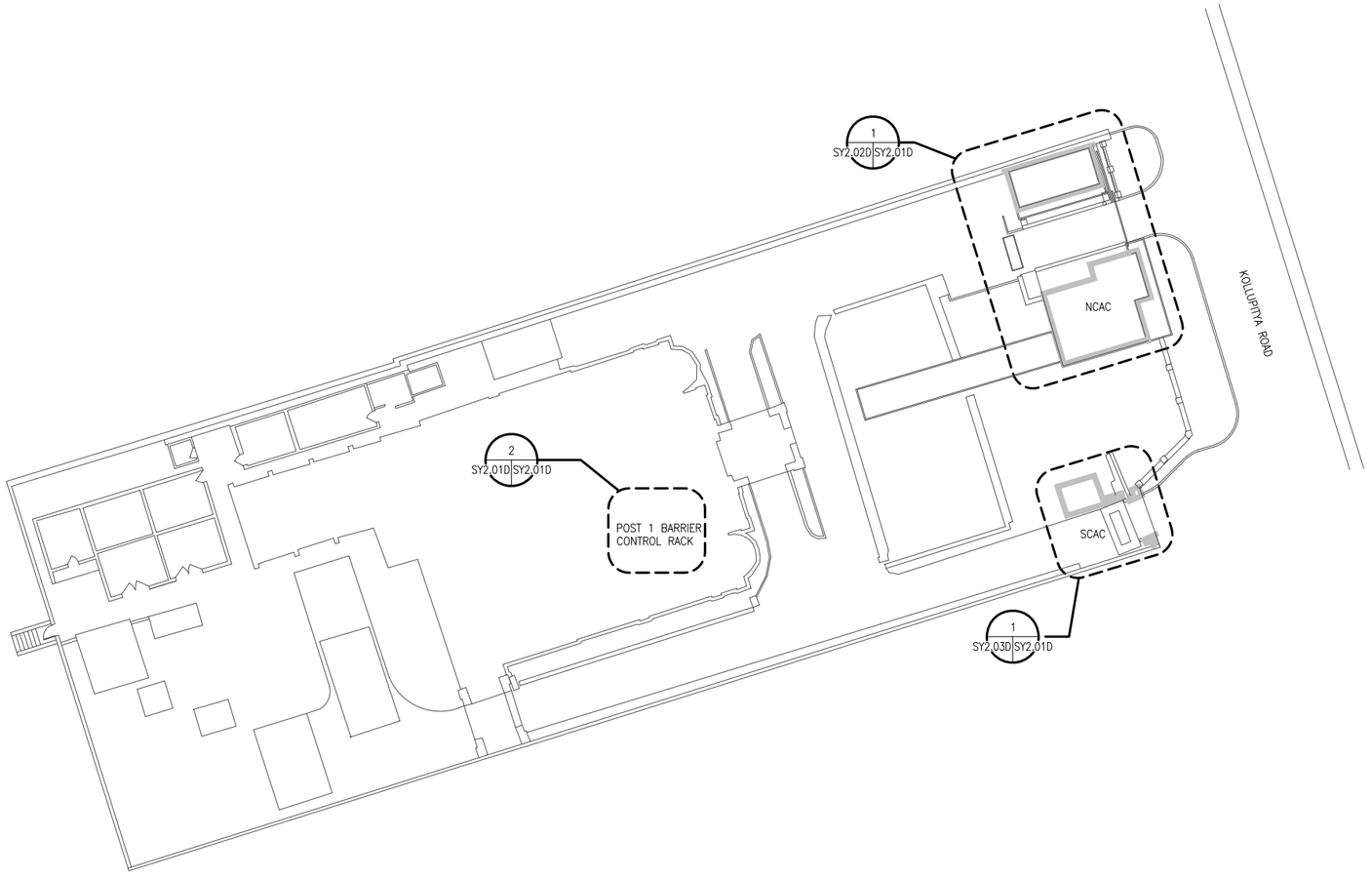

1 SITE PLAN
SY2.01D SY2.01D SCALE: 1:200

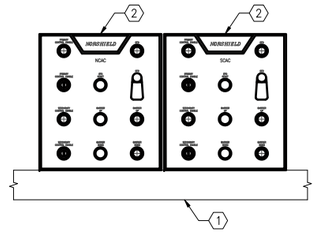

2 POST 1 RACK LAYOUT
SY2.01D SY2.01D SCALE: 1:5

PROJECT MANAGEMENT & ENGINEERING ★ DIPLOMATIC SECURITY ★
DS/FSE/PME
U.S. DEPT. OF STATE
5600 BARCLAY DRIVE, SA-24
ALEXANDRIA, VA 22315-5700
TEL: (703)923-6601
FAX: (703)923-6802

BARRIER SYSTEM UPGRADE for COLOMBO, SRI LANKA

WARNING: This document is the property of the U.S. Government. Further reproduction and/or distribution is prohibited without the express written permission of the U.S. Department of State, Washington, DC, 20522-0620. Information on this document is not to be altered except with the written approval of the individual whose seal appears hereon.

GRAPHICAL SCALES

1:200	0	2000	4000	6000	8000	10000	20000mm
	0	8'	16'	24'	32'	64 ft
1:5	0	50	100	150	200	250	500mm
	0	3"	6"	9"	18 in

DRAWING TITLE
SITE PLAN AND POST 1 RACK LAYOUT DEMOLITION

PHASE: ☐ 30% ☐ 60% ☐ 90% ■ 100% ☐ AS-BUILT

CAD FILE NAME: CMBD201.dwg
DRAWING SCALE: AS NOTED
PROJECT NUMBER: PME11-13-25
DRAWN BY: JB
DESIGNED BY: FG
DATE: 11/12/13
DRAWING NUMBER: SY2.01D
SHEET 4 OF 24
CLASSIFICATION: SENSITIVE BUT UNCLASSIFIED
REV.

SENSITIVE BUT UNCLASSIFIED

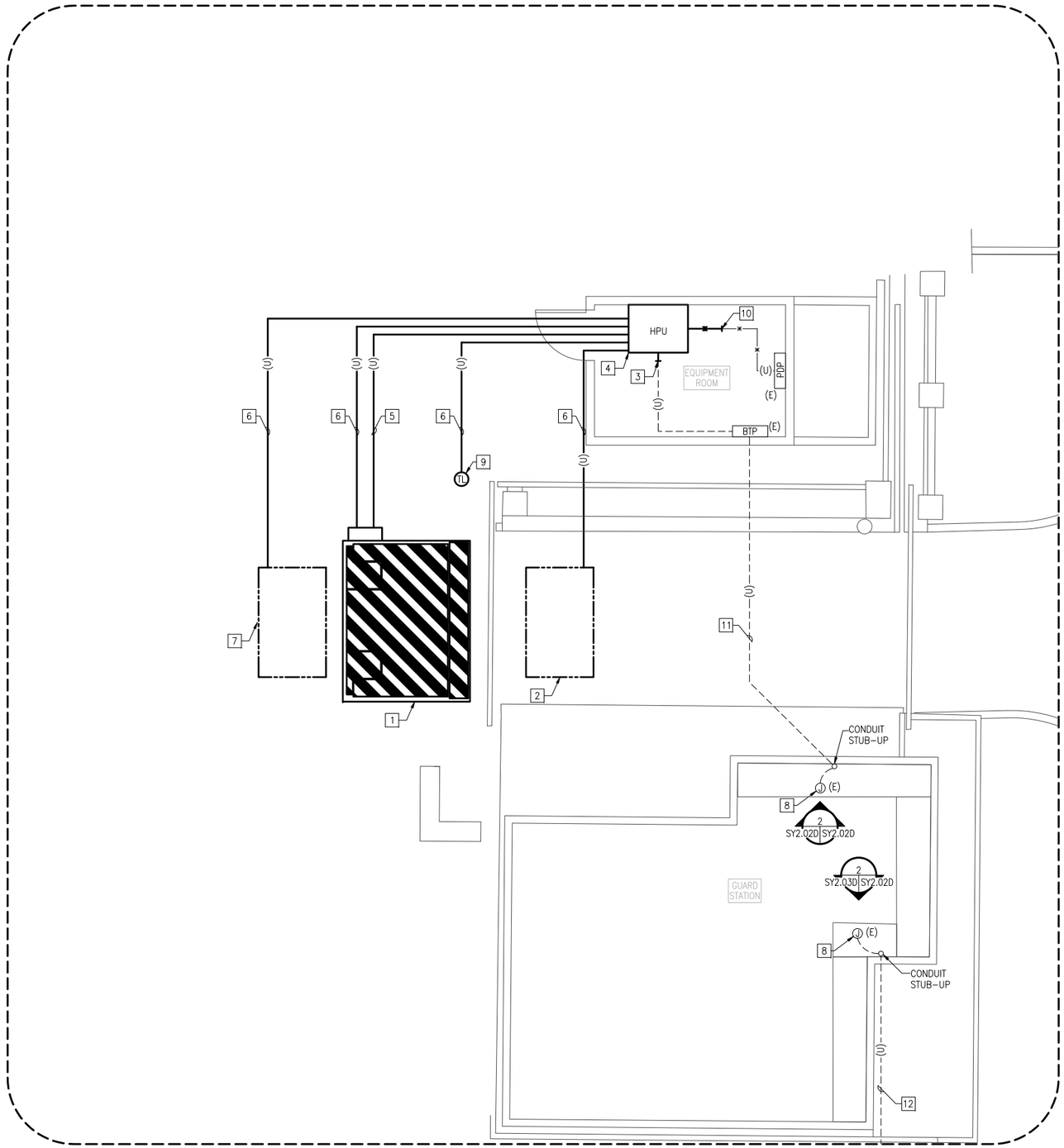

1 SY2.01D SY2.02D PARTIAL SITE PLAN – NCAC SCALE: 1:40

DRAWING KEY NOTES

1. REMOVE EXISTING NOR 82 VEHICLE ARREST SYSTEM.
2. DISCONNECT THE VEHICLE LOOP DETECTOR AND ABANDON IN PLACE.
3. REMOVE CONTROL WIRE FROM EXISTING HPU BACK TO BTP. CUT CONDUIT FOR REUSE WITH NEW SYSTEM.
4. REMOVE EXISTING HPU AND CONCRETE PAD. REMOVE OR CUT CONDUIT BACK BELOW GRADE, CAP AND ABANDON IN PLACE.
5. REMOVE HYDRAULIC LINES BETWEEN EXISTING HPU AND BARRIER. REMOVE OR CUT CONDUIT BACK BEYOND WORK AREA. CAP AND ABANDON IN PLACE.
6. REMOVE ALL WIRES AND CABLES BETWEEN EXISTING HPU, SUPPORT EQUIPMENT AND BARRIER. REMOVE OR CUT CONDUIT BACK BEYOND WORK AREA. CAP AND ABANDON IN PLACE. (4 PLACES)
7. DISCONNECT AND REMOVE VEHICLE LOOP DETECTOR.
8. REMOVE BARRIER AND GATE CONTROLS IN EXISTING EQUIPMENT RACK.
9. REMOVE TRAFFIC LIGHT SUPPORT POST AND TRAFFIC LIGHT.
10. REMOVE POWER FEEDER FROM PDP TO HPU. CUT CONDUIT FOR REUSE WITH NEW SYSTEM.
11. REMOVE EXISTING CONTROL CABLES BETWEEN BTP AND EQUIPMENT RACK IN GUARD STATION. CONDUIT TO BE REUSED.
12. REMOVE EXISTING CONTROL CABLES BETWEEN SCAC AND EQUIPMENT RACK IN GUARD STATION. CONDUIT TO BE REUSED.

EQUIPMENT LIST – EXISTING

1. COUNTER TOP

EQUIPMENT LIST – DEMOLITION

2. NORSHIELD BARRIER CONTROL CONSOLE
3. GATE CONTROL STATION (RELOCATE 2 PLACES)

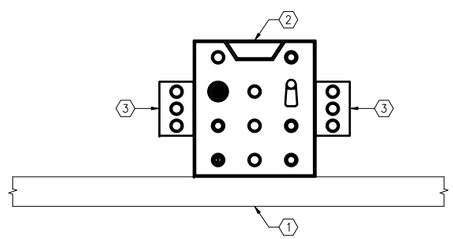

2 SY2.02D SY2.02D RACK LAYOUT SCALE: 1:5

SENSITIVE BUT UNCLASSIFIED

PROJECT MANAGEMENT & ENGINEERING ★ DIPLOMATIC SECURITY ★

DS/FSE/PME
U.S. DEPT. OF STATE
5800 BARCLAY DRIVE, SA-24
ALEXANDRIA, VA 22315-5700
TEL: (703)923-6601
FAX: (703)923-6802

BARRIER SYSTEM UPGRADE for COLOMBO, SRI LANKA

WARNING: This document is the property of the U.S. Government. Further reproduction and/or distribution is prohibited without the express written permission of The U.S. Department of State, Washington, DC, 20522-0620. Information on this document is not to be altered except with the written approval of the individual whose seal appears hereon.

KEYPLAN

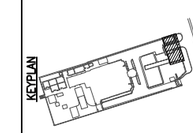

GRAPHICAL SCALES

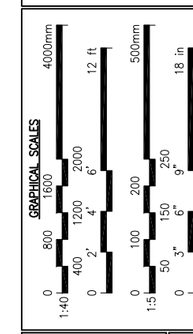

DRAWING TITLE: PARTIAL SITE PLAN AND RACK LAYOUT NCAC DEMOLITION

PHASE: ☐ 30% ☐ 60% ☐ 90% ■ 100% ☐ AS-BUILT

CAD FILE NAME: CMBD202.dwg

DRAWING SCALE: AS NOTED

PROJECT NUMBER: PME11-13-25

DRAWN BY: JB

DESIGNED BY: FG

DATE: 11/12/13

DRAWING NUMBER: SY2.02D

SHEET 5 OF 24

CLASSIFICATION: SENSITIVE BUT UNCLASSIFIED

REV.

DRAWING KEY NOTES

1. REMOVE EXISTING NOR 82 VEHICLE ARREST SYSTEM.
2. DISCONNECT THE VEHICLE LOOP DETECTOR AND ABANDON IN PLACE.
3. REMOVE EXISTING CONTROL CABLES BETWEEN HPU AND EQUIPMENT RACK IN GUARD STATION. CUT CONDUIT FOR REUSE WITH NEW SYSTEM.
4. REMOVE EXISTING HPU AND CONCRETE PAD. REMOVE OR CUT CONDUIT BACK BELOW GRADE, CAP AND ABANDON IN PLACE.
5. REMOVE HYDRAULIC LINES BETWEEN EXISTING HPU AND BARRIER. REMOVE OR CUT CONDUIT BACK BEYOND WORK AREA. CAP AND ABANDON IN PLACE.
6. REMOVE All WIRES AND CABLES BETWEEN EXISTING HPU, SUPPORT EQUIPMENT AND BARRIER. REMOVE OR CUT CONDUIT BACK BEYOND WORK AREA. CAP AND ABANDON IN PLACE. (4 PLACES)
7. DISCONNECT AND REMOVE VEHICLE LOOP DETECTOR.
8. REMOVE TRAFFIC LIGHT SUPPORT POST AND TRAFFIC LIGHT.
9. REMOVE POWER FEEDER FROM PDP TO HPU. REMOVE OR CUT CONDUIT BACK BELOW WORK AREA. CAP AND ABANDON IN PLACE.

EQUIPMENT LIST – EXISTING

1. COUNTER TOP

EQUIPMENT LIST – DEMOLITION

2. NORSHIELD BARRIER CONTROL CONSOLE
3. GATE CONTROL STATION (RELOCATE)

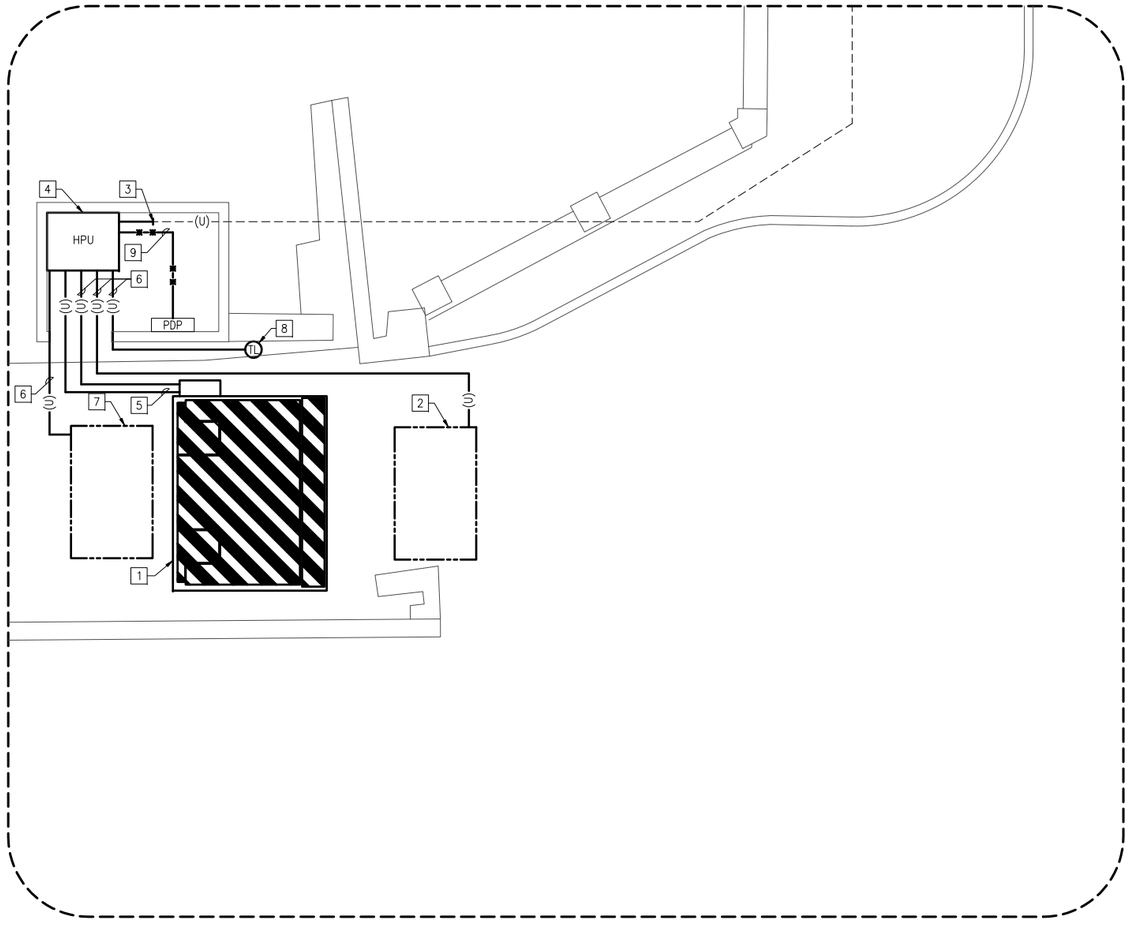

1 PARTIAL SITE PLAN – SCAC
SY2.01D SY2.03D SCALE: 1:40

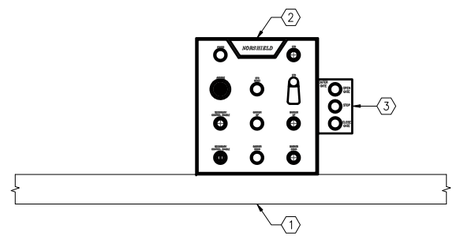

2 RACK LAYOUT
SY2.02D SY2.03D SCALE: 1:5

PROJECT MANAGEMENT & ENGINEERING ★ DIPLOMATIC SECURITY ★

DS/FSE/PME
U.S. DEPT. OF STATE
5800 BARCLAY DRIVE, SA-24
ALEXANDRIA, VA 22315-5700
TEL: (703)923-6601
FAX: (703)923-6802

BARRIER SYSTEM UPGRADE for COLOMBO, SRI LANKA

WARNING: This document is the property of the U.S. Government. Further reproduction and/or distribution is prohibited without the express written permission of the U.S. Department of State, Washington, DC, 20522-0620. Information on this document is not to be altered except with the written approval of the individual whose seal appears hereon.

KEYPLAN

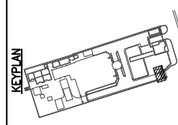

GRAPHICAL SCALES

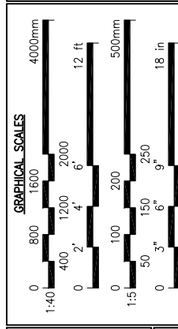

DRAWING TITLE
PARTIAL SITE PLAN AND RACK LAYOUT
SCAC
DEMOLITION

PHASE ☐ 30% ☐ 60% ☐ 90% ■ 100% ☐ AS-BUILT

CAD FILE NAME: CMBD203.dwg
DRAWING SCALE: AS NOTED
PROJECT NUMBER: PME11-13-25
DRAWN BY: JB
DESIGNED BY: FG
DATE: 11/12/13
DRAWING NUMBER: SY2.03D
SHEET 6 OF 24
CLASSIFICATION: SENSITIVE BUT UNCLASSIFIED
REV.

SENSITIVE BUT UNCLASSIFIED

EQUIPMENT LIST – EXISTING

1. COUNTER TOP.

EQUIPMENT LIST – NEW WORK

2. RSSI BARRIER CONTROL

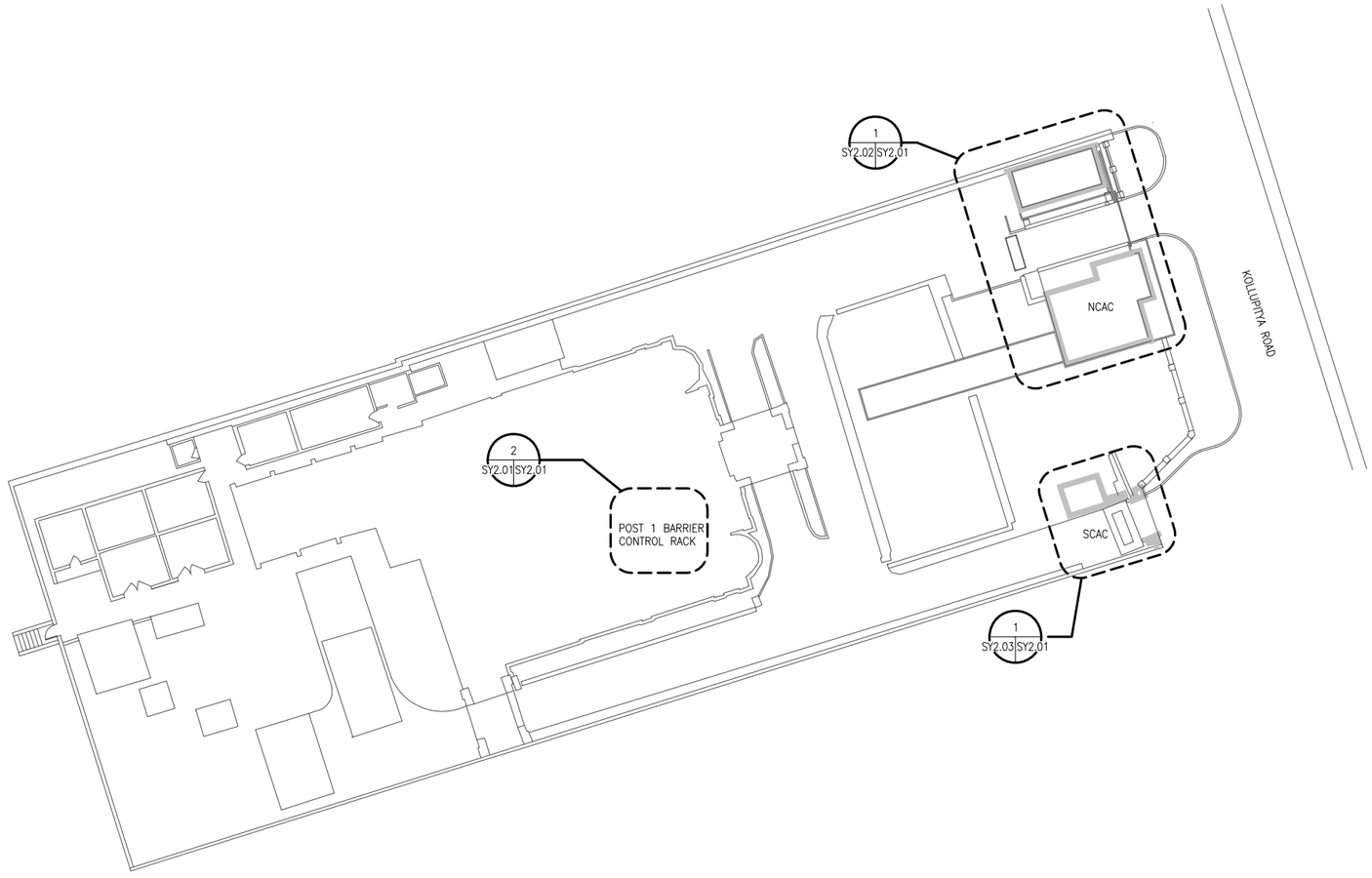

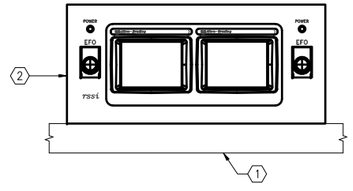

1 SY2.01 SY2.01 SITE PLAN
SCALE: 1:200

2 SY2.01 SY2.01 POST 1 RACK LAYOUT
SCALE: 1:5

SENSITIVE BUT UNCLASSIFIED

PROJECT MANAGEMENT & ENGINEERING ★ DIPLOMATIC SECURITY

DS/FSE/PME
U.S. DEPT. OF STATE
5800 BARCLAY DRIVE, SA-24
ALEXANDRIA, VA 22315-5700
TEL: (703)923-6601
FAX: (703)923-6802

BARRIER SYSTEM UPGRADE for COLOMBO, SRI LANKA

WARNING: This document is the property of the U.S. Government. Further reproduction and/or distribution is prohibited without the express written permission of The U.S. Department of State, Washington, DC, 20522-0620. Information on this document is not to be altered except with the written approval of the individual whose seal appears hereon.

GRAPHICAL SCALES

1:250	0	5000	10000	25000mm
	2500	7500	12500	80 ft
	0	10' 20' 30' 40'		
1:5	0	100	200	500mm
	50	150	250	18 in
	0	3" 6" 9"		

DRAWING TITLE
SITE PLAN AND POST 1 RACK LAYOUT
NEW WORK

PHASE ☐ 30% ☐ 60% ☐ 90% ■ 100% ☐ AS-BUILT

CAD FILE NAME: CMBD201.dwg
DRAWING SCALE: AS NOTED
PROJECT NUMBER: PME11-13-25
DRAWN BY: JB
DESIGNED BY: FG
DATE: 11/12/13
DRAWING NUMBER: SY2.01
SHEET 7 OF 24
CLASSIFICATION: SENSITIVE BUT UNCLASSIFIED
REV.

SENSITIVE BUT UNCLASSIFIED

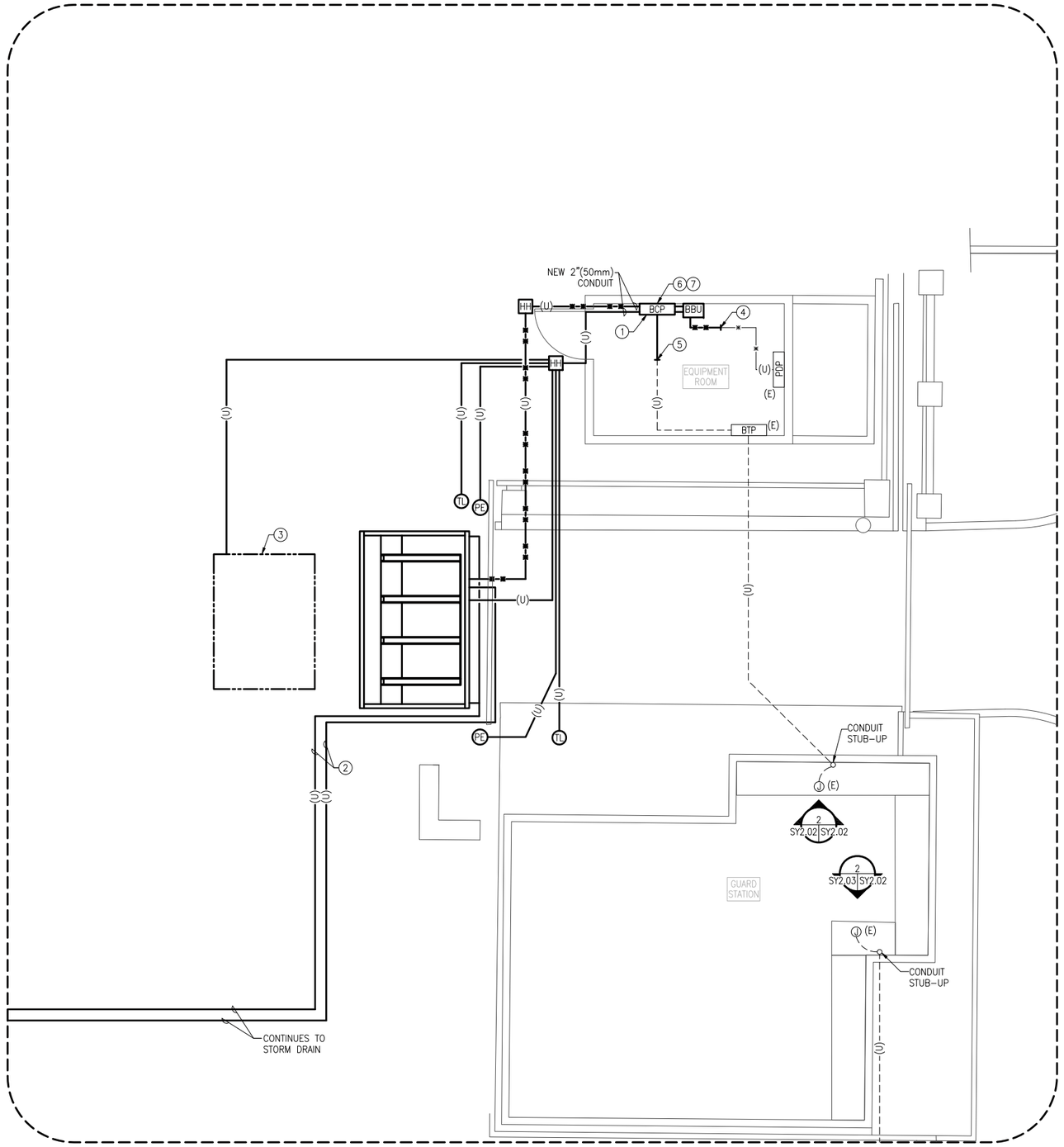

1 SY2.01 SY2.02 PARTIAL SITE PLAN – NCAC
SCALE: 1:40

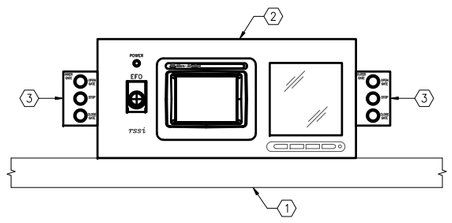

2 SY2.02 SY2.02 RACK LAYOUT
SCALE: 1:5

DRAWING NOTES

1. ALL CONDUIT IS 1"(25mm) RGS UNLESS NOTED OTHERWISE.

DRAWING KEY NOTES

1. INSTALL GROUND WIRE BETWEEN GROUND LUG IN BBU AND EXISTING GROUND SYSTEM. WHERE BBU AND BCP ARE INSTALLED OUTSIDE OF BUILDING, INSTALL (2)10'(3048mm) COPPER GROUND RODS AND CONNECT TO THE GROUND LUG IN BBU USING #6 COPPER WIRE. GROUNDING SHALL BE IN ACCORDANCE WITH LATEST EDITION OF NFPA 70, NATIONAL ELECTRICAL CODE, ART:250.
2. INSTALL NEW 4"(102mm) PVC GRAVITY DRAIN SYSTEM FROM OUTLETS ON BARRIER (2 PLACES) TO EXISTING STORM DRAIN. INSTALL NEW 1"(25mm) PVC SUMP PUMP, DISCHARGE LINE FROM SYSTEM PUMP TO STORM DRAIN.
3. INSTALL NEW SAFETY LOOP.
4. EXTEND EXISTING CONDUIT WITH NEW POWER FEED. PATCH AND/OR REPAIR EXISTING CONCRETE WALKWAY.
5. EXTEND EXISTING CONTROL CONDUIT FROM BTP TO NEW BCP. PATCH AND/OR REPAIR EXISTING CONCRETE WALKWAY.
6. NEW FIBER MODULE SUPPLIED BY RSSI.
7. NEW FIBER TO POST 1 SIC ROOM USING EXISTING CONDUIT.

EQUIPMENT LIST – EXISTING

1. COUNTER TOP

EQUIPMENT LIST – NEW WORK

2. RSSI BARRIER CONTROLS
3. GATE CONTROL STATION (RELOCATED 2 PLACES)

PROJECT MANAGEMENT & ENGINEERING ★ DIPLOMATIC SECURITY ★
DS/FSE/PME
U.S. DEPT. OF STATE
5800 BARCLAY DRIVE, SA-24
ALEXANDRIA, VA 22315-5700
TEL: (703)923-6601
FAX: (703)923-6802

BARRIER SYSTEM UPGRADE for COLOMBO, SRI LANKA

WARNING: This document is the property of the U.S. Government. Further reproduction and/or distribution is prohibited without the express written permission of The U.S. Department of State, Washington, DC, 20522-0620. Information on this document is not to be altered except with the written approval of the individual whose seal appears hereon.

KEYPLAN

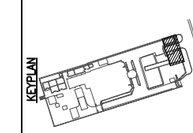

GRAPHICAL SCALES

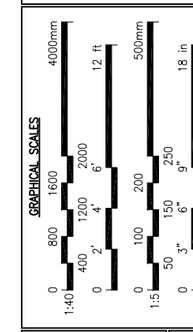

DRAWING TITLE
PARTIAL SITE PLAN AND RACK LAYOUT
NCAC
NEW WORK

PHASE ☐ 30% ☐ 60% ☐ 90% ■ 100% ☐ AS-BUILT

CAD FILE NAME: CMBD202.dwg
DRAWING SCALE: AS NOTED
PROJECT NUMBER: PME11-13-25
DRAWN BY: JB
DESIGNED BY: FG
DATE: 11/12/13
DRAWING NUMBER: SY2.02
SHEET 8 OF 24
CLASSIFICATION: SENSITIVE BUT UNCLASSIFIED
REV.

SENSITIVE BUT UNCLASSIFIED

SENSITIVE BUT UNCLASSIFIED

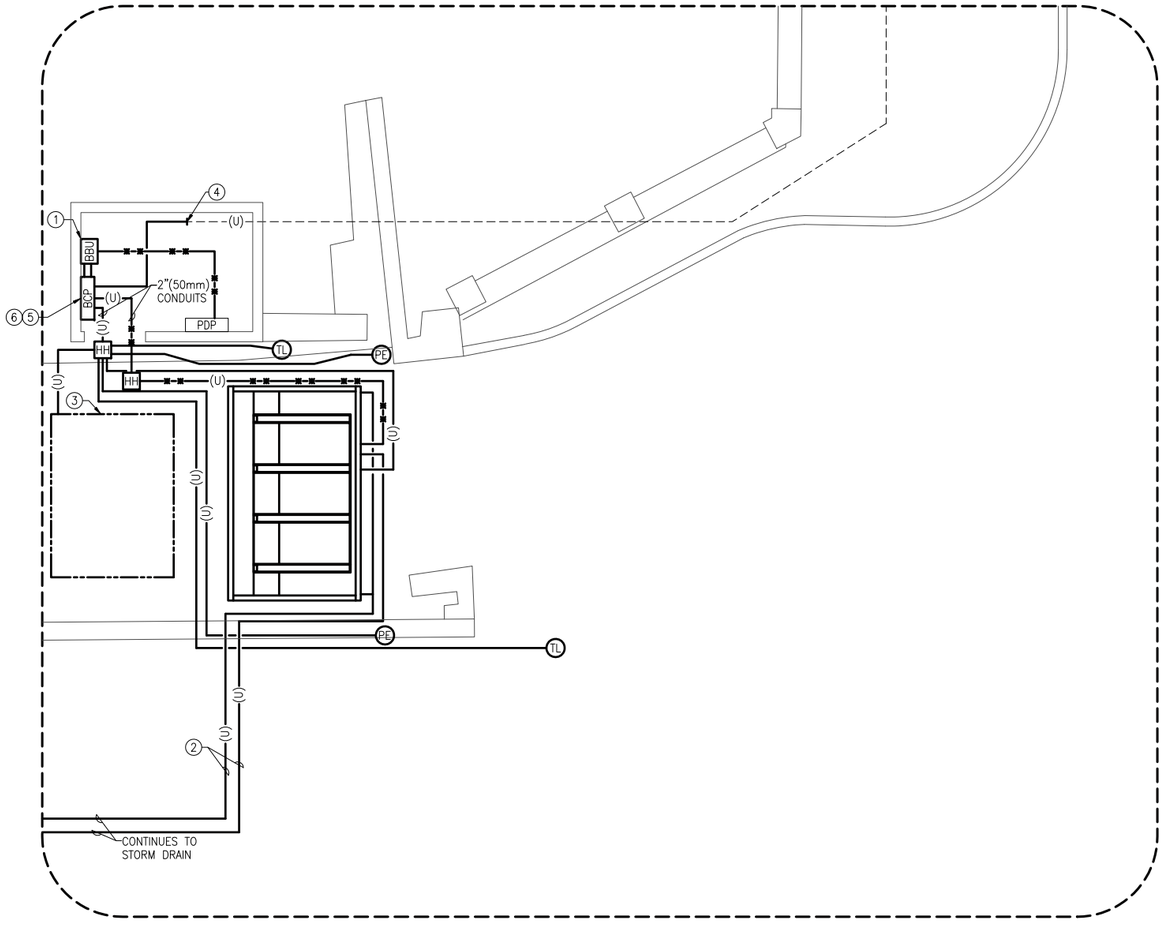

1 SY2.01 SY2.03 PARTIAL SITE PLAN – SCAC
SCALE: 1:40

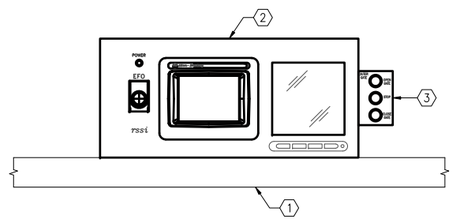

2 SY2.02 SY2.03 RACK LAYOUT
SCALE: 1:5

DRAWING NOTES

1. ALL CONDUIT IS 1"(25mm) RGS UNLESS NOTED OTHERWISE.

DRAWING KEY NOTES

1. INSTALL GROUND WIRE BETWEEN GROUND LUG IN BBU AND EXISTING GROUND SYSTEM. WHERE BBU AND BCP ARE INSTALLED OUTSIDE OF BUILDING, INSTALL (2)10'(3048mm) COPPER GROUND RODS AND CONNECT TO THE GROUND LUG IN BBU USING #6 COPPER WIRE. GROUNDING SHALL BE IN ACCORDANCE WITH LATEST EDITION OF NFPA 70, NATIONAL ELECTRICAL CODE, ART:250.
2. INSTALL NEW 4"(102mm) PVC GRAVITY DRAIN SYSTEM FROM OUTLETS ON BARRIER (2 PLACES) TO EXISTING STORM DRAIN. INSTALL NEW 1"(25mm) PVC SUMP PUMP, DISCHARGE LINE FROM SYSTEM PUMP TO STORM DRAIN.
3. INSTALL NEW SAFETY LOOP.
4. EXTEND EXISTING CONTROL CONDUIT FROM GUARD STATION TO NEW BCP. PATCH AND/OR REPAIR EXISTING CONCRETE SLAB.
5. NEW FIBER MODULE SUPPLIED BY RSSI.
6. NEW FIBER TO POST 1 SIC ROOM USING EXISTING CONDUIT.

EQUIPMENT LIST – EXISTING

1. COUNTER TOP.

EQUIPMENT LIST – NEW WORK

2. RSSI BARRIER CONTROLS
3. GATE CONTROL STATION (RELOCATED)

PROJECT MANAGEMENT & ENGINEERING ★ DIPLOMATIC SECURITY ★
DS/FSE/PME
U.S. DEPT. OF STATE
5800 BARCLAY DRIVE, SA-24
ALEXANDRIA, VA 22315-5700
TEL: (703)923-6601
FAX: (703)923-6802

BARRIER SYSTEM UPGRADE for COLOMBO, SRI LANKA

WARNING: This document is the property of the U.S. Government. Further reproduction and/or distribution is prohibited without the express written permission of The U.S. Department of State, Washington, DC, 20522-0620. Information on this document is not to be altered except with the written approval of the individual whose seal appears hereon.

KEYPLAN

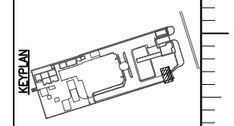

GRAPHICAL SCALES

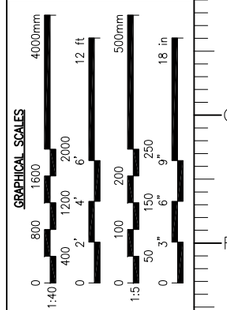

DRAWING TITLE
PARTIAL SITE PLAN AND RACK LAYOUT
SCAC
NEW WORK

PHASE ☐ 30% ☐ 60% ☐ 90% ■ 100% ☐ AS-BUILT

CAD FILE NAME: CMBD203.dwg
DRAWING SCALE: AS NOTED
PROJECT NUMBER: PME11-13-25
DRAWN BY: JB
DESIGNED BY: FG
DATE: 11/12/13
DRAWING NUMBER: SY2.03
SHEET 9 OF 24
CLASSIFICATION: SENSITIVE BUT UNCLASSIFIED
REV.

SENSITIVE BUT UNCLASSIFIED

WIRE SCHEDULE

WIRE DESIGNATION	DESCRIPTION	MFT CAT. NO.	DS CAT#	NOTE
A	1 COND/14AWG GREEN, STRANDED	–	–	–
B	2 PR/18 AWG	9156	WIR229	–
C	3 PR/18 AWG	8690	WIR128	–
D	5 PR/18 AWG	9159	WIR123	–
E	6 PR/18 AWG	8691	WIR540/539	–
F	1 PR/12 AWG	9412	WIR233/234/239	–
G	1 COND/6 AWG, THHN, GREEN, STRAND	N/A	WIR576	–
H	RG-59/U	9259	WIR113/112/120	–
J	27 PR/22 AWG SHIELDED	8773	WIR193	–
K	3 COND/10 AWG	–	–	–
L	14 AWG, THHN, STRANDED (RED)	–	–	–
M	14 AWG, THHN, STRANDED (BLACK)	–	–	–
N	1 PR/14AWG STRANDED	–	–	–
O	4 COND/22 AWG, SHIELDED/TWISTED PAIR	8723	WIR119	–
P	2 COND/22 AWG	8442	WIR243	–
Q	2 PR/22 AWG	9744	WIR200	–
R	4 PR/22 AWG	9746	WIR259	–
S	(3)1 COND/12 AWG, THHN, SOLID	N/A	WIR500/501/502	2
T	(2)1 COND/12 AWG, THHN, STRAND	–	–	–
U	4 COND/22 AWG, SHIELDED	8729	WIR218/227	–
V	6 STRAND FIBER	N/A	WIR730/725	–
W	24 STRAND FIBER	N/A	WIR732/727	–
X	1 PR/18 AWG SHIELDED	8760	WIR235	–
Y	(3)COND/6 AWG, THHN, STRANDED	N/A	WIR576/577/578	2
Z	(3)COND/8 AWG, THHN, STRANDED	N/A	WIR478/488/489	2
AA	(5)COND/10 AWG, THHN, STRANDED	N/A	N/A	3
BB	(5)COND 16AWG OMNICABLE Tray Cable	A11605	–	–
CC	15 PR/22 AWG	8749	WIR242	–
GG	2 PR/18 AWG SHIELDED	5341FE	WIR143/144	–
JJ	3 COND/18 AWG SHIELDED	8770	WIR238	–
PP	CAT-5E-TYPE CMXF	–	–	–
QQ	CAT-6	7851A – BLUE	WIR717	–
SS	1 PR/24 AWG SHIELDED	9841	WIR134/207	–
TT	18 AWG TFFN	N/A	WIR515	–
WW	(2) STRAND 62.5 MULTIMODE FIBER	002K8F-31130-29	–	–
XX	(6) COND/10 AWG STRANDED	–	–	4
YY	16AWG/STRANDED XLPE INSULATED 600 VOLT	–	–	–
ZZ	(2) COND 16AWG THHN STRANDED	–	–	–

NOTES:
1. NOT ALL WIRE TYPES LISTED IN THIS SCHEDULE ARE APPLICABLE TO THIS DRAWING PACKAGE.
2. THIS WIRE TYPE IS COMPRISED OF (3) THREE SINGLE CONDUCTORS; ONE BLACK, ONE WHITE, AND ONE GREEN.
3. NO CURRENT CATALOG NUMBER.
4. THIS DESIGNATION IS FOR NON-STANDARD WIRE TYPES. WIRE TYPE IS TO BE DETERMINED BY DESIGN TEAM. WIRE TYPE IS POST-SPECIFIC.

WIRE CONNECTOR SCHEDULE

PART NO.	MFT CAT. NO.	WIRE RANGE	COLOR
0710572	ML5-20	24-22AWG	CLEAR
0710573	ML5-16	20-18AWG	RED
0710574	ML5-14	16-14AWG	BLUE
0710575	ML5-10	12-10AWG	YELLOW

DRAWING KEY NOTES

1. RSSI CONVERTOR BOX
2. (3)10AWG, GROUND WIRES
3. IF DISTANCE IS GREATER THAN 300FT(91.44m) INSTALL FIBER IN PLACE OF CAT 5.

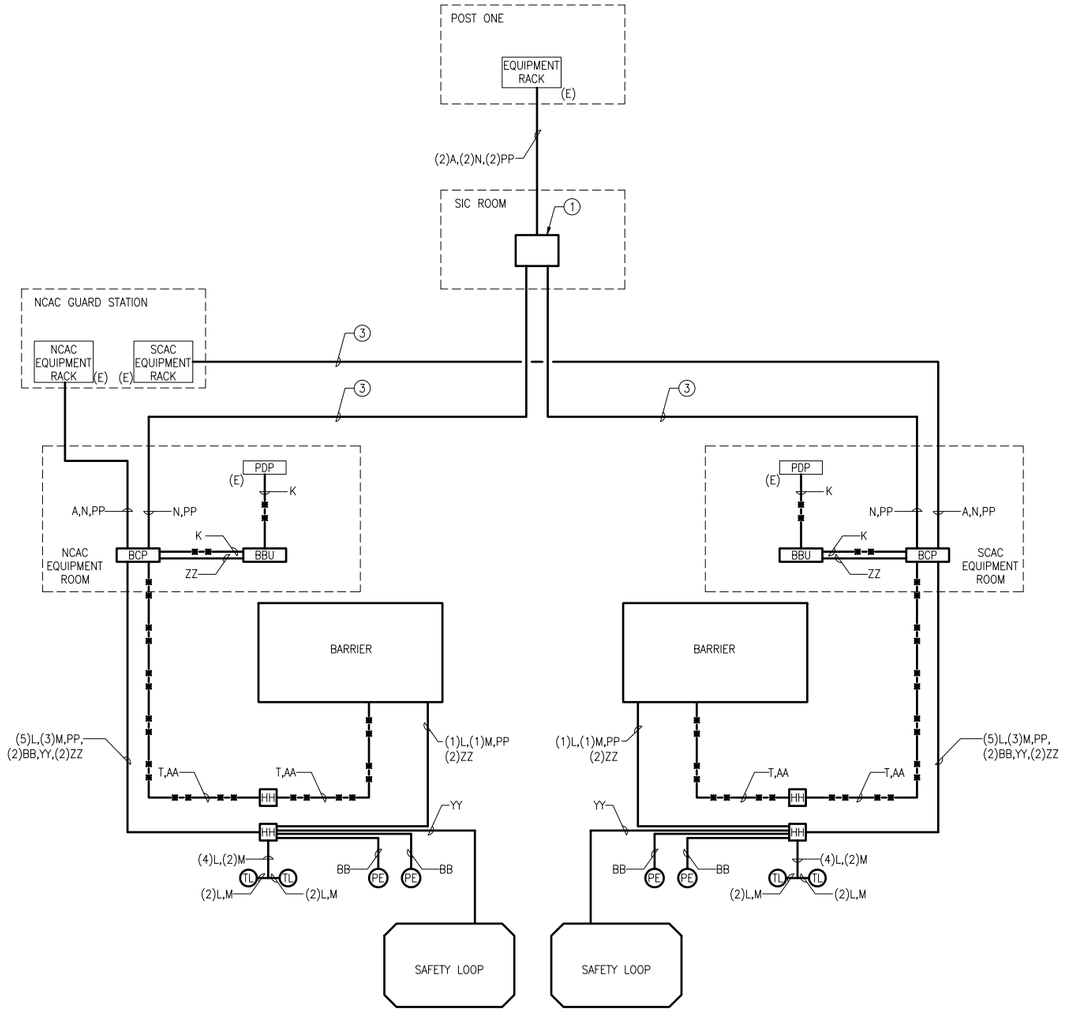

1 SY4.01 | SY4.01 BARRIER RISER DIAGRAM
SCALE: NONE

SENSITIVE BUT UNCLASSIFIED

DS/PSR/PMB
U.S. DEPT. OF STATE
5601 BACKLICK RD. SUITE 24
ALEXANDRIA, VA 22315-3700
TEL: (703)923-6621
FAX: (703)923-6622

BARRIER SYSTEM UPGRADE for COLOMBO, SRI LANKA

WARNING: This document is the property of the U.S. Government. Further reproduction and/or distribution is prohibited without the written permission of Management & Engineering & Technology, Inc. (ME&T). The U.S. Department of State, Washington, DC. 20522-0620. Information on this document is not to be altered except with the written approval of the individual who first approved the document.

DRAWING TITLE: BARRIER RISER DIAGRAM

PHASE: ☐ 30% ☐ 60% ☐ 90% ■ 100% ☐ AS-BUILT

CAD FILE NAME: CMBD401.dwg
DRAWING SCALE: NONE
PROJECT NUMBER: PME11-13-25
DRAWN BY: JB
DESIGNED BY: FG
DATE: 11/12/13
DRAWING NUMBER: SY4.01
SHEET 10 OF 24
CLASSIFICATION: SENSITIVE BUT UNCLASSIFIED
REV.

SENSITIVE BUT UNCLASSIFIED

SENSITIVE BUT UNCLASSIFIED

DRAWING KEY NOTES

1. INSTALL GROUND WIRE BETWEEN GROUND LUG IN BBU AND EXISTING GROUND SYSTEM. WHERE BBU AND BCP ARE INSTALLED OUTSIDE OF BUILDING, INSTALL (2)10'(3048mm) COPPER GROUND RODS AND CONNECT TO THE GROUND LUG IN BBU USING #6 COPPER WIRE. GROUNDING SHALL BE IN ACCORDANCE WITH LATEST EDITION OF NFPA 70, NATIONAL ELECTRICAL CODE, ART:250.

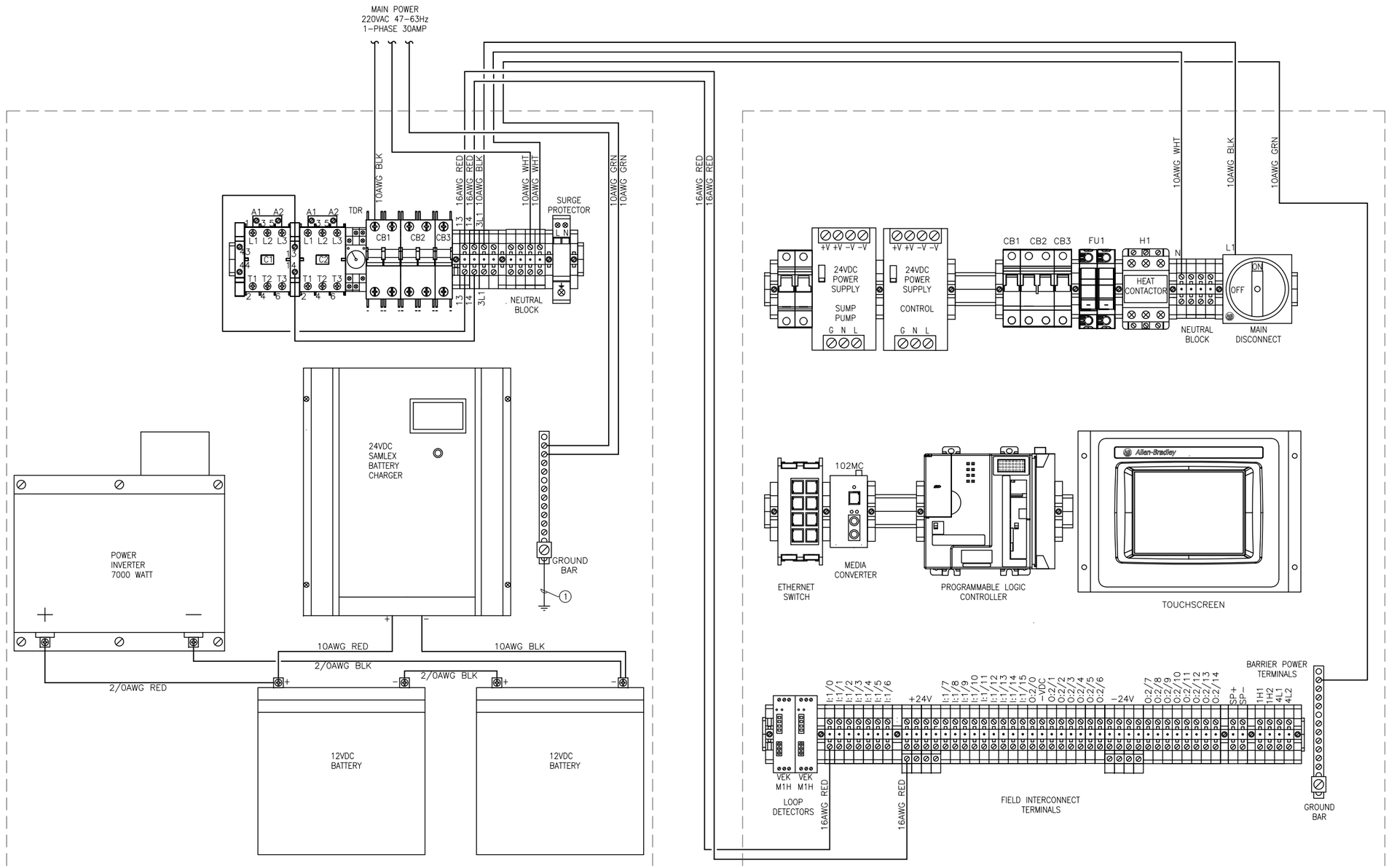

1 SY4.02 | SY4.02 BATTERY BACKUP PANEL POWER CONECTIONS

SCALE: NONE

SENSITIVE BUT UNCLASSIFIED

PROJECT MANAGEMENT & ENGINEERING ★ DIPLOMATIC SECURITY

DS/FSE/PME
U.S. DEPT. OF STATE
5800 BARCLAY DRIVE, SA-24
ALEXANDRIA, VA 22315-5700
TEL: (703)923-6601
FAX: (703)923-6802

BARRIER SYSTEM UPGRADE for COLOMBO, SRI LANKA

WARNING: This document is the property of the U.S. Government. Further reproduction and/or distribution is prohibited without the express written permission of the U.S. Department of State, Washington, DC, 20522-0620. Information on this document is not to be altered except with the written approval of the individual whose seal appears hereon.

DRAWING TITLE: BATTERY BACKUP PANEL POWER CONNECTIONS

PHASE: ☐ 30% ☐ 60% ☐ 90% ■ 100% ☐ AS-BUILT

CAD FILE NAME: CMBD402.dwg

DRAWING SCALE: NONE

PROJECT NUMBER: PME11-13-25

DRAWN BY: JB

DESIGNED BY: FG

DATE: 11/12/13

DRAWING NUMBER: SY4.02

SHEET 11 OF 24

CLASSIFICATION: SENSITIVE BUT UNCLASSIFIED

REV.

SENSITIVE BUT UNCLASSIFIED

DRAWING KEY NOTES

1. CAT 5e CABLE ROUTED THROUGH JUNCTION BOX.
2. ALL WIRE SPLICES IN JUNCTION BOX TO BE DONE WITH POWER PHASE BUTT CONNECTORS. REFER TO WIRE CONNECTOR SCHEDULE ON DRAWING SY4.01.

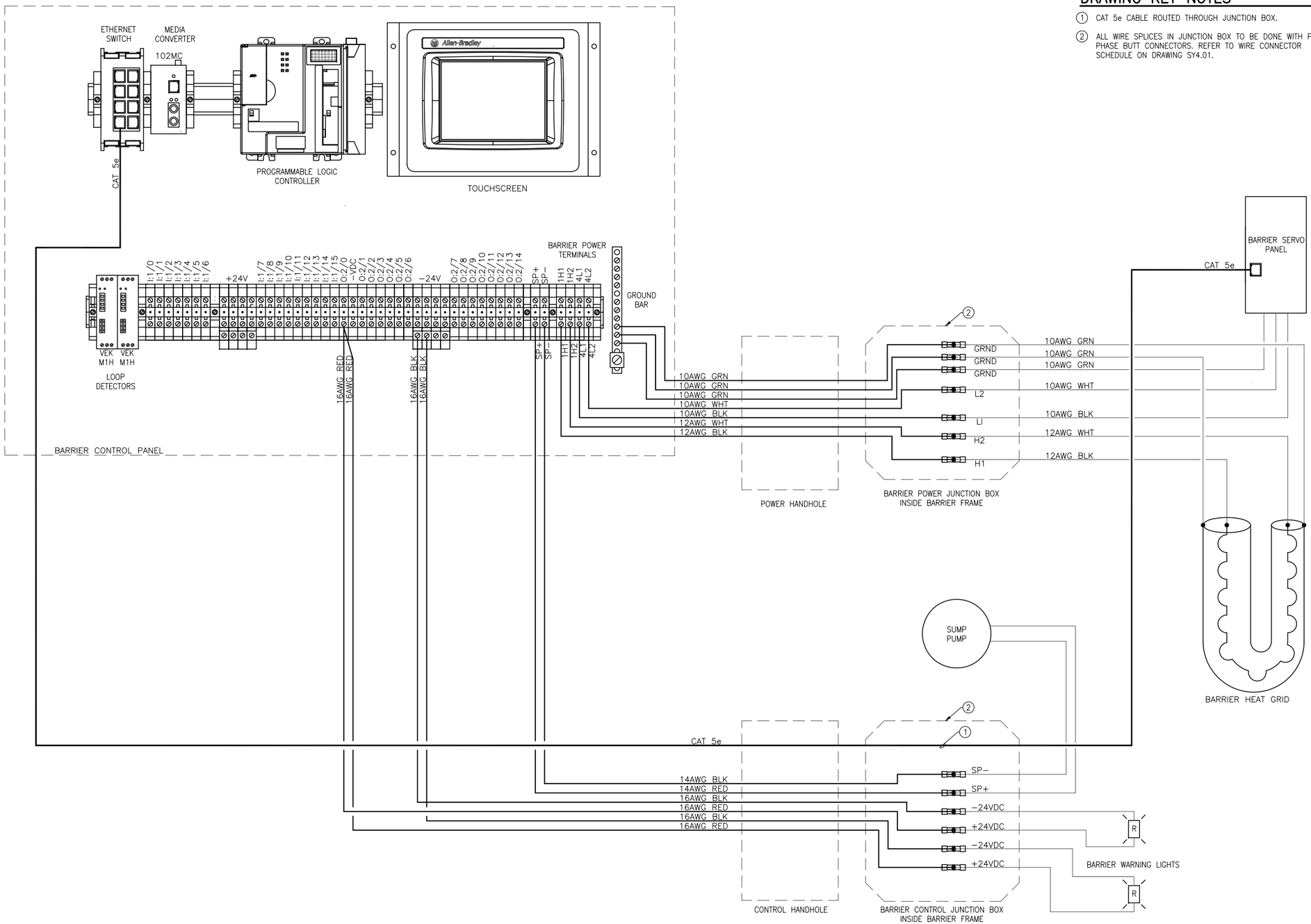

1 SY4.03 | SY4.03 BARRIER CONTROL PANEL TO BARRIER CONNECTIONS

SCALE: NONE

SENSITIVE BUT UNCLASSIFIED

PROJECT MANAGEMENT & ENGINEERING ★ AUTOMATIC SECURITY ★

DS/FSE/PME
U.S. DEPT. OF STATE
5800 BARCLAY DRIVE, SA-24
ALEXANDRIA, VA 22315-5700
TEL: (703)923-6601
FAX: (703)923-6802

BARRIER SYSTEM UPGRADE for COLOMBO, SRI LANKA

WARNING: This document is the property of the U.S. Government. Further reproduction and/or distribution is prohibited without the express written permission of the U.S. Department of State, Washington, DC, 20522-0620. Information on this document is not to be altered except with the written approval of the individual whose seal appears hereon.

DRAWING TITLE: BARRIER CONTROL PANEL TO BARRIER CONNECTIONS

PHASE: ☐ 30% ☐ 60% ☐ 90% ■ 100% ☐ AS-BUILT

CAD FILE NAME	CMBD403.dwg
DRAWING SCALE	NONE
PROJECT NUMBER	PME11-13-25
DRAWN BY	JB
DESIGNED BY	FG
DATE	11/12/13
DRAWING NUMBER	SY4.03
SHEET	12 OF 24
CLASSIFICATION	SENSITIVE BUT UNCLASSIFIED
REV.	

SENSITIVE BUT UNCLASSIFIED

DRAWING NOTES

1. ALL WIRE SPLICES TO BE DONE WITH POWER PHASE BUTT CONNECTORS.

DRAWING KEY NOTES

1. INSTALL THERMOSTAT IN WEATHERPROOF BOX MOUNTED ON STANCHION.

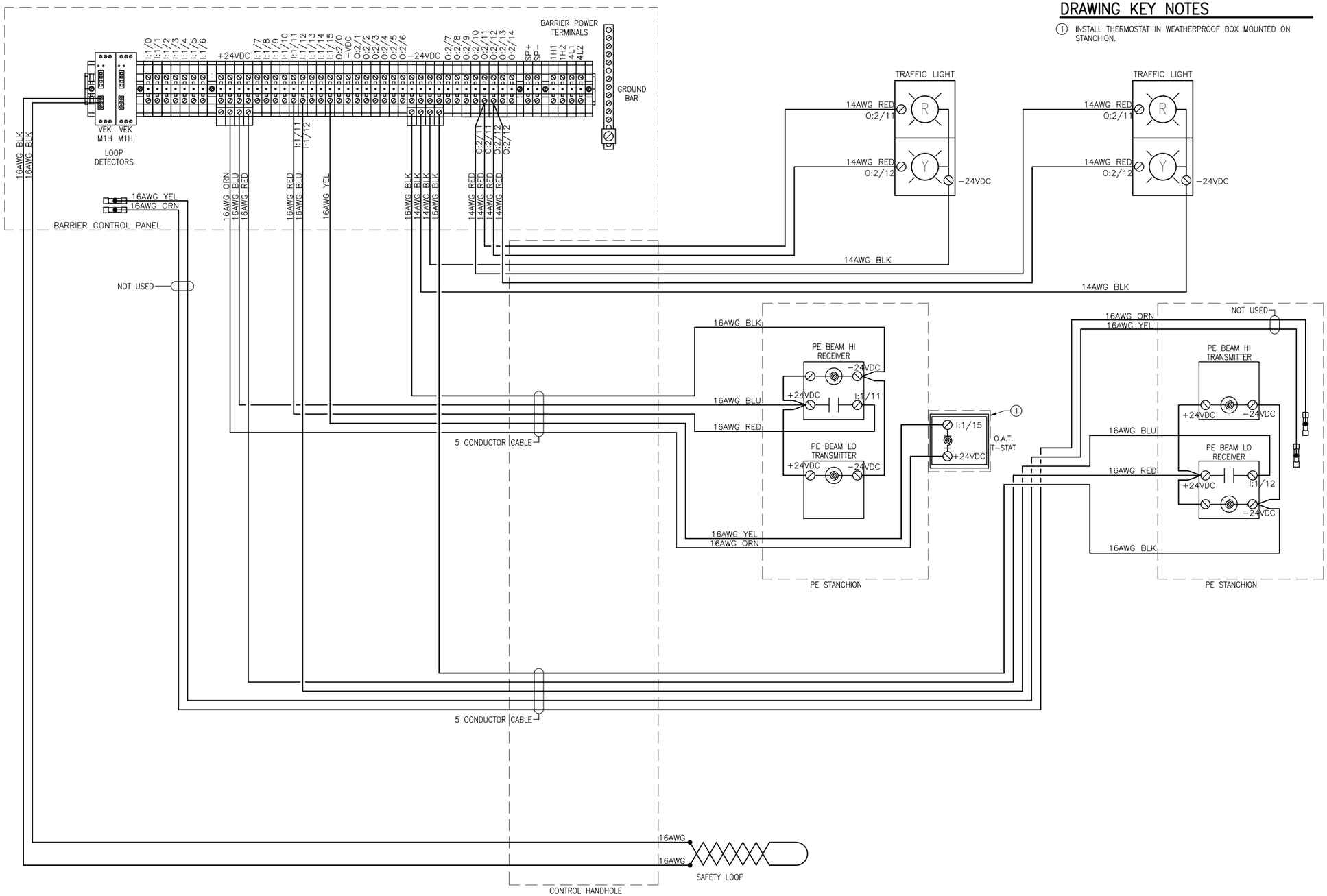

1 SY4.04 SY4.04 BARRIER CONTROL PANEL PERIPHERAL DEVICES

SCALE: NONE

SENSITIVE BUT UNCLASSIFIED

PROJECT MANAGEMENT & ENGINEERING ★ DIPLOMATIC SECURITY ★

DS/FSE/PME
U.S. DEPT. OF STATE
5800 BARCLAY DRIVE, SA-24
ALEXANDRIA, VA 22315-5700
TEL: (703)923-6601
FAX: (703)923-6802

BARRIER SYSTEM UPGRADE for COLOMBO, SRI LANKA

WARNING: This document is the property of the U.S. Government. Further reproduction and/or distribution is prohibited without the express written permission of the U.S. Department of State, Washington, DC, 20522-0620. Information on this document is not to be altered except with the written approval of the individual whose seal appears hereon.

DRAWING TITLE: BARRIER CONTROL PANEL TO PERIPHERAL DEVICES

PHASE: ☐ 30% ☐ 60% ☐ 90% ■ 100% ☐ AS-BUILT

CAD FILE NAME: CMBD404.dwg

DRAWING SCALE: NONE

PROJECT NUMBER: PME11-13-25

DRAWN BY: JB

DESIGNED BY: FG

DATE: 11/12/13

DRAWING NUMBER: SY4.04

SHEET 13 OF 24

CLASSIFICATION: SENSITIVE BUT UNCLASSIFIED

REV.

SENSITIVE BUT UNCLASSIFIED

DRAWING NOTES

1. ALL WIRE SPLICES TO BE DONE WITH POWER PHASE BUTT CONNECTORS.

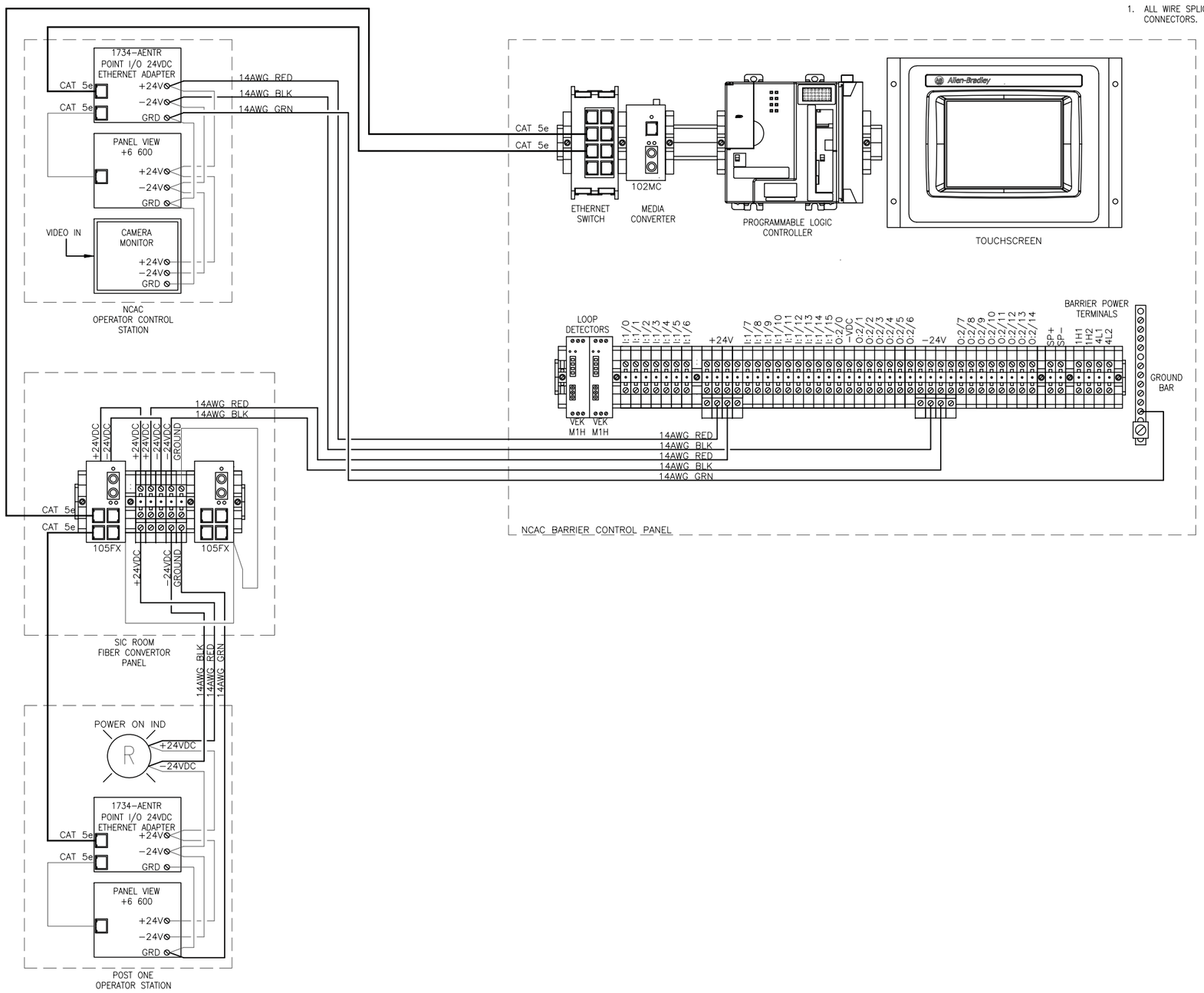

BARRIER CONTROL PANEL CONNECTIONS FROM NCAC TO POST ONE AND SIC ROOM

1 SY4.05 SY4.05 SCALE: NONE

SENSITIVE BUT UNCLASSIFIED

PROJECT MANAGEMENT & ENGINEERING ★ SECURITY ★ DIPLOMATIC

DS/FSE/PME
U.S. DEPT. OF STATE
5800 BARCLAY DRIVE, SA-24
ALEXANDRIA, VA 22315-5700
TEL: (703)923-6601
FAX: (703)923-6802

BARRIER SYSTEM UPGRADE for COLOMBO, SRI LANKA

WARNING: This document is the property of the U.S. Government. Further reproduction and/or distribution is prohibited without the express written permission of The U.S. Department of State, Washington, DC, 20522-0620. Information on this document is not to be altered except with the written approval of the individual whose seal appears hereon.

DRAWING TITLE: BARRIER CONTROL PANEL CONNECTRIONS FROM NCAC TO POST ONE AND SIC ROOM

PHASE: ☐ 30% ☐ 60% ☐ 90% ■ 100% ☐ AS-BUILT

CAD FILE NAME: CMBD405.dwg
DRAWING SCALE: NONE
PROJECT NUMBER: PME11-13-25
DRAWN BY: JB
DESIGNED BY: FG
DATE: 11/12/13
DRAWING NUMBER: SY4.05
SHEET 14 OF 24
CLASSIFICATION: SENSITIVE BUT UNCLASSIFIED
REV.

DRAWING NOTES

1. ALL WIRE SPLICES TO BE DONE WITH POWER PHASE BUTT CONNECTORS.

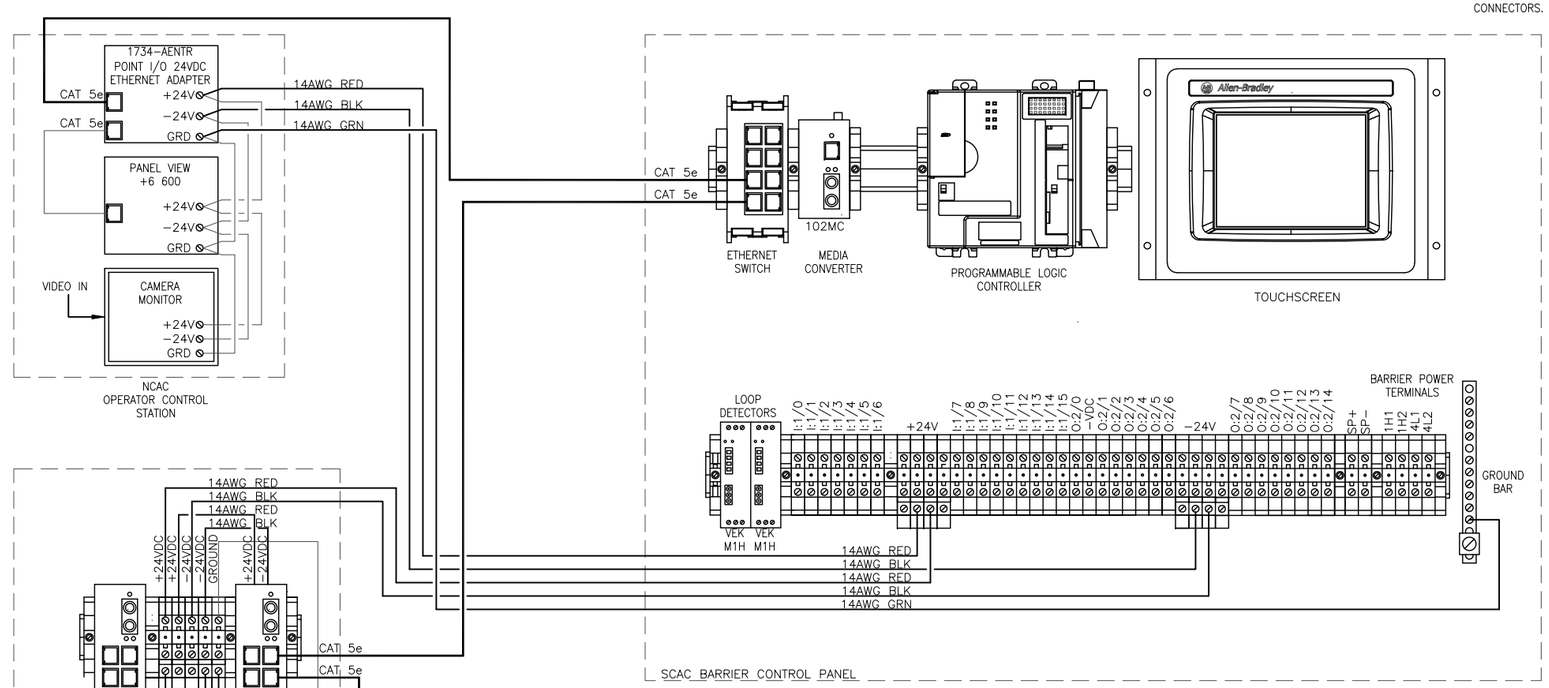

BARRIER CONTROL PANEL CONNECTIONS FROM SCAC TO POST ONE AND SIC ROOM

1 SY4.06 | SY4.06 SCALE: NONE

PROJECT MANAGEMENT & ENGINEERING ★ SECURITY ★ DIPLOMATIC
DS/FSE/PMB
U.S. DEPT. OF STATE
5801 DUKE STREET, SUITE 324
ALEXANDRIA, VA 22315-5700
TEL: (703)923-6601
FAX: (703)923-6602

BARRIER SYSTEM UPGRADE for COLOMBO, SRI LANKA

WARNING: This document is the property of the U.S. Government. Further reproduction and/or distribution is prohibited without the permission of the originator. Requests for permission to reproduce should be addressed to the U.S. Department of State, Washington, DC. 20522-0820. The U.S. Department of State assumes no liability for the contents or use of the information on this document. Information on this document is not to be altered except with the written approval of the originator. Any unauthorized alteration or use will be at the recipient's risk and the U.S. Department of State assumes no responsibility for any subsequent unauthorized use or distribution of the data on this document.

DRAWING TITLE: BARRIER CONTROL PANEL CONNECTIONS FROM SCAC TO POST ONE AND SIC ROOM

PHASE: ☐ 30% ☐ 60% ☐ 90% ■ 100% ☐ AS-BUILT

CAD FILE NAME: CMBD406.dwg

DRAWING SCALE: NONE

PROJECT NUMBER: PME11-13-25

DRAWN BY: JB

DESIGNED BY: TG

DATE: 11/12/13

DRAWING NUMBER: SY4.06

SHEET 15 OF 24

CLASSIFICATION: SENSITIVE BUT UNCLASSIFIED

REV.

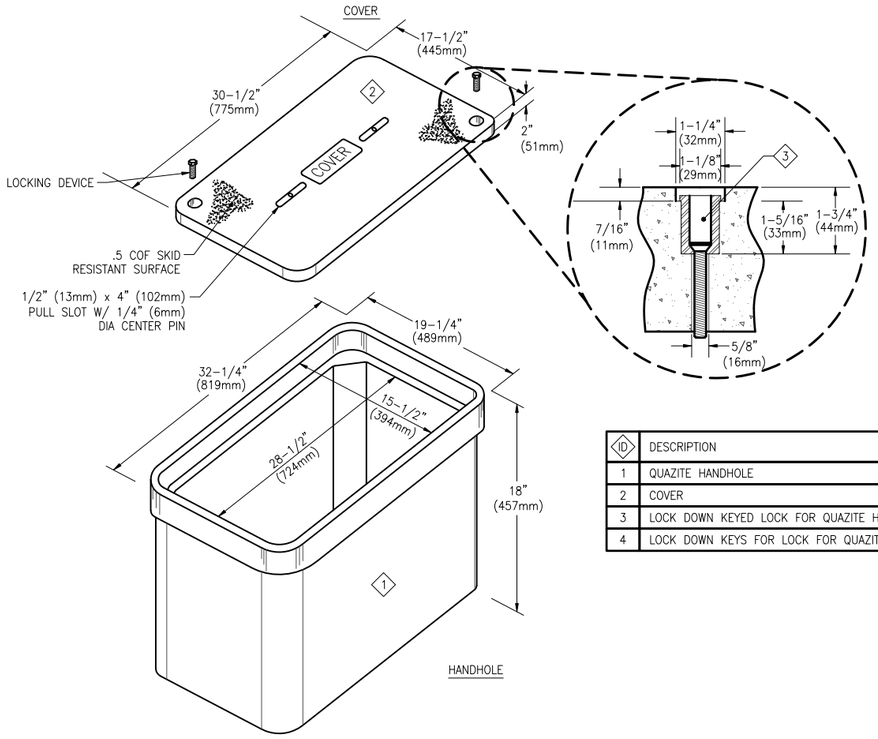

ID	DESCRIPTION
1	QUAZITE HANDHOLE
2	COVER
3	LOCK DOWN KEYED LOCK FOR QUAZITE HANDHOLE
4	LOCK DOWN KEYS FOR LOCK FOR QUAZITE HANDHOLE

1 MEDIUM QUAZITE PRE-FAB HANDHOLE DETAIL

SY5.01 SY5.01 SCALE: NONE

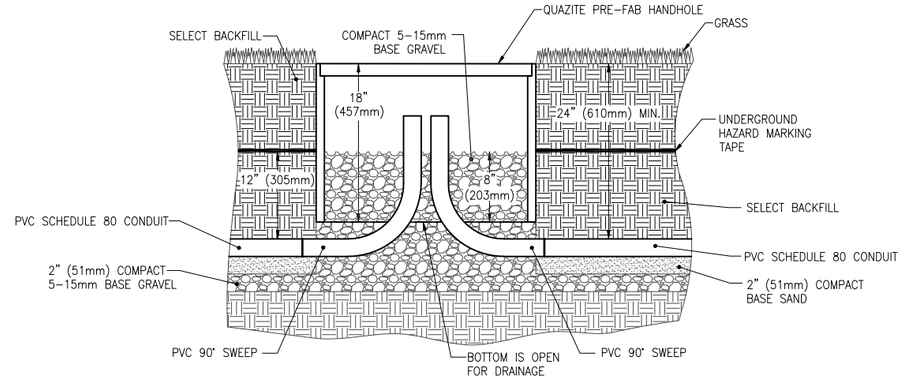

2 HANDHOLE AND CONDUIT INSTALLATION DETAIL – GRASS AREA

SY5.01 SY5.01 SCALE: NONE

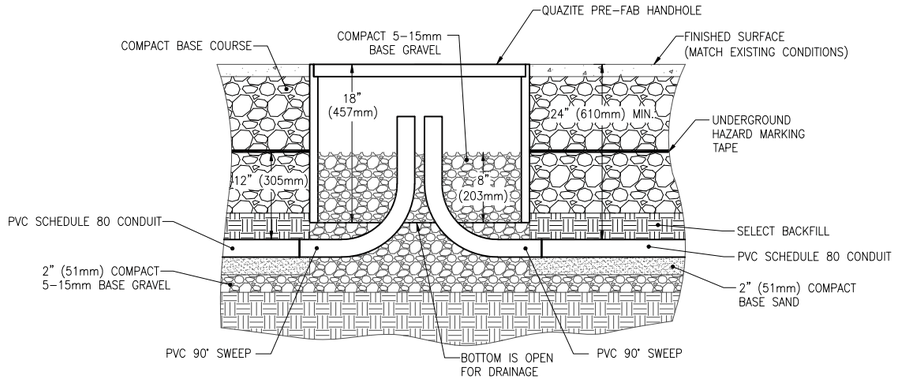

3 HANDHOLE AND CONDUIT INSTALLATION DETAIL – FINISHED ROAD/SIDEWALK

SY5.01 SY5.01 SCALE: NONE

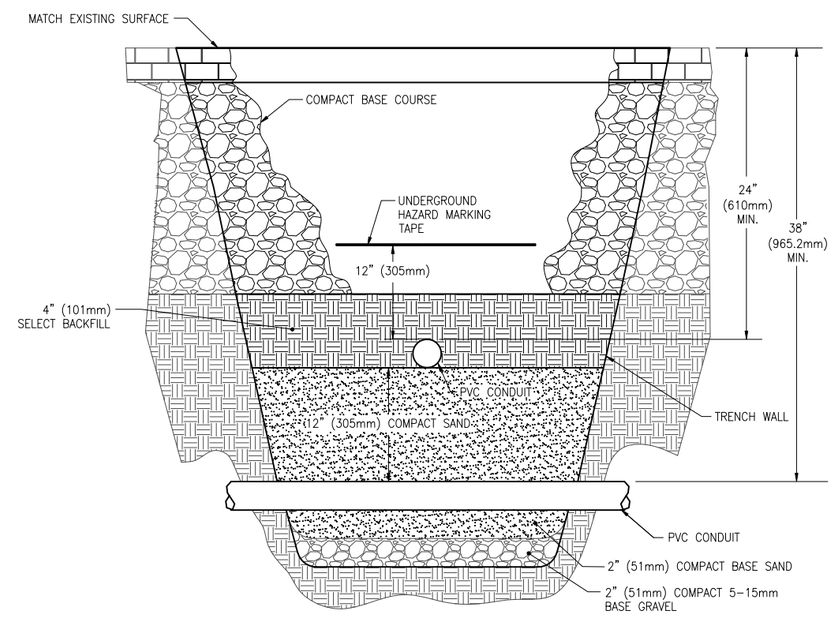

NOTES:

1. MATCH COMPACT BASE COURSE TYPE AND THICKNESS TO EXISTING.
2. THE BOTTOM MOST CONDUIT MAY SMOOTHLY TRANSITION UP TO A DEPTH OF 24" (610mm) BELOW GRADE AFTER A DISTANCE 24" (610mm) FROM THE INTERSECTION POINT.

4 INTERSECTING CONDUIT TRENCHING DETAIL

SY5.01 SY5.01 SCALE: NONE

PROJECT MANAGEMENT & ENGINEERING ★ PROTECTIVE SECURITY

DS/FSE/PME
U.S. DEPT. OF STATE
5800 BARCLAY DRIVE, SA-24
ALEXANDRIA, VA 22315-5700
TEL: (703)923-6601
FAX: (703)923-6802

BARRIER SYSTEM UPGRADE for COLOMBO, SRI LANKA

WARNING: This document is the property of the U.S. Government. Further reproduction and/or distribution is prohibited without the express written permission of The U.S. Department of State, Washington, DC, 20522-0620. Information on this document is not to be altered except with the written approval of the individual whose seal appears hereon.

DRAWING TITLE: DETAILS

PHASE: ☐ 30% ☐ 60% ☐ 90% ■ 100% ☐ AS-BUILT

CAD FILE NAME: CMBD501.dwg
DRAWING SCALE: NONE
PROJECT NUMBER: PME11-13-25
DRAWN BY: JB
DESIGNED BY: FG
DATE: 11/12/13
DRAWING NUMBER: SY5.01
SHEET 16 OF 24
CLASSIFICATION: SENSITIVE BUT UNCLASSIFIED
REV.

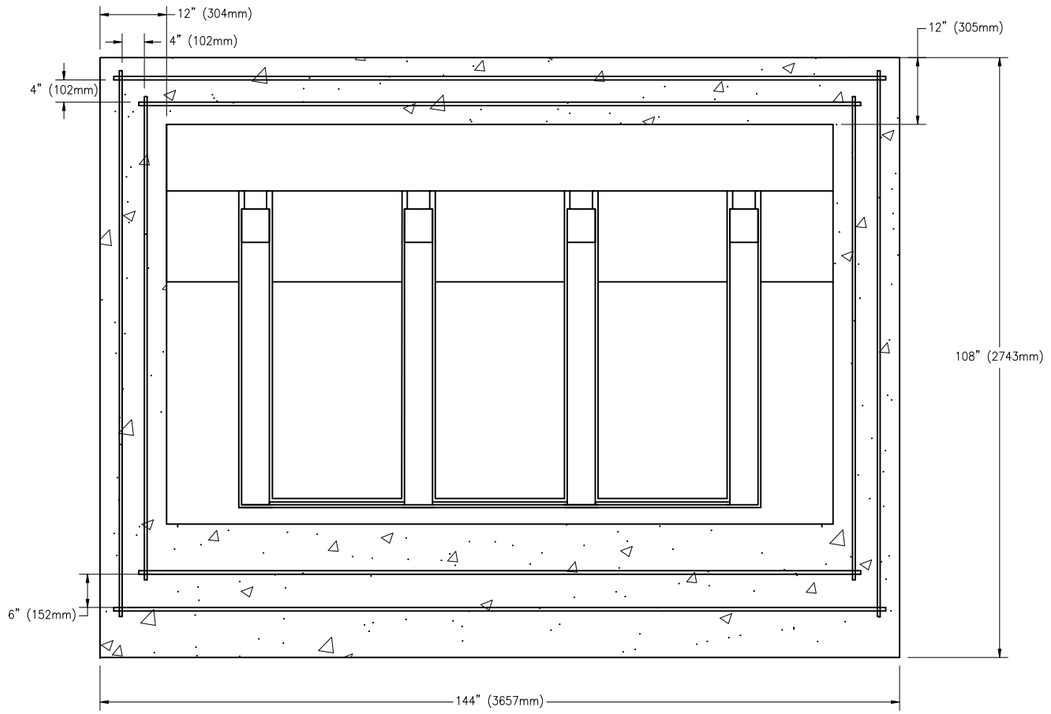

1 SY5.02 | SY5.02 RSS-2000 VEHICLE BARRIER INSTALLATION – TOP VIEW
SCALE: NONE

DRAWING NOTES

1. EXCAVATE 9' x 12' x 2' (2700mm x 3600mm x 600mm) PIT.
2. COMPACT SOIL TO 95% OR PER LOCAL SPECS.
3. POSITION BARRIER IN EXCAVATION.
4. CONNECT NATURAL DRAINS (IF APPLICABLE)
5. CONNECT CONDUIT CONNECTIONS (ELECTRIC, CONTROLS AND SUMP PUMP).
6. POSITION #5 REBAR [APPROX. 100' (30,000mm)].
7. POUR APPROX. 4 YARDS CONCRETE (3000 PSI MINIMUM).
8. SET VEHICLE BARRIER 1/2" (12.5mm) ABOVE EXISTING ROADWAY THEN TAPER CONCRETE FOR SMOOTH TRANSITION.
9. BARRIER WEIGHT 6,720 POUNDS WITH HEAT 7,620 POUNDS.

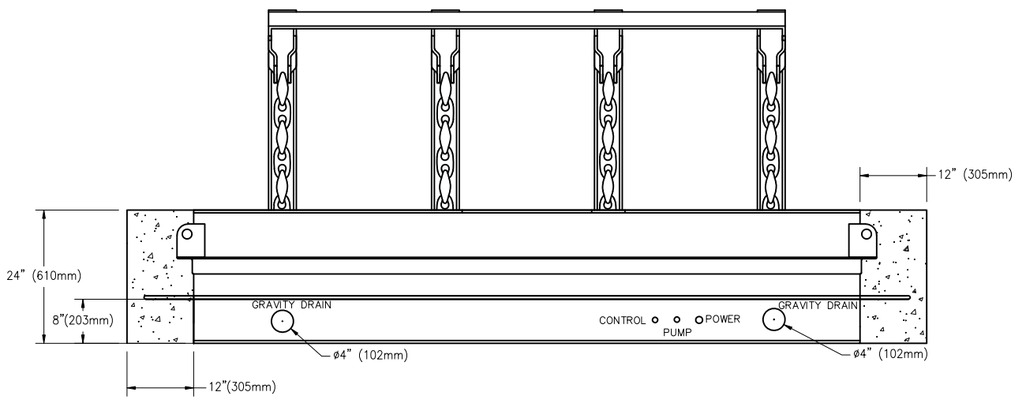

2 SY5.02 | SY5.02 RSS-2000 VEHICLE BARRIER INSTALLATION – FRONT VIEW
SCALE: NONE

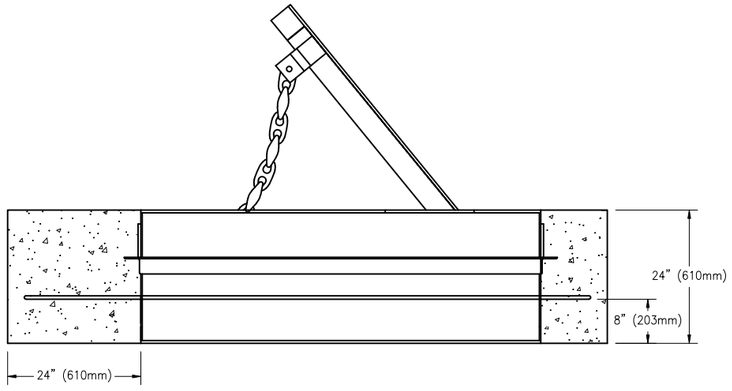

3 SY5.02 | SY5.02 RSS-2000 VEHICLE BARRIER INSTALLATION – SIDE VIEW
SCALE: NONE

PROJECT MANAGEMENT & ENGINEERING ★ SECURITY ★ DIPLOMATIC
U.S. DEPARTMENT OF STATE
DS/PSP/PME
9800 BARTLAY DRIVE, SL-24
ALEXANDRIA, VA 22315-5700
TEL: (703)923-6600
FAX: (703)923-6602

BARRIER SYSTEM UPGRADE for COLOMBO, SRI LANKA

WARNING: This document is the property of the U.S. Government. Further reproduction and/or distribution is prohibited without the express written permission of the U.S. Department of State, Washington, DC, 20522-0620. The unauthorized release of this document may result in prosecution of the individual whose seal appears hereon.

DRAWING TITLE: DETAILS

PHASE: ☐ AS-BUILT ■ 100% ☐ 90% ☐ 60% ☐ 30%

CAD FILE NAME: CMBD502.dwg
DRAWING SCALE: NONE
PROJECT NUMBER: PME11-13-25
DRAWN BY: JB
DESIGNED BY: FG
DATE: 11/12/13
DRAWING NUMBER: SY5.02
SHEET 17 OF 24
CLASSIFICATION: SENSITIVE BUT UNCLASSIFIED
REV.

ID	DESCRIPTION	CATALOG #	QTY
1	SQUARE PEDESTAL ALUMINUM BASE	PB-53XX	2
2	PEDESTAL POLE, 4" - 8 NPT	PB-52XX	2
3	1/2-13 X 1-1/2"(38mm) HEX HEAD BOLT	-	8
4	1/2-13 THREAD CONCRETE INSERT	-	8
5	1/2"(12mm) LOCK WASHER	-	8
6	1/2"(12mm) FLAT WASHER	-	8

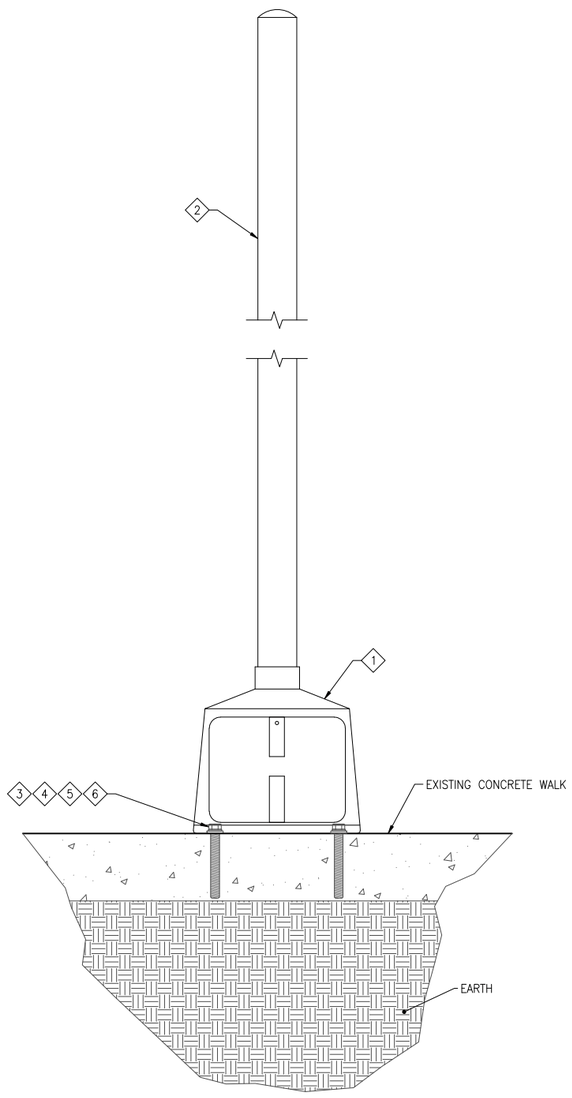

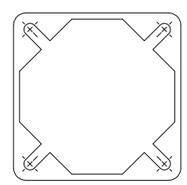

INTERIOR VIEW OF BASE ASSEMBLY

1 SY5.03 SY5.03 TRAFFIC LIGHT POLE INSTALLATION DETAIL
SCALE: NONE

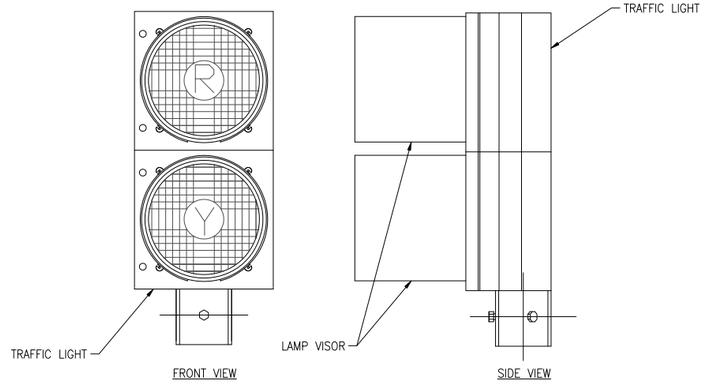

FRONT VIEW

SIDE VIEW

2 SY5.03 SY5.03 TRAFFIC LIGHT INSTALLATION DETAIL
SCALE: NONE

PROJECT MANAGEMENT & ENGINEERING ★ DIPLOMATIC SECURITY

DS/FSE/PME
U.S. DEPT. OF STATE
5800 BARCLAY DRIVE, SA-24
ALEXANDRIA, VA 22315-5700
TEL: (703)923-6601
FAX: (703)923-6802

BARRIER SYSTEM
UPGRADE
for
COLOMBO, SRI LANKA

WARNING: This document is the property of the U.S. Government. Further reproduction and/or distribution is prohibited without the express written permission of The U.S. Department of State, Washington, DC, 20522-0620. Information on this document is not to be referred except with the written approval of the individual whose seal appears hereon.

DRAWING TITLE: DETAILS

PHASE: ☐ 30% ☐ 60% ☐ 90% ■ 100% ☐ AS-BUILT

CAD FILE NAME: CMBD503.dwg
DRAWING SCALE: NONE
PROJECT NUMBER: PME11-13-25
DRAWN BY: JB
DESIGNED BY: FG
DATE: 11/12/13
DRAWING NUMBER: SY5.03
SHEET 18 OF 24
CLASSIFICATION: SENSITIVE BUT UNCLASSIFIED
REV.

ID	DESCRIPTION	CATALOG #	QTY
1	TRAILING LOOP	–	1
2	RSS-2000 BARRIER	–	1
3	1"(25mm) PVC SCHEDULE 80 CONDUIT	–	AR

DRAWING KEY NOTES

1. TOP OF LOOP TO BE A MINIMUM OF 1"(25mm) BELOW SURFACE OF ROAD.

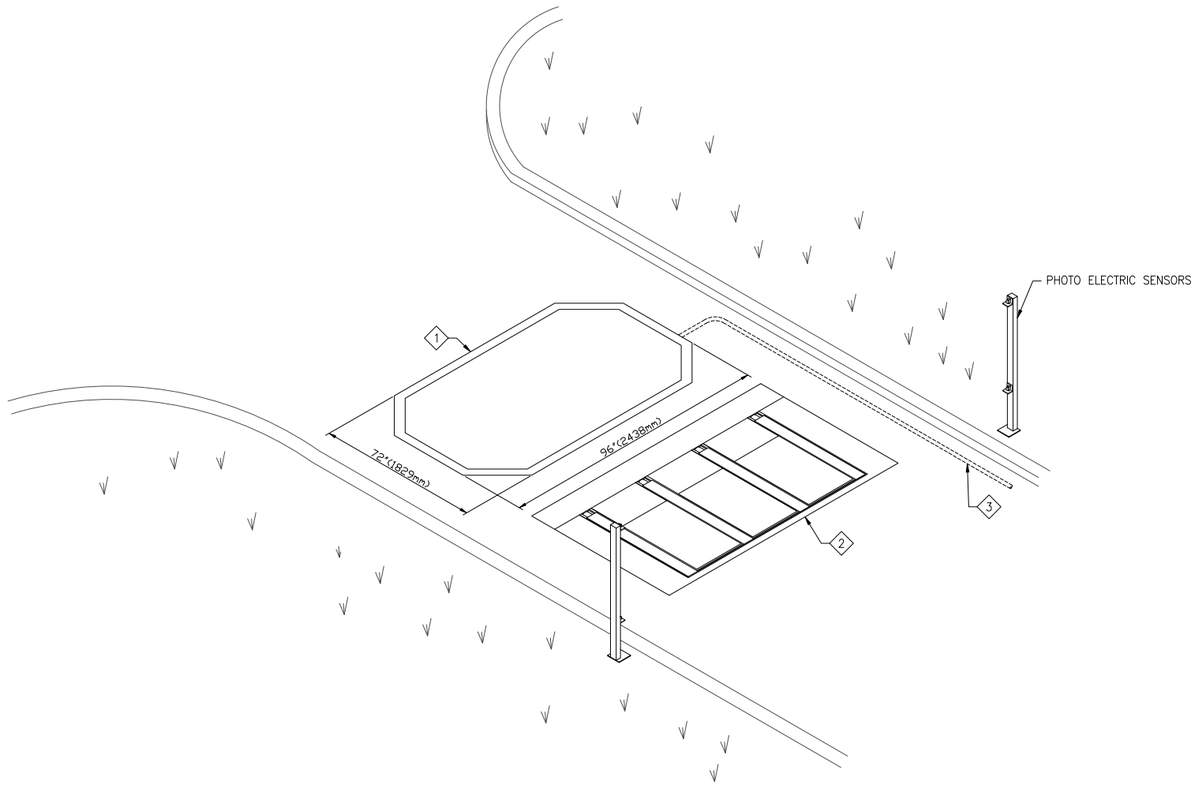

1 SY5.04 SY5.04 SAFETY LOOP INSTALLATION DETAIL
SCALE: NONE

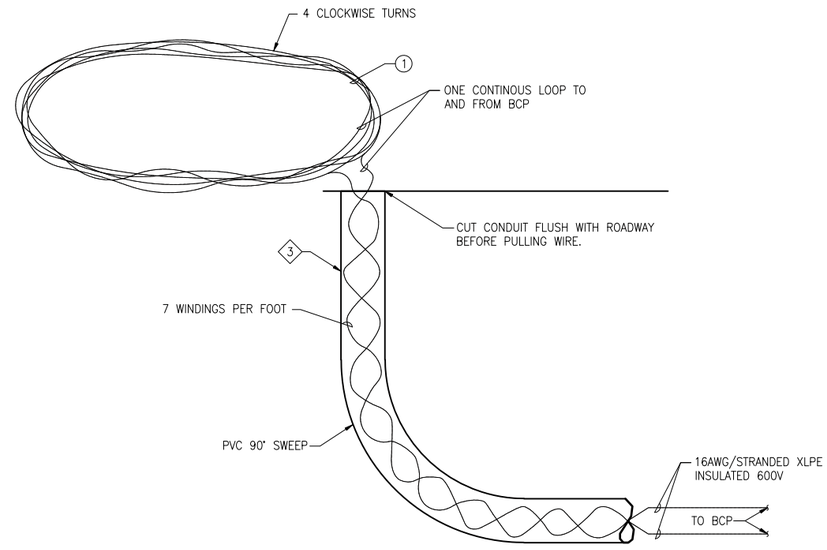

2 SY5.04 SY5.04 WIRING INSTALLATION DETAIL
SCALE: NONE

PROJECT MANAGEMENT & ENGINEERING ★ DIPLOMATIC SECURITY ★
DS/FSE/PME
U.S. DEPT. OF STATE
5800 BARCLAY DRIVE, SA-24
ALEXANDRIA, VA 22315-5700
TEL: (703)923-6601
FAX: (703)923-6802

BARRIER SYSTEM UPGRADE for COLOMBO, SRI LANKA

WARNING: This document is the property of the U.S. Government. Further reproduction and/or distribution is prohibited without the express written permission of The U.S. Department of State, Washington, DC, 20522-0620. Information on this document is not to be altered except with the written approval of the individual whose seal appears hereon.

DRAWING TITLE: DETAILS

PHASE: ☐ 30% ☐ 60% ☐ 90% ■ 100% ☐ AS-BUILT

CAD FILE NAME: CMBD504.dwg
DRAWING SCALE: NONE
PROJECT NUMBER: PME11-13-25
DRAWN BY: JB
DESIGNED BY: FG
DATE: 11/12/13
DRAWING NUMBER: SY5.04
SHEET 19 OF 24
CLASSIFICATION: SENSITIVE BUT UNCLASSIFIED
REV.

DRAWING NOTES

1. EACH IR DETECTOR MOUNTING POST SHALL BE CONFIGURED WITH ONE RECEIVER AND ONE TRANSMITTER. THE RECEIVERS AND TRANSMITTERS SHALL BE POSITIONED SO THAT A RECEIVER IS DIRECTLY OPPOSITE OF A TRANSMITTER WHEN THEY ARE INSTALLED.

ID	DESCRIPTION	CATALOG #	QTY
1	PE SENSOR TRANSMITTER	QS30EQX	2
2	PE SENSOR RECEIVER	QS30ARXQ	2
3	PE SENSOR MOUNTING BRACKET	SMB30MM	4
4	PE DETECTOR STAND WITH BASE PLATE	2888	2
5	5 PIN M12 CONNECTOR (MALE)	–	4
6	RED HEAD SLEEVE ANCHOR (5 PACK)	2G524	1
7	5 PIN M12 CONNECTOR	–	4

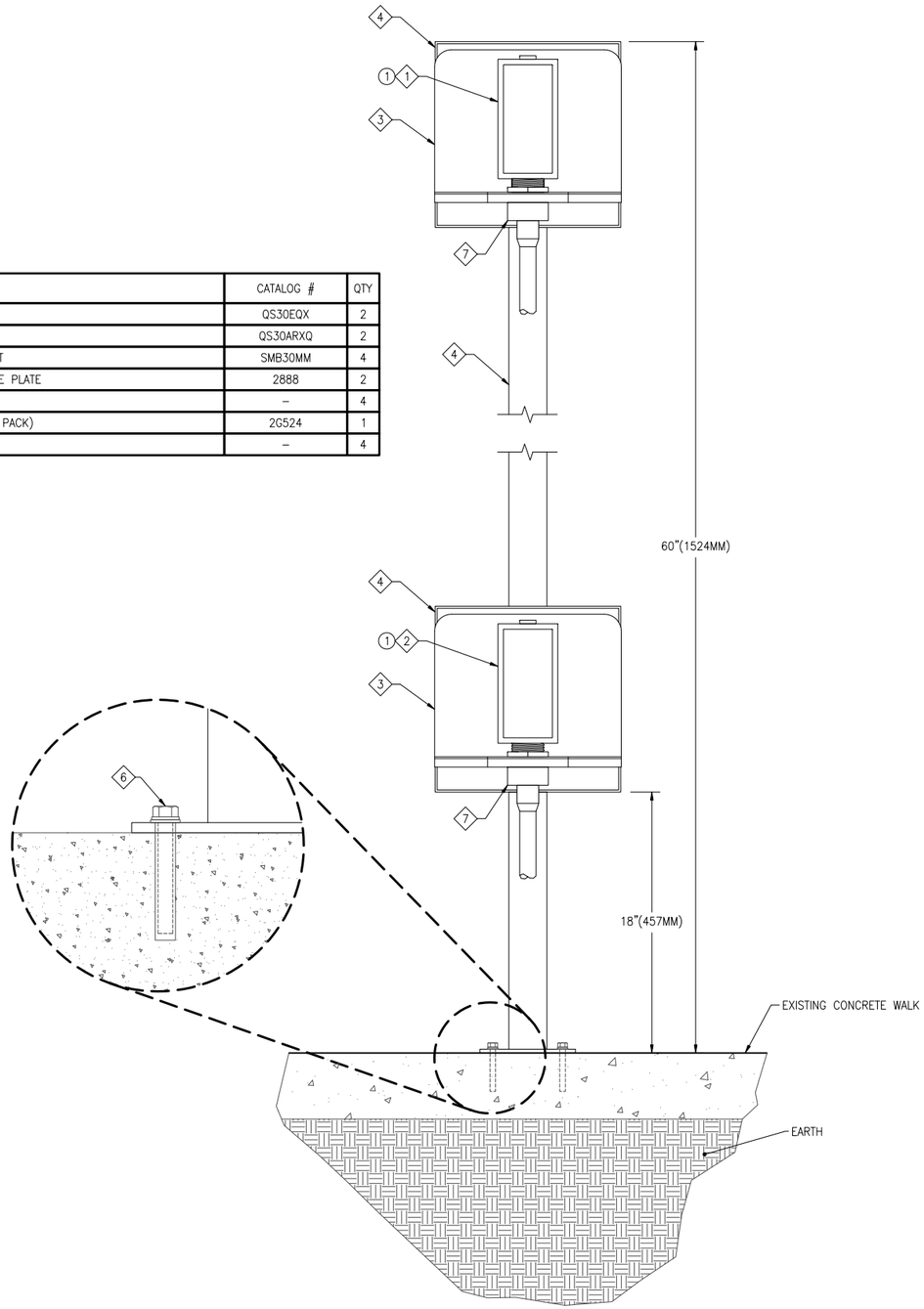

1 SY5.05 SY5.05 PE MOUNTING POST DETAIL
SCALE: NONE

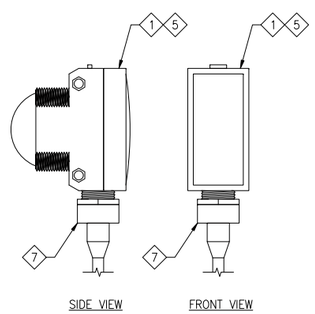

2 SY5.05 SY5.05 PE SENSOR DETAIL
SCALE: NONE

PROJECT MANAGEMENT & ENGINEERING ★ PROTOCOLLO ★ SECURITY
DS/FSE/PME
U.S. DEPT. OF STATE
5800 BARCLAY DRIVE, SA-24
ALEXANDRIA, VA 22315-5700
TEL: (703)923-6601
FAX: (703)923-6802

BARRIER SYSTEM UPGRADE for COLOMBO, SRI LANKA

WARNING: This document is the property of the U.S. Government. Further reproduction and/or distribution is prohibited without the express written permission of The U.S. Department of State, Washington, DC, 20522-0620. Information on this document is not to be offered except with the written approval of the individual whose seal appears hereon.

DRAWING TITLE: DETAILS

PHASE: ☐ 30% ☐ 60% ☐ 90% ■ 100% ☐ AS-BUILT

CAD FILE NAME: CMBD505.dwg
DRAWING SCALE: NONE
PROJECT NUMBER: PME11-13-25
DRAWN BY: JB
DESIGNED BY: FG
DATE: 11/12/13
DRAWING NUMBER: SY5.05
SHEET 20 OF 24
CLASSIFICATION: SENSITIVE BUT UNCLASSIFIED
REV.

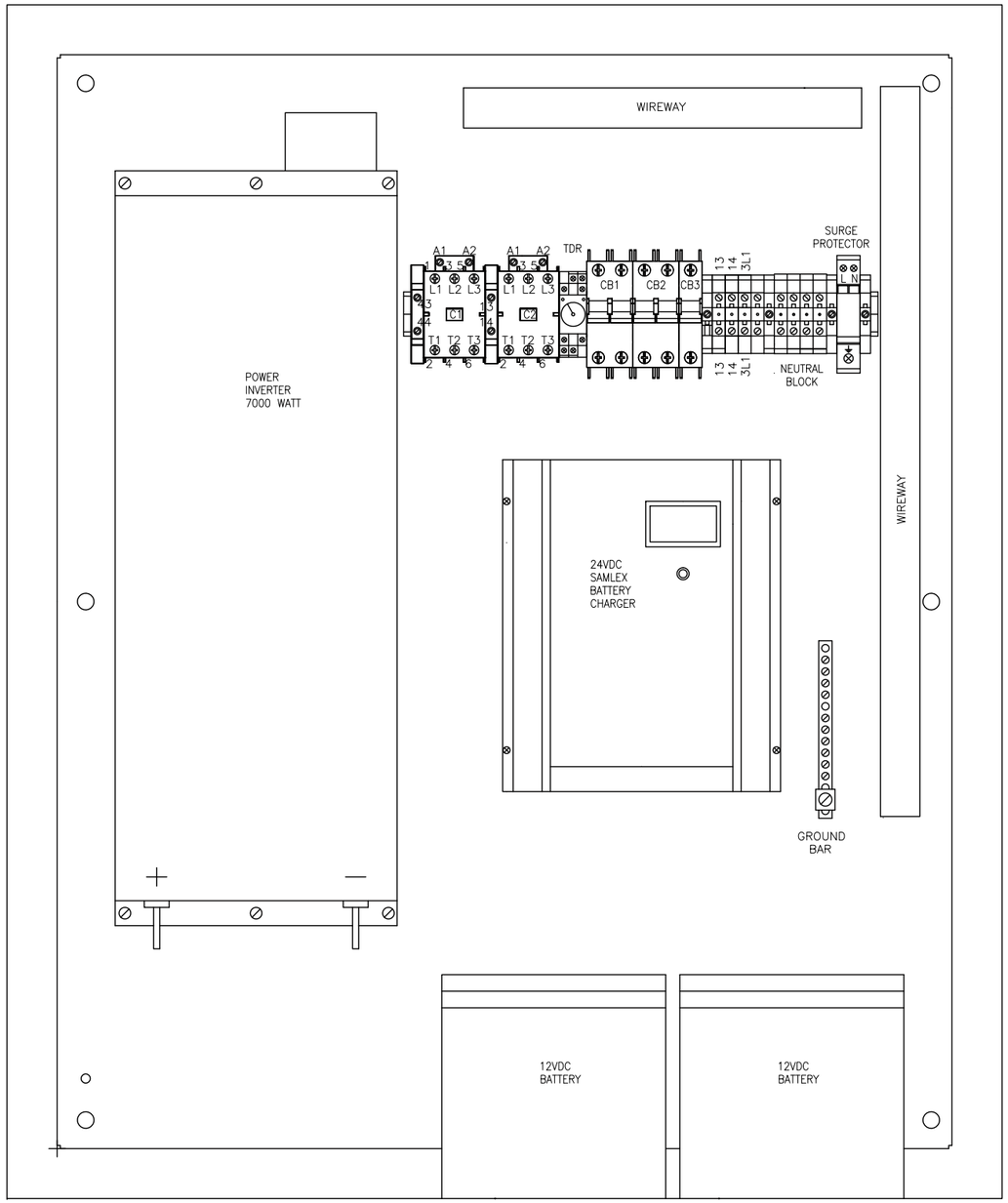

1 SY5.06 SY5.06 BATTERY BACKUP PANEL – DETAIL

SCALE: NONE

SENSITIVE BUT UNCLASSIFIED

DS/FSE/PME
U.S. DEPT. OF STATE
5601 COLUMBIA PIKE, NE-24
ALEXANDRIA, VA 22315-5700
TEL: (703)923-6601
FAX: (703)923-6602

BARRIER SYSTEM
UPGRADE
for
COLOMBO, SRI LANKA

WARNING: This document is the property of the U.S. Government. Further reproduction and/or distribution is prohibited without the written permission of the Department of State. The U.S. Department of State, Washington, DC. 20522-0620. Information on this document is not to be altered except with the written approval of the individual whose name appears thereon.

DRAWING TITLE: BATTERY BACKUP PANEL - DETAIL

PHASE: ☐ 30% ☐ 60% ☐ 90% ■ 100% ☐ AS-BUILT

CAD FILE NAME: CMBD506.dwg

DRAWING SCALE: NONE

PROJECT NUMBER: PME11-13-25

DRAWN BY: JB

DESIGNED BY: FG

DATE: 11/12/13

DRAWING NUMBER: SY5.06

SHEET 21 OF 24

CLASSIFICATION: SENSITIVE BUT UNCLASSIFIED

REV.

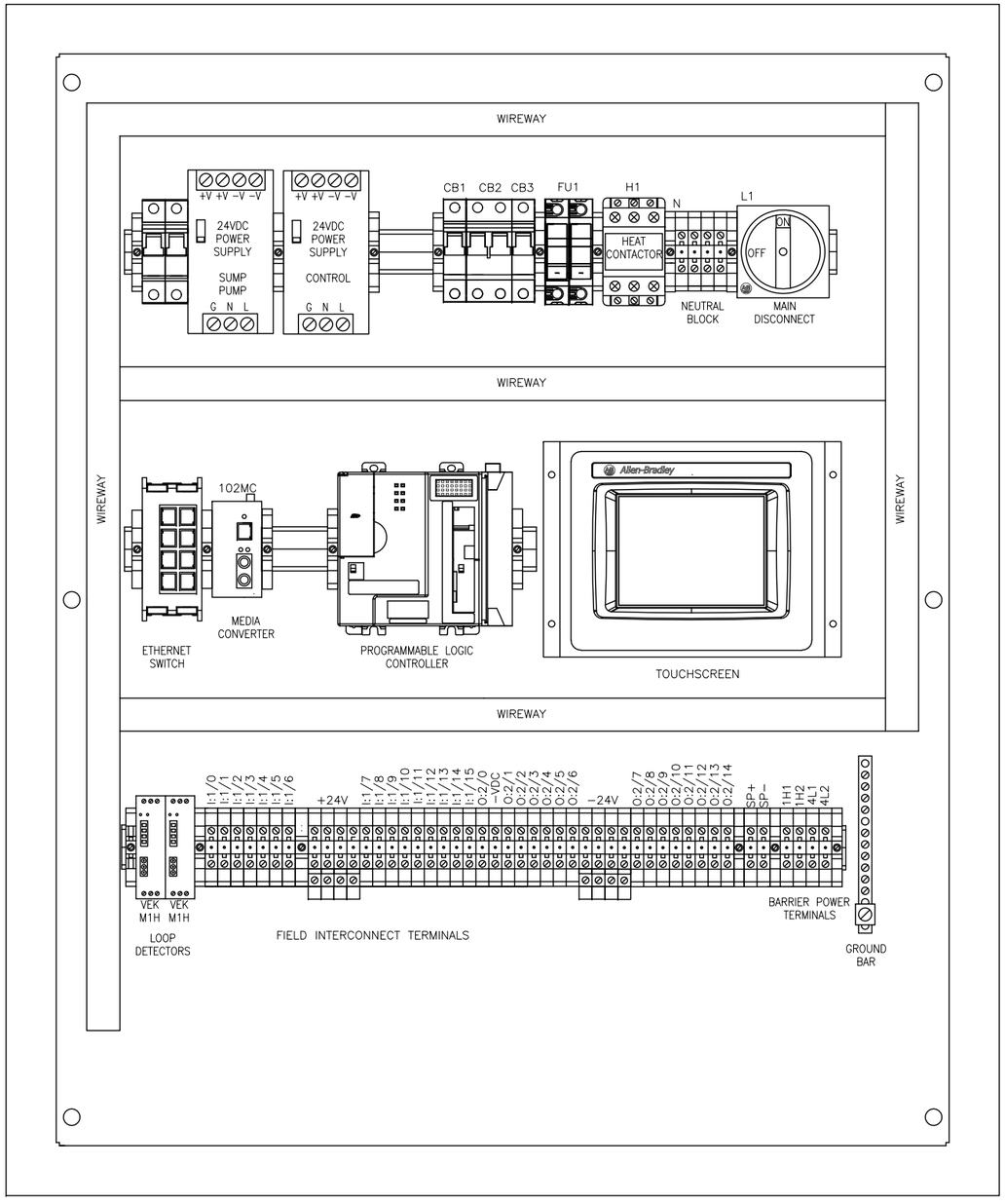

1 SY5.07 | SY5.07 BARRIER CONTROL PANEL – DETAIL

SCALE: NONE

PROJECT MANAGEMENT & ENGINEERING ★ DIPLOMATIC SECURITY

DS/FSE/PME
U.S. DEPT. OF STATE
5800 BARCLAY DRIVE, SA-24
ALEXANDRIA, VA 22315-5700
TEL: (703)923-6601
FAX: (703)923-6802

BARRIER SYSTEM UPGRADE for COLOMBO, SRI LANKA

WARNING: This document is the property of the U.S. Government. Further reproduction and/or distribution is prohibited without the express written permission of The U.S. Department of State, Washington, DC, 20522-0620. Information on this document is not to be altered except with the written approval of the individual whose seal appears hereon.

DRAWING TITLE: BARRIER CONTROL PANEL – DETAIL

PHASE: ☐ 30% ☐ 60% ☐ 90% ■ 100% ☐ AS-BUILT

CAD FILE NAME: CMBD507.dwg

DRAWING SCALE: NONE

PROJECT NUMBER: PME11-13-25

DRAWN BY: JB

DESIGNED BY: FG

DATE: 11/12/13

DRAWING NUMBER: SY5.07

SHEET 22 OF 24

CLASSIFICATION: SENSITIVE BUT UNCLASSIFIED

REV.

DRAWING KEY NOTES

1 REMOVE 3 PHASE BREAKER FEEDING HPU.

PANELBOARD SCHEDULE (DEMOLITION) NCAC

MANUFACTURER	MODEL	BREAKER TYPE	POSITIONS	MAIN BUS
GE	GE-HI-BREAK	THED	42	3 PHASE 230/400V

	PHASE	LOAD	AWG	TRIP	POLE	CKT #	CKT #	POLE	TRIP	AWG	LOAD	PHASE
	A											
	B	MAIN	3	100	3	–						
	C											
	A	MC-HPU-1	12	20	1	1	2	3	30	10	TVSS	A
	B	SPARE	–	35	1	3	4	–	–	–	–	B
	C	MC-SF-1	12	20	1	5	6	–	–	–	–	C
	A	MC-EF-1	12	20	1	7	8	3	30	10	MC-HPU-2	A
	B	EWH-3	12	20	1	9	10	–	–	–	–	B
	C	SPARE	–	20	1	11	12	–	–	–	–	C
	A	SPARE	–	20	1	13	14	–	–	–	SPARE	A
	B	SPARE	–	20	1	15	16	–	–	–	SPARE	B
	C	SPARE	–	20	1	17	18	–	–	–	SPARE	C
	A	SPARE	–	20	1	19	20	1	20	12	MOTORIZED GATE	A
1	B	NCAC-BARRIER HYD. UNIT	6	50	3	21	22	1	20	12	MOTORIZED GATE	B
1	C	–	–	–	–	23	24	1	20	–	SPARE	C
1	A	–	–	–	–	25	26	3	100	6	SCAC-DIN RAIL PANEL	A
	B	SPARE	–	20	1	27	28	–	–	–	–	B
	C	SPARE	–	20	1	29	30	–	–	–	–	C

PROJECT MANAGEMENT & ENGINEERING ★ DIPLOMATIC SECURITY
DS/FSE/PME
U.S. DEPT. OF STATE
5800 BARCLAY DRIVE, SA-24
ALEXANDRIA, VA 22315-5700
TEL: (703)923-6601
FAX: (703)923-6802

BARRIER SYSTEM UPGRADE for COLOMBO, SRI LANKA

WARNING: This document is the property of the U.S. Government. Further reproduction and/or distribution is prohibited without the express written permission of The U.S. Department of State, Washington, DC, 20522-0620. Information on this document is not to be altered except with the written approval of the individual whose seal appears hereon.

DRAWING TITLE: SCHEDULES

PHASE: ☐ 30% ☐ 60% ☐ 90% ■ 100% ☐ AS-BUILT

CAD FILE NAME: CMBD601.dwg
DRAWING SCALE: NONE
PROJECT NUMBER: PME11-13-25
DRAWN BY: JB
DESIGNED BY: FG
DATE: 11/12/13
DRAWING NUMBER: SY6.01
SHEET 23 OF 24
CLASSIFICATION: SENSITIVE BUT UNCLASSIFIED
REV.

DRAWING KEY NOTES

1. INSTALL NEW SINGLE PHASE 30 AMP CIRCUIT BREAKER.
2. INSTALL NEW PANEL CIRCUIT BREAKER BLANK.
3. INSTALL NEW HAGER-MY-132 CIRCUIT BREAKER.
4. INSTALL NEW NEUTRAL BLOCK TO CONNECT BARRIER NEUTRAL TO.

PANELBOARD SCHEDULE (NEW WORK) NCAC

MANUFACTURER	MODEL	BREAKER TYPE	POSITIONS	MAIN BUS
GE	GE-HI-BREAK	THED	42	3 PHASE 230/400V

	PHASE	LOAD	AWG	TRIP	POLE	CKT #	CKT #	POLE	TRIP	AWG	LOAD	PHASE
	A											
	B	MAIN	3	100	3	–						
	C											
	A	MC-HPU-1	12	20	1	1	2	3	30	10	TVSS	A
	B	SPARE	–	35	1	3	4	–	–	–	–	B
	C	MC-SF-1	12	20	1	5	6	–	–	–	–	C
	A	MC-EF-1	12	20	1	7	8	3	30	10	MC-HPU-2	A
	B	EWH-3	12	20	1	9	10	–	–	–	–	B
	C	SPARE	–	20	1	11	12	–	–	–	–	C
	A	SPARE	–	20	1	13	14	–	–	–	SPARE	A
	B	SPARE	–	20	1	15	16	–	–	–	SPARE	B
	C	SPARE	–	20	1	17	18	–	–	–	SPARE	C
	A	SPARE	–	20	1	19	20	1	20	12	MOTORIZED GATE	A
1	B	RSSI BARRIER CONTROL UNIT	10	30	1	21	22	1	20	12	MOTORIZED GATE	B
2	C	BLANK	–	–	–	23	24	1	20	–	SPARE	C
2	A	BLANK	–	–	–	25	26	3	100	6	SCAC-DIN RAIL PANEL	A
	B	SPARE	–	20	1	27	28	–	–	–	–	B
	C	SPARE	–	20	1	29	30	–	–	–	–	C

4 BREAKER ENCLOSURE (NEW WORK) SCAC

MANUFACTURER	MODEL	BREAKER TYPE	POSITIONS	MAIN BUS
HAGER	MY-340E-40	HAGER	10	3 PHASE 230/400V

	PHASE	LOAD	AWG	TRIP	POLE	CKT #	CKT #	POLE	TRIP	AWG	LOAD	PHASE
	A											
	B	MAIN	3	100	3	–						
	C											
3	A	RSSI BARRIER UNIT	10	32	1	1	2	–	–	–	–	A
	B	–	–	–	–	3	4	–	–	–	–	B
	C	–	–	–	–	5	6	–	–	–	–	C
	A	SPARE	8	40	2	7	8	–	–	–	–	A
	B	–	–	–	–	9	10	–	–	–	–	B

PROJECT MANAGEMENT & ENGINEERING ★ DIPLOMATIC SECURITY
DS/FSE/PME
U.S. DEPT. OF STATE
5800 BARCLAY DRIVE, SA-24
ALEXANDRIA, VA 22315-5700
TEL: (703)923-6601
FAX: (703)923-6802

BARRIER SYSTEM UPGRADE for COLOMBO, SRI LANKA

WARNING: This document is the property of the U.S. Government. Further reproduction and/or distribution is prohibited without the express written permission of the U.S. Department of State, Washington, DC, 20522-0620. Information on this document is not to be altered except with the written approval of the individual whose seal appears hereon.

DRAWING TITLE: SCHEDULES

PHASE: ☐ 30% ☐ 60% ☐ 90% ■ 100% ☐ AS-BUILT

CAD FILE NAME: CMBD602.dwg
DRAWING SCALE: NONE
PROJECT NUMBER: PME11-13-25
DRAWN BY: JB
DESIGNED BY: FG
DATE: 11/12/13
DRAWING NUMBER: SY6.02
SHEET 24 OF 24
CLASSIFICATION: SENSITIVE BUT UNCLASSIFIED
REV.