CAPE TOWN, SOUTH AFRICA
VBS LOCAL CONTRACTOR PACKAGE
100% DESIGN SUBMISSION
07/16/15

APPROVED

VBS LOCAL CONTRACTOR PACKAGE for CAPE TOWN, SOUTH AFRICA

DESIGN CONCEPT APPROVAL	DATE
PME GOV'T	

REVIEWED BY	DATE
PME BARRIER	
PME ENGINEERING	
PME CAD	

DRAWING TITLE: TITLE PAGE

PHASE: ☐ 30% ☐ 90% ■ 100% ☐ AS-BUILT

CAD FILE NAME: CPTD101.dwg

DRAWING SCALE: NONE

PROJECT NUMBER: CAPE TOWN-PME-11-15-02

DRAWN BY: JB

DESIGNED BY: RS

DATE: 03/13/15

DRAWING NUMBER: SY1.01

SHEET 1 OF 18

CLASSIFICATION

REV.

DRAWING TITLE	DRAWING NUMBER
TITLE PAGE	SY1.01
INDEX PAGE	SY1.02
SYMBOLS AND ABBREVIATIONS	SY1.03
SITE PLAN – REFERENCE ONLY	SY2.01D
PARTIAL SITE PLAN BUILDING "M" – DEMOLITION	SY2.02D
PARTIAL SITE PLAN BUILDING "S" – DEMOLITION	SY2.03D
SITE PLAN – REFERENCE ONLY	SY2.01
PARTIAL SITE PLAN BUILDING "M" – NEW WORK	SY2.02
PARTIAL SITE PLAN BUILDING "S" – NEW YORK	SY2.03
DETAILS	SY5.01
DETAILS	SY5.02
DETAILS	SY5.03
DETAILS	SY5.04
DETAILS	SY5.05
DETAILS	SY5.06
DETAILS	SY5.07
DETAILS	SY5.08
SCHEDULES	SY6.01

VBS LOCAL CONTRACTOR PACKAGE
for
CAPE TOWN, SOUTH AFRICA

DRAWING TITLE
INDEX PAGE

PHASE
☐ 30%
☐ 90%
■ 100%
☐ AS-BUILT

CAD FILE NAME
CPTD102.dwg

DRAWING SCALE
NONE

PROJECT NUMBER
CAPE TOWN-PME-11-15-02

DRAWN BY
JB

DESIGNED BY
PS

DATE
03/13/15

DRAWING NUMBER
SY1.02
SHEET 2 OF 18

CLASSIFICATION

REV.

SYMBOLS

- SIGNAL CONDUIT TO REMAIN
- SIGNAL CONDUIT (NEW OR DEMOLITION
- POWER CONDUIT TO REMAIN
- POWER CONDUIT (NEW OR DEMOLITION)
- (W) WATER PIPE TO REMAIN
- (W) WATER PIPE (NEW OR DEMOLITION)
- EXCAVATION (NEW OR DEMOLITION)
- (U) UNDER FLOOR OR GROUND CONDUIT TO REMAIN
- (U) UNDER FLOOR OF GROUND CONDUIT (NEW OR DEMOLITION)
- CONDUIT UP
- CONDUIT DOWN
- CONDUIT BREAK
- CONDUIT CAP
- PB PULL BOX (SIGNAL/POWER)
- HH HANDHOLE
- MH MANHOLE
- MH MANHOLE
- # DEMOLITION WORK KEY NOTE
- # NEW WORK KEY NOTE
- # EQUIPMENT IDENTIFICATION KEY NOTE
- LB CONDUIT OUTLET BODY TYPE "LB"
- J EQUIPMENT JUNCTION BOX
- TL TRAFFIC LIGHT
- BCP BARRIER CONTROL PANEL
- BTP BARRIER TERMINATION PANEL
- BBU BATTERY BACK-UP
- PE PHOTO-ELECTRONIC EYE
- PE PHOT-ELECTRONIC REFLECTOR
- TS THERMOSTAT
- IR INFRARED DETECTOR
- © DOOR CONTACT
- PDP POWER DISTRIBUTION PANEL
- FIBER FIBER PANEL
- SUB-SIC SUB SIC PANEL
- PNL-EU EU PANEL
- WIREWAY
- INSPECTION LIGHT
- STATIONARY BOLLARD
- SAFETY LOOP
- DELTA HYDRAULIC PUMP UNIT WITH ENCLOSURE
- NASATKA HYDRAULIC PUMP UNIT
- DELTA DSC720 HYDRAULIC BOLLARD
- DELTA DSC2000 WEDGE BARRIER
- DELTA TT270S BARRIER

ABBREVIATIONS

A	AMPERE
AC	ALTERNATING CURRENT
AFF	ABOVE FINISHED FLOOR
AFG	ABOVE FINISHED GRADE
AMP	AMPERE
APPROX	APPROXIMATE(LY)
ARCH	ARCHITECT(URAL)
ATC	ACOUSTICAL TILE CEILING
AUTO	AUTOMATIC
AUX	AUXILIARY
AVG	AVERAGE
AVR	AUTOMATIC VOLTAGE REGULATOR
AWG	AMERICAN WIRE GAUGE
BBU	BATTERY BACK-UP
BCP	BARRIER CONTROL PANEL
BFC	BELOW FINISHED CEILING
BFF	BELOW FINISHED FLOOR
BFG	BELOW FINISHED GRADE
BLDG	BUILDING
BP	BARRIER PANEL
BSMT	BASEMENT
C	CONDUIT
CAT	CATALOG
CB	CIRCUIT BREAKER
CDU	CABINET POWER DISTRIBUTION UNIT
CFCI	CONTRACTOR FURNISHED CONTRACTOR INSTALLED
CFE	CONTRACTOR FURNISHED EQUIPMENT
CKT	CIRCUIT
CLG	CEILING
CO	CLEAN OUT
COL	COLUMN
COM	COMMON
CONT	CONTINUE, CONTINUOUS
DB	DECIBEL, DIRECT BURIAL
DC	DIRECT CURRENT
DET	DETAIL
DIA	DIAMETER
DIM	DIMENSION
DN	DOWN
DPDT	DOUBLE POLE DOUBLE THROW
DPST	DOUBLE POLE SINGLE THROW
DOS	UNITED STATES DEPARTMENT OF STATE
DWG	DRAWING
E	EAST
(E)	EXISTING
EA	EACH
EC	ELEVTRICAL CABINET
EG	EQUIPMENT GROUND
EL	ELEVATION
ELEC	ELECTRIC(AL)
EMT	ELECTROMETALLIC TUBING
EQ	EQUAL
EQUIP	EQUIPMENT
ETC	ET CETERA
EXT	EXTERIOR
FA	FIRE ALARM
FLEX	FLEXIBLE
FMC	FLEXIBLE METAL CONDUIT
FSS	FUSED SAFETY SWITCH
FT	FEET, FOOT
GA	GAUGE
GALV	GALVANIZED
GFCI	GROUND FAULT CKT INTERRUPTER
GFE	GOVERNMENT FURNISHED EQUIPMENT
GFGI	GOVERNMENT FURNISHED GOVERNMENT INSTALLED
GOVT	GOVERNMENT
GRND	GROUND
H, HT	HEIGHT
HDPE	HIGH DENSITY POLYETHYLENE PIPE
HDW	HARDWARE
HEX	HEXAGONAL
HH	HANDHOLE
HOR	HORIZONTAL
HP	HORSEPOWER
HPU	HYDRAULIC POWER UNIT
HVAC	HEATING, VENTILATING AND AIR CONDITIONING
HZ	HERTZ
IAW	IN ACCORDANCE WITH
ID	INSIDE DIAMETER/IDENTIFICATION
IN	INCH(ES)
INSUL	INSULATION, INSULATED
I/O	INPUT AND OUTPUT
IR	INFRARED
JBOX	JUNCTION BOX
KG	KILOGRAM(S)
KO	KNOCKOUT
KW	KILOWATT(S)
L	LENGTH, LONG, LITER(S)
LFMC	LIQUID-TIGHT FLEXIBLE METAL CONDUIT
LxWxH	LENGTH x WIDTH x HEIGHT
m	METER
MAX	MAXIMUM
MECH	MECHANICAL
MDP	MAIN DISTRIBUTION PANEL
MFR	MANUFACTURER
MH	MOUNTING HEIGHT, MANHOLE
MIN	MINIMUM
MISC	MISCELLANEOUS
mm	MILLIMETER
MTD	MOUNTED
MTG	MOUNTING
N	NORTH
NC	NORMALLY CLOSED
NEC	NATIONAL ELECTRICAL CODE
NEMA	NATIONAL ELECTRICAL MANUFACTURERS ASSOCIATION
NFSS	NON-FUSED SAFETY SWITCH
NO	NORMALLY OPEN
NOM	NOMINAL
OD	OUTSIDE DIAMETER
OH	OVERHEAD
P	POWER
PB	PULL BOX
PDS	PROTECTED DISTRIBUTION SYSTEMS
PDP	POWER DISTRIBUTION PANEL
PE	PHOTO ELECTRONIC EYE
PH	PHASE
PNL	PANEL
PRELIM	PRELIMINARY
PSO	POST SECURITY OFFICER
PSU	POWER SUPPLY UNIT
PVC	POLYVINYL CHLORIDE
R	RADIUS, RISER
RECPT	RECEPTACLE
REINF	REINFORCEMENT
REG	REGULATOR
REQD	REQUIRED
REV	REVISION
RGS	RIGID GALVANIZED STEEL
RM	ROOM
RPM	REVOLUTIONS PER MINUTE
RSO	REGIONAL SECURITY OFFICER
S	SOUTH
SCH	SCHEDULE
SEC	SECURITY
SECT	SECTION
SEO	SECURITY ENGINEERING OFFICER
SH	SHIELD
SHT	SHEET
SIG	SIGNAL
SPDT	SINGLE POLE DOUBLE THROW
SPEC	SPECIFICATION
SQ	SQUARE
SUSP	SUSPENDED
SW	SWITCH
TEMP	TEMPORARY, TEMPERATURE
THHN	THERMOPLASTIC HIGH HEAT RESISTANT NYLON
THRU	THROUGH
TL	TRAFFIC LIGHT
TS	THERMOSTAT
TYP	TYPICAL
U	UNSHIELDED
(U)	UNDERGROUND
UFAS	UNIFORMED FEDERAL ACCESSIBILITY STANDARDS
UNO	UNLESS NOTED OTHERWISE
UPS	UNINTERRUPTIBLE POWER SUPPLY
V	VOLT(S)
VERT	VERTICAL
(VIF)	VERIFY IN FIELD
W	WIDTH, WIDE, WEST, WATT(S)
W/	WITH
W/O	WITHOUT
WT	WEIGHT
WTMD	WALK THROUGH METAL DETECTOR
ZN	ZONE
±	PLUS/MINUS
ø	DIAMETER, PHASE

NOTE:

NOT ALL SYMBOLS AND ABBREVIATIONS LISTED ARE APPLICABLE TO THIS DRAWING PACKAGE.

VBS LOCAL CONTRACTOR PACKAGE for CAPE TOWN, SOUTH AFRICA

DRAWING TITLE: SYMBOLS AND ABBREVIATIONS

PHASE: ☐ 30% ☐ 90% ■ 100% ☐ AS-BUILT

CAD FILE NAME: CPTD103.dwg

DRAWING SCALE: NONE

PROJECT NUMBER: CAPE TOWN-PME-11-15-02

DRAWN BY: JB

DESIGNED BY: RS

DATE: 03/13/15

DRAWING NUMBER: SY1.03

SHEET 3 OF 18

CLASSIFICATION

REV.

DRAWING NOTES

1. SOME EQUIPMENT AND INFRASTRUCTURE IS SHOWN FOR REFERENCE ONLY.

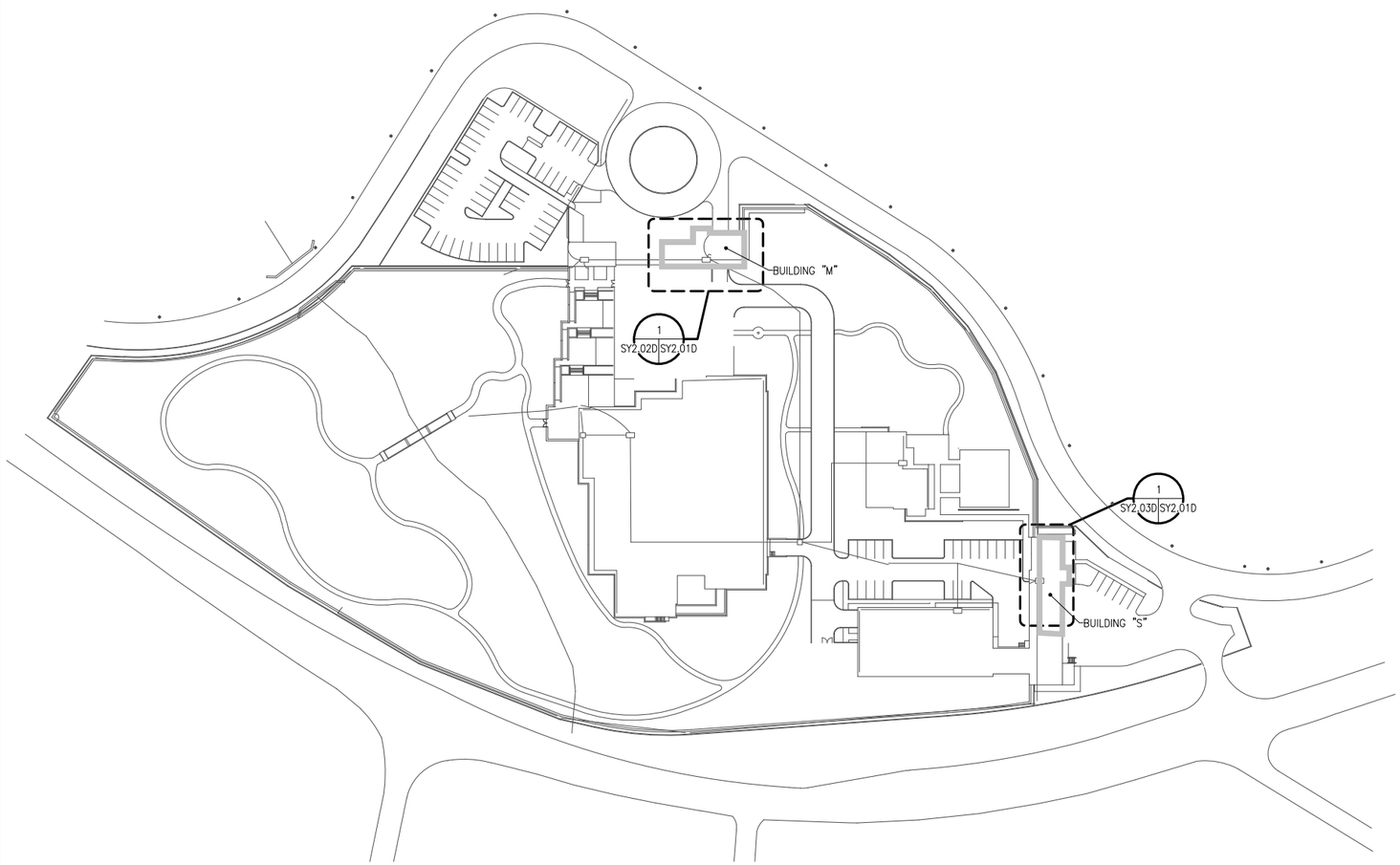

1 SY2.01D SY2.01D SITE PLAN REFERENCE ONLY SCALE: 1:750

VBS LOCAL CONTRACTOR PACKAGE for CAPE TOWN, SOUTH AFRICA

GRAPHICAL SCALES

1:750 — 0, 10000, 20000, 40000, 75000mm — 0, 32', 65', 131', 246 ft

DRAWING TITLE: SITE PLAN REFERENCE ONLY

PHASE: ☐ 30% ☐ 90% ■ 100% ☐ AS-BUILT

CAD FILE NAME: CPTD201.dwg

DRAWING SCALE: AS NOTED

PROJECT NUMBER: CAPE TOWN-PME-11-15-02

DRAWN BY: JB

DESIGNED BY: PS

DATE: 03/13/15

DRAWING NUMBER: SY2.01D

SHEET 4 OF 18

CLASSIFICATION

REV.

DRAWING NOTES

1. SOME EQUIPMENT AND INFRASTRUCTURE IS SHOWN FOR REFERENCE ONLY.

DRAWING KEY NOTES

1. REMOVE EXISTING 3HP NASATKA DIII HYRAULIC PUMP UNIT, ENCLOSURE, CONTROL PANEL, AND ASSOCIATED WIRING. REFER TO NASATKA HPU MANUAL. REPAIR AND FINISH CONCRETE SLAB AS REQUIRED.
2. REMOVE EXISTING HYRAUDLIC LINES FROM HPU TO BARRIER.
3. REMOVE WIRING FROM HPU TO LIMIT SWITCH.
4. REMOVE CONTROL WIRING FROM HPU TO PANEL A-1. CONDUIT TO BE CUT AND EXTENDED TO NEW HPU OUTSIDE OF SALLEY PORT.
5. CUT CONDUIT BACK IN ORDER TO CONNECT TO NEW JUNCTION BOX. CAREFULLY PULL ENOUGH SLACK BACK TO MAKE SPLICE IN BOX. EXISTING POWER CIRCUIT TO BE REUSED.
6. REMOVE WIRING TO TRAFFIC LIGHT FROM HPU. CONDUIT TO BE REUSED.
7. CUT CONDUIT BELOW GRADE. CAP AND ABANDON. (7 PLACES)
8. REMOVE CONDUIT AND WIRING FROM HPU TO JUNCTION BOX.
9. CUT AND REMOVE CONDUIT STUB UP. HORIZONTAL CONDUIT BELOW SLAB TO BE EXTENDED TO NEW HPU FOR NEW HYDRAULIC LINES.
10. REMOVE EXISTING LIMIT SWITCH WIRING FROM HPU TO BARRIER. CUT CONDUIT EXTEND TO NEW HPU.
11. CUT CONDUIT BACK IN ORDER TO CONNECT TO NEW JUNCTION BOX.
12. ABANDON EXISTING SAFETY LOOP AND WIRING.
13. REMOVE EXISTING SAFETY LOOP AND WIRING.
14. REMOVE TRAFFIC LIGHT FROM PIPE. SHORTEN PIPE SO NEW TRAFFIC LIGHT BASE WILL FIT OVER IT.

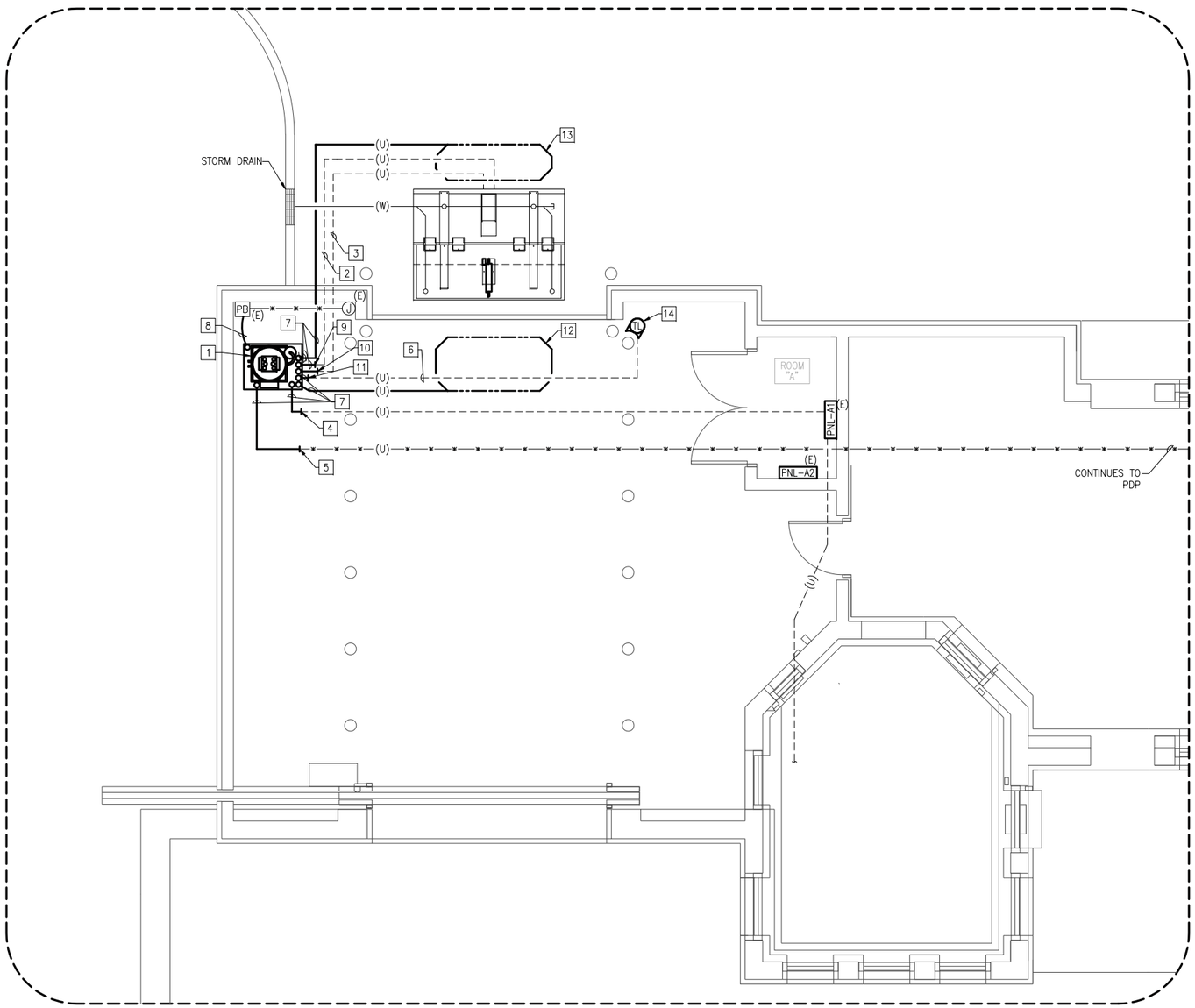

PARTIAL SITE PLAN – BUILDING "M"

1 SY2.01D SY2.02D SCALE: 1:40

VBS LOCAL CONTRACTOR PACKAGE for CAPE TOWN, SOUTH AFRICA

KEYPLAN

GRAPHICAL SCALES

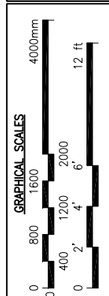

DRAWING TITLE: PARTIAL SITE PLAN BUILDING "M" DEMOLITION

PHASE: ☐ 30% ☐ 90% ■ 100% ☐ AS-BUILT

CAD FILE NAME	CPTD202.dwg
DRAWING SCALE	AS NOTED
PROJECT NUMBER	CAPE TOWN-PME-11-15-02
DRAWN BY	JB
DESIGNED BY	PS
DATE	03/13/15
DRAWING NUMBER	SY2.02D
SHEET 5 OF 18	
CLASSIFICATION	
REV.	

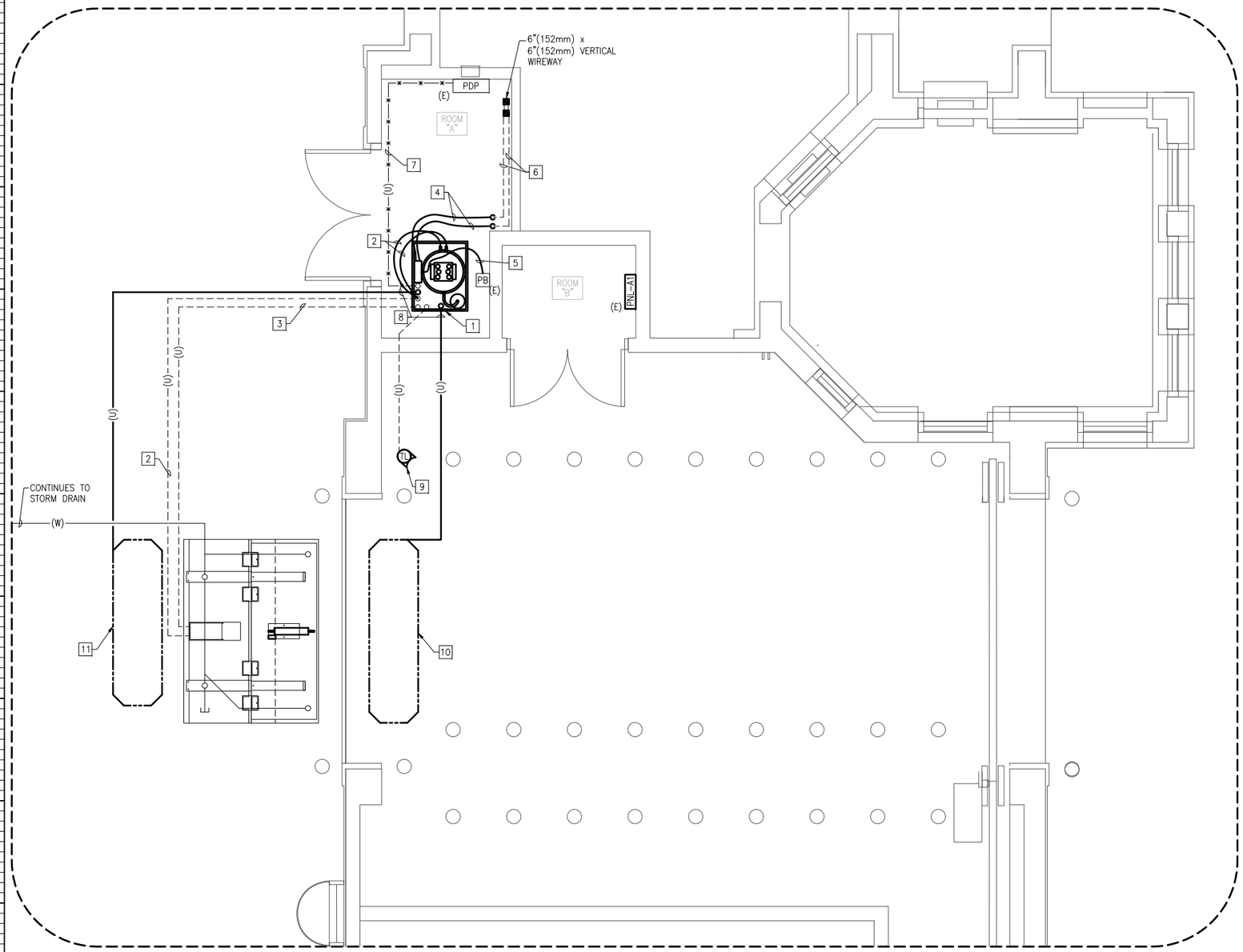

DRAWING KEY NOTES

1. SOME EQUIPMENT AND INFRASTRUCTURE IS SHOWN FOR REFERENCE ONLY.

DRAWING KEY NOTES

1. REMOVE EXISTING 3HP NASATKA DIII HYRAULIC PUMP UNIT, ENCLOSURE, CONTROL PANEL, AND ASSOCIATED WIRING. REFER TO NASATKA HPU MANUAL.
2. REMOVE EXISTING HYRAUDLIC LINES FROM HPU TO BARRIER. CONDUIT TO BE REUSED TO PULL NEW HYDRAULIC LINES. (3 PLACES)
3. REMOVE WIRING FROM HPU TO LIMIT SWITCH. CONDUIT TO BE REUSED TO PULL NEW WIRING TO NEW LIMIT SWITCH.
4. DISCONNECT CONTROL WIRING FROM HPU. WIRING TO BE REUSED WITH NEW SYSTEM. CUT CONDUIT BACK TO BE REUSED. (2 PLACES)
5. REMOVE CONDUIT AND WIRING FROM HPU UP TO PULLBOX.
6. WIRING TO BE REUSED. (2 PLACES)
7. REMOVE POWER CIRCUIT FROM PDP TO HPU. CONDUIT TO BE REUSED.
8. DISCONNECT WIRING TO LOOP DETECTORS. CUT CONDUIT AND CAP BELOW SLAB. (2 PLACES)
9. REMOVE TRAFFIC LIGHT FROM PIPE. SHORTEN PIPE SO NEW TRAFFIC LIGHT BASE WILL FIT OVER IT.
10. ABANDON DETECTOR LOOP IN CONCRETE.
11. REMOVE LOOP DETECTOR AND WIRING.

1 SY2.01D | SY2.03D PARTIAL SITE PLAN – BUILDING "S"
SCALE: 1:30

VBS LOCAL CONTRACTOR PACKAGE for CAPE TOWN, SOUTH AFRICA

KEYPLAN

GRAPHICAL SCALES
1:30 — 0, 300, 600, 1200, 3000mm — 0, 18", 36", 54", 9 ft

DRAWING TITLE: PARTIAL SITE PLAN BUILDING "S" DEMOLITION

PHASE: ☐ 30% ☐ 90% ■ 100% ☐ AS-BUILT

CAD FILE NAME: CPTD203.dwg
DRAWING SCALE: AS NOTED
PROJECT NUMBER: CAPE TOWN-PME-11-15-02
DRAWN BY: JB
DESIGNED BY: RS
DATE: 03/13/15
DRAWING NUMBER: SY2.03D
SHEET 6 OF 18
CLASSIFICATION
REV.

DRAWING NOTES

1. SOME EQUIPMENT AND INFRASTRUCTURE IS SHOWN FOR REFERENCE ONLY.

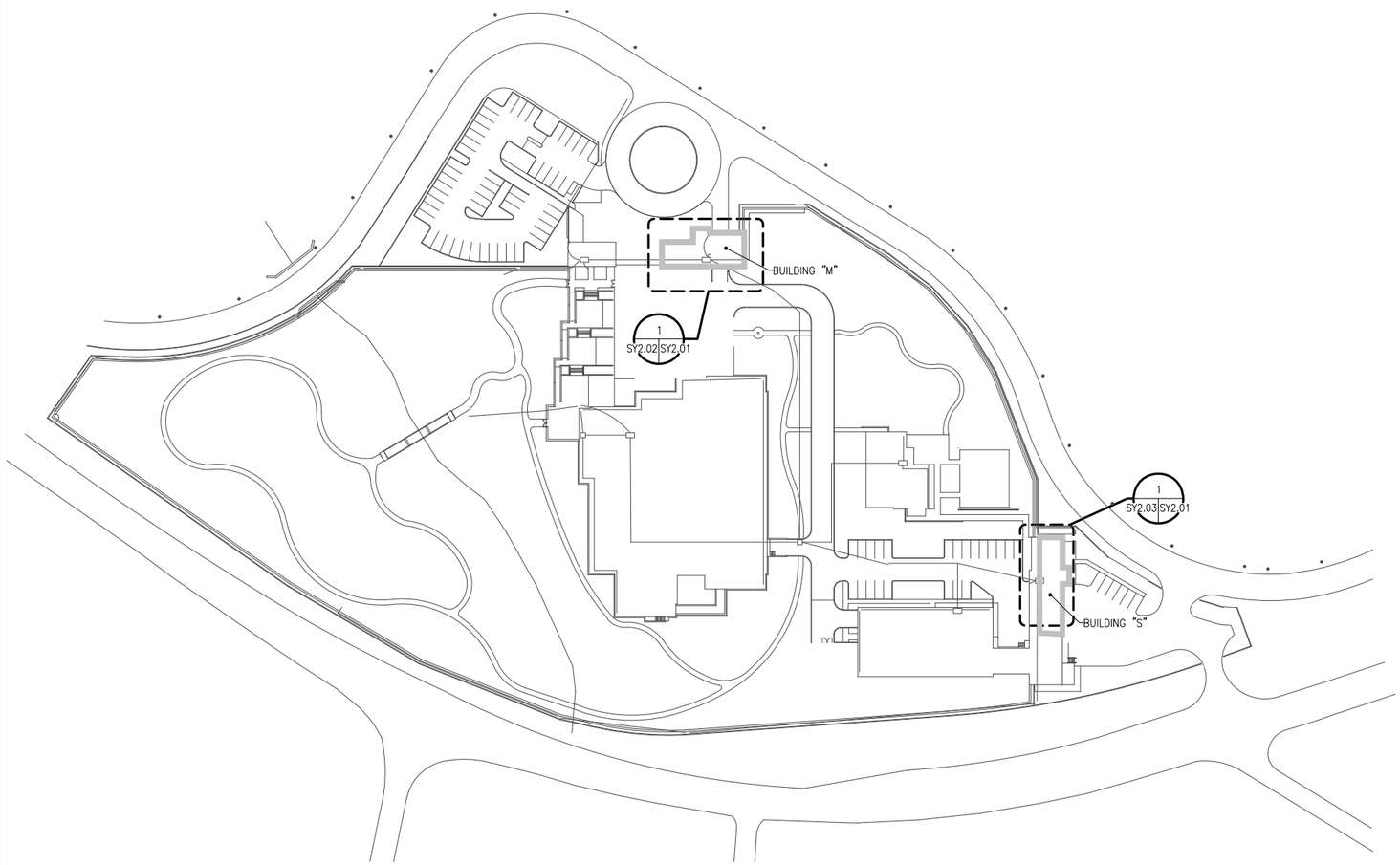

1 SY2.01 SY2.01 SITE PLAN REFERENCE ONLY

SCALE: 1:750

VBS LOCAL CONTRACTOR PACKAGE for CAPE TOWN, SOUTH AFRICA

GRAPHICAL SCALES

1:750 — 0, 10000, 20000, 40000, 75000mm

0, 32', 65', 131', 246 ft

DRAWING TITLE: SITE PLAN REFERENCE ONLY

PHASE: ☐ 30% ☐ 90% ■ 100% ☐ AS-BUILT

CAD FILE NAME	CPTD201.dwg
DRAWING SCALE	AS NOTED
PROJECT NUMBER	CAPE TOWN-PME-11-15-02
DRAWN BY	JB
DESIGNED BY	PS
DATE	03/13/15
DRAWING NUMBER	SY2.01
SHEET	7 OF 18
CLASSIFICATION	
REV.	

DRAWING NOTES

1. NO CLIMBABLE FEATURES SHALL BE INSTALLED WITHIN THE SALLY PORT.
2. ALL CONDUIT IS 1"(25mm) PVC UNLESS NOTED OTHERWISE.
3. SOME EQUIPMENT AND INFRASTRUCTURE IS SHOWN FOR REFERENCE ONLY.
4. REFER TO DRAWING SY5.07, DETAIL 4 FOR LIMITS OF CONCRETE SLAB WORK.

DRAWING KEY NOTES

1. INSTALL NEW SAFETY LOOP. REFER TO DRAWING SY5.04.
2. EXTEND 3"(76mm) CONDUIT FOR NEW HYDRAULIC LINES TO NEW HPU. PULL NEW HYDRAULIC LINES FROM NEW HPU TO EXISTING BARRIER.
3. EXTEND CONDUIT FOR NEW LIMIT SWITCH WIRING TO NEW HPU. PULL NEW CONTROL WIRING FROM NEW HPU TO NEW LIMIT SWITCH.
4. IINSTALL NEW TRAFFIC LIGHT AND WIRING. TRAFFIC LIGHT SHALL BE POLE MOUNTED. (2 PLACES)
5. EXTEND EXISTING CONDUIT TO NEW JUNCTION BOX.
6. INSTALL NEW PHOTO EYE TRANSMITTERS AND RECEIVERS ON SAME STANCHION. HIGH AND LOW ARRANGEMENT.
7. EXTEND CONDUIT FOR CONTROLS TO NEW HPU.
8. EXTEND CONDUIT WITH POWER CIRCUIT TO NEW JUNCTION BOX. LEAVE ENOUGH SLACK IN WIRES TO SPLICE IN BOX.
9. INSTALL NEW JUNCTION BOX ABOVE 10'(3048mm) A.F.F. (2 PLACES)
10. RUN CONDUIT THROUGH WALL ABOVE FOOTER. (5 PLACES)
11. INSTALL NEW 3HP HPU AND ENCLOSURE ON NEW CONCRETE PAD.
12. INSTALL 20AMP HEAVY DUTY SWITCH FOR HPU CONTROL CIRCUIT.
13. INSTALL NEW BOX TO ENCLOSE BACKUP BATTERIES.
14. RUN CONDUIT THROUGH WALL ABOVE 10 FEET. (3 PLACES)

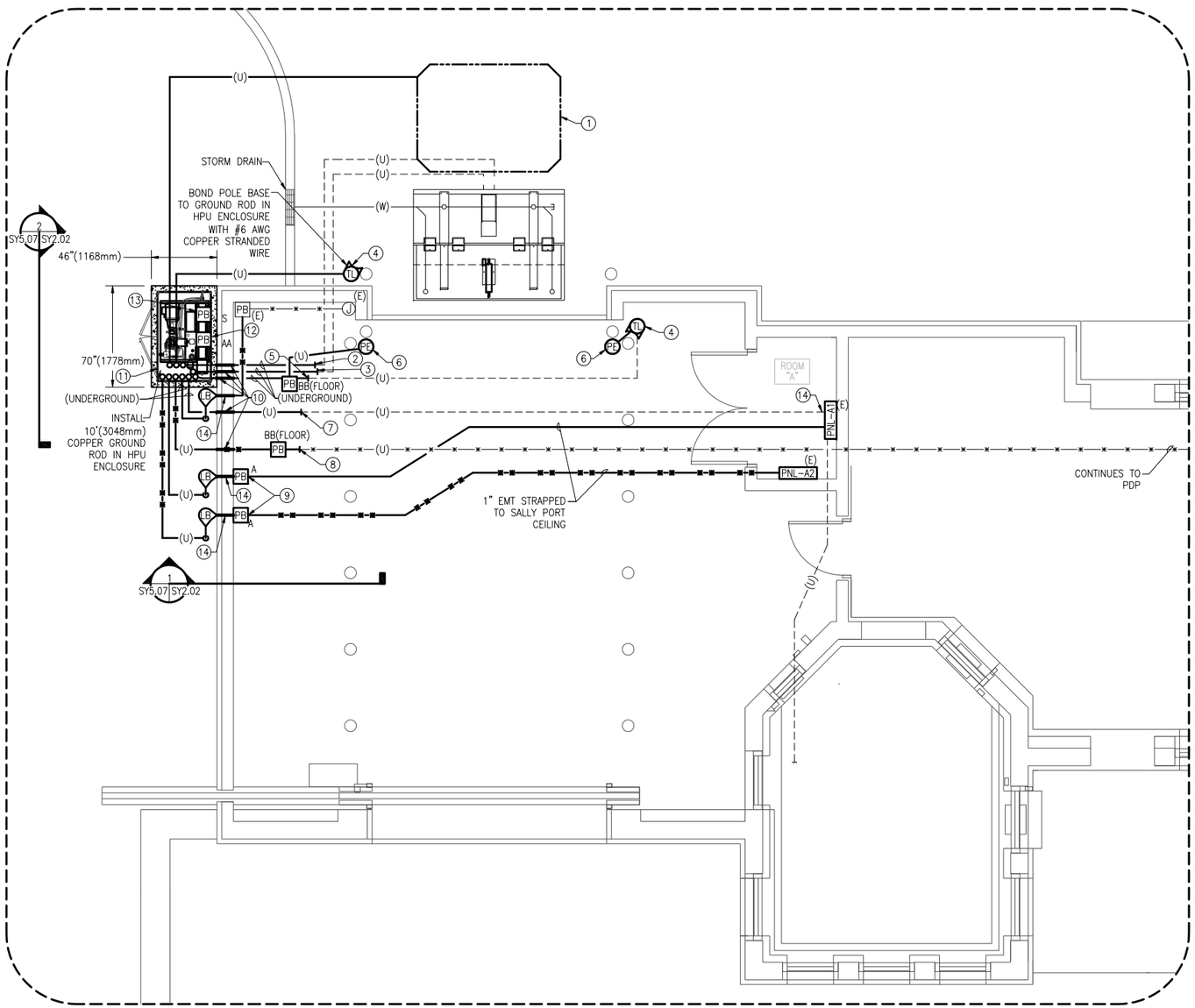

PARTIAL SITE PLAN – BUILDING "M"

SY2.01 SY2.02 SCALE: 1:40

VBS LOCAL CONTRACTOR PACKAGE for CAPE TOWN, SOUTH AFRICA

KEYPLAN

GRAPHICAL SCALES

DRAWING TITLE: PARTIAL SITE PLAN BUILDING "M" NEW WORK

PHASE: 30% 90% 100% AS-BUILT

CAD FILE NAME: CPTD202.dwg

DRAWING SCALE: AS NOTED

PROJECT NUMBER: CAPE TOWN-PME-11-15-02

DRAWN BY: JB

DESIGNED BY: RS

DATE: 03/13/15

DRAWING NUMBER: SY2.02

SHEET 8 OF 18

CLASSIFICATION

REV.

DRAWING NOTES

1. NO CLIMBABLE FEATURES SHALL BE INSTALLED WITHIN SALLY PORT.
2. ALL CONDUIT IS 1"(25mm) PVC UNLESS NOTED OTHERWISE.
3. SOME EQUIPMENT AND INFRASTRUCTURE IS SHOWN FOR REFERENCE ONLY.

DRAWING KEY NOTES

1. INSTALL NEW SAFETY LOOP. REFER TO DRAWING SY5.04.
2. PULL NEW HYDRAULIC LINES FROM EXISTING BARRIER TO NEW HPU USING EXISTING CONDUIT. (2 PLACES)
3. PULL CONTROL WIRING TO NEW LIMIT SWITCH USING EXISTING CONDUIT.
4. IINSTALL NEW TRAFFIC LIGHT AND WIRING. TRAFFIC LIGHT SHALL BE POLE MOUNTED. (2 PLACES)
5. INSTALL NEW PHOTO EYE TRANSMITTERS AND RECEIVERS ON SAME STANCHION. HIGH AND LOW ARRANGEMENT. (2 PLACES)
6. INSTALL NEW JUNCTION BOX 10'(3048mm) ABOVE FINISHED FLOOR. (2 PLACES)
7. INSTALL PULL BOX WITH TERMINAL STRIP FOR A CONTROL WIRING BREAKOUT POINT. CONNECT CONTROL WIRES TO NEW HPU CONTROL PANEL.
8. PULL NEW CIRCUIT FROM PDP TO NEW HPU.
9. INSTALL NEW 20AMP HEAVY DUTY SWITCH FOR HPU CONTROL CIRCUIT.
10. INSTALL NEW 3HP DELTA HPU.
11. INSTALL NEW CIRCUIT FROM A1 PANEL TO HPU FOR CONTROL CIRCUIT POWER.
12. INSTALL NEW BATTERY BOX.
13. REFER TO DRAWING SY5.07 FOR TYPICAL WALL PENETRATION.

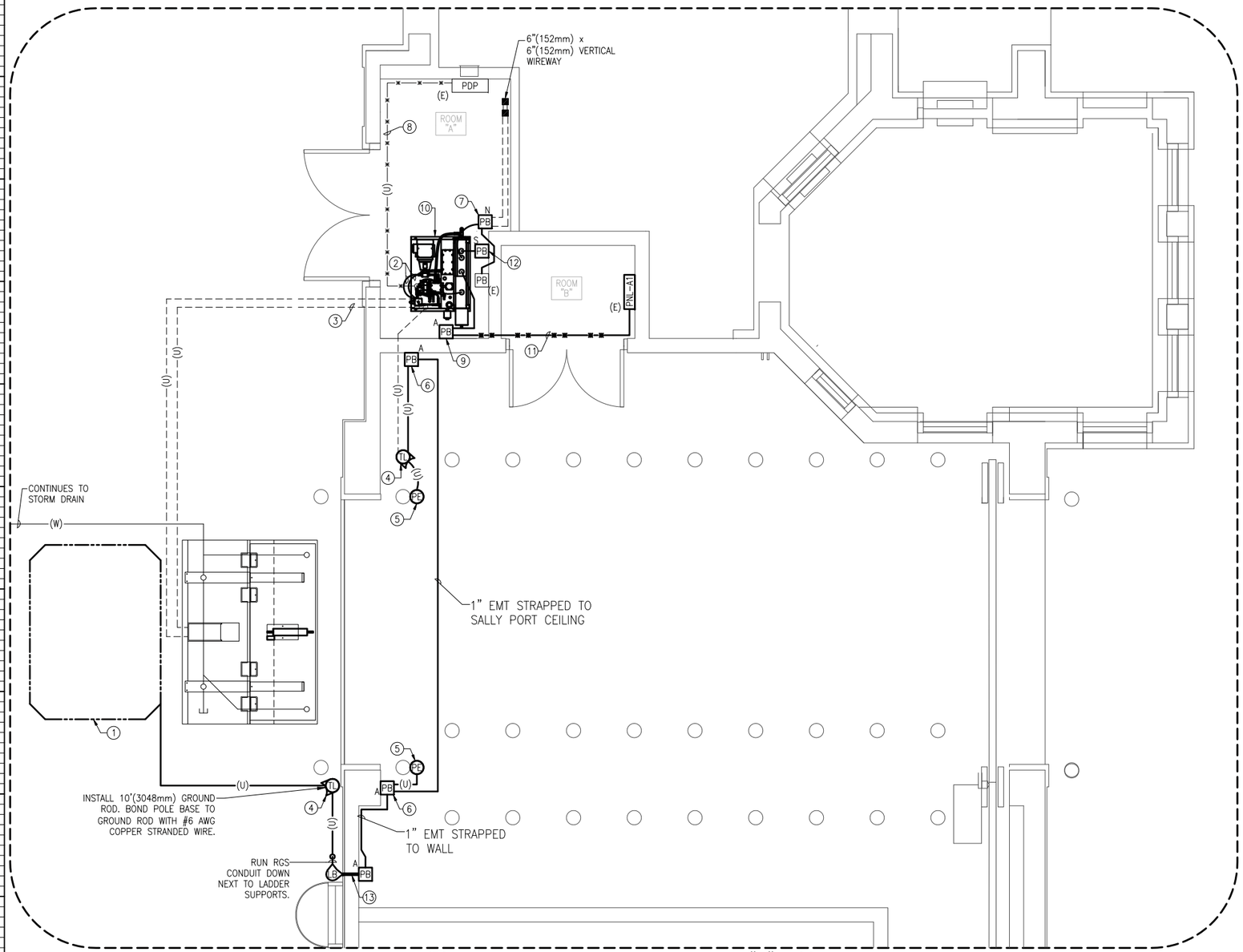

1 SY2.01 SY2.03 PARTIAL SITE PLAN – BUILDING "S"
SCALE: 1:30

VBS LOCAL CONTRACTOR PACKAGE for CAPE TOWN, SOUTH AFRICA

KEYPLAN

GRAPHICAL SCALES

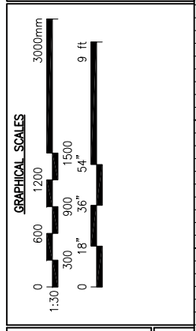

DRAWING TITLE
PARTIAL SITE PLAN BUILDING "S"
NEW WORK

PHASE ☐ 30% ☐ 90% ■ 100% ☐ AS-BUILT

CAD FILE NAME: CPTD203.dwg
DRAWING SCALE: AS NOTED
PROJECT NUMBER: CAPE TOWN-PME-11-15-02
DRAWN BY: JB
DESIGNED BY: RS
DATE: 03/13/15
DRAWING NUMBER: SY2.03
SHEET 9 OF 18
CLASSIFICATION
REV.

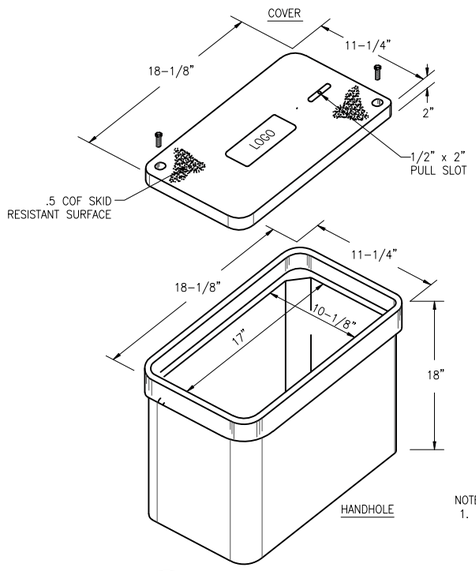

NOTES:
1. HANDHOLE COVER SHOULD BE LOCKABLE AND A TIER 22 AND HAVE A 22,500 DESIGN LOAD AND 33,750 TEST LOAD.

SMALL QUAZITE PRE-FAB HANDHOLE DETAIL

1 SY5.01 | SY5.01 SCALE: NONE

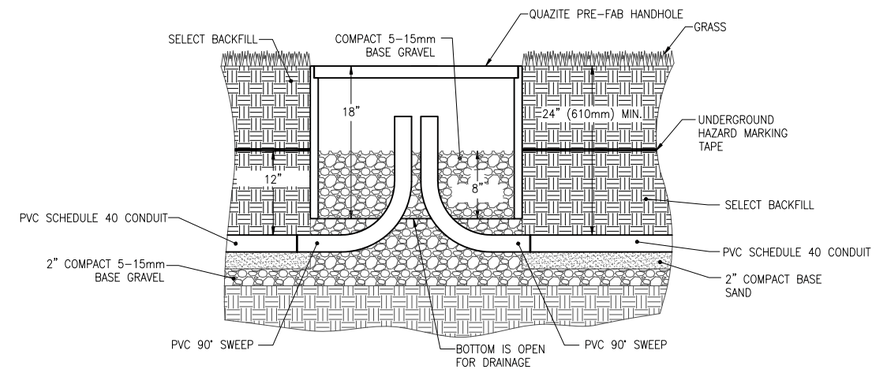

HANDHOLE AND CONDUIT INSTALLATION DETAIL – GRASS AREA

2 SY5.01 | SY5.01 SCALE: NONE

VBS LOCAL CONTRACTOR
PACKAGE
for
CAPE TOWN, SOUTH AFRICA

DRAWING TITLE
DETAILS

PHASE
☐ 30%
☐ 90%
■ 100%
☐ AS-BUILT

CAD FILE NAME
CPTD501.dwg

DRAWING SCALE
NONE

PROJECT NUMBER
CAPE TOWN-PME-11-15-02

DRAWN BY
JB

DESIGNED BY
RS

DATE
03/13/15

DRAWING NUMBER
SY5.01
SHEET 10 OF 18

CLASSIFICATION

REV.

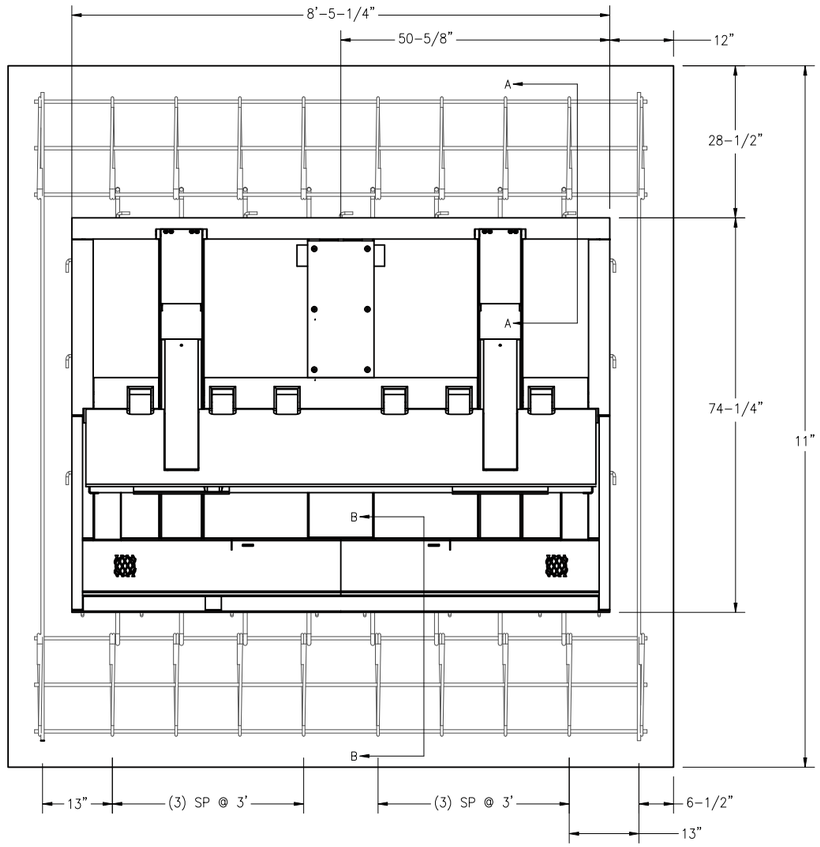

1 SY5.02 SY5.02 NASATKA IIID 8' VEHICLE BARRIER DETAIL – TOP VIEW – REFERENCE ONLY

SCALE: NONE

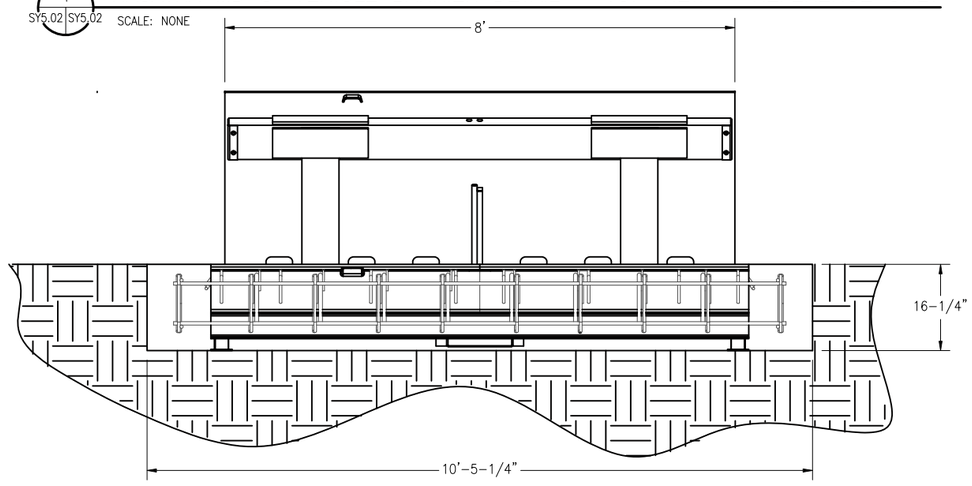

2 SY5.02 SY5.02 NASATKA IIID 8' VEHICLE BARRIER DETAIL – FRONT VIEW – REFERENCE ONLY

SCALE: NONE

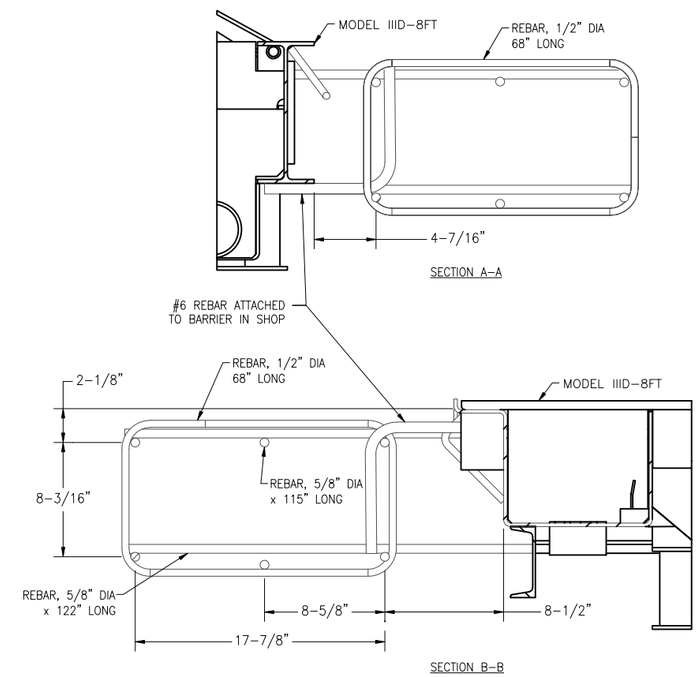

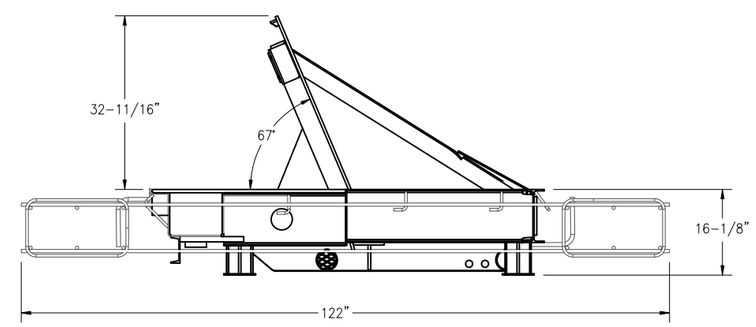

3 SY5.02 SY5.02 NASATKA IIID 8' VEHICLE BARRIER DETAIL – SIDE VIEW REFERENCE ONLY

SCALE: NONE

VBS LOCAL CONTRACTOR PACKAGE
for
CAPE TOWN, SOUTH AFRICA

DRAWING TITLE: DETAILS

PHASE: ☐ 30% ☐ 90% ■ 100% ☐ AS-BUILT

CAD FILE NAME: CPTD502.dwg

DRAWING SCALE: NONE

PROJECT NUMBER: CAPE TOWN-PME-11-15-02

DRAWN BY: JB

DESIGNED BY: RS

DATE: 03/13/15

DRAWING NUMBER: SY5.02

SHEET 11 OF 18

CLASSIFICATION

REV.

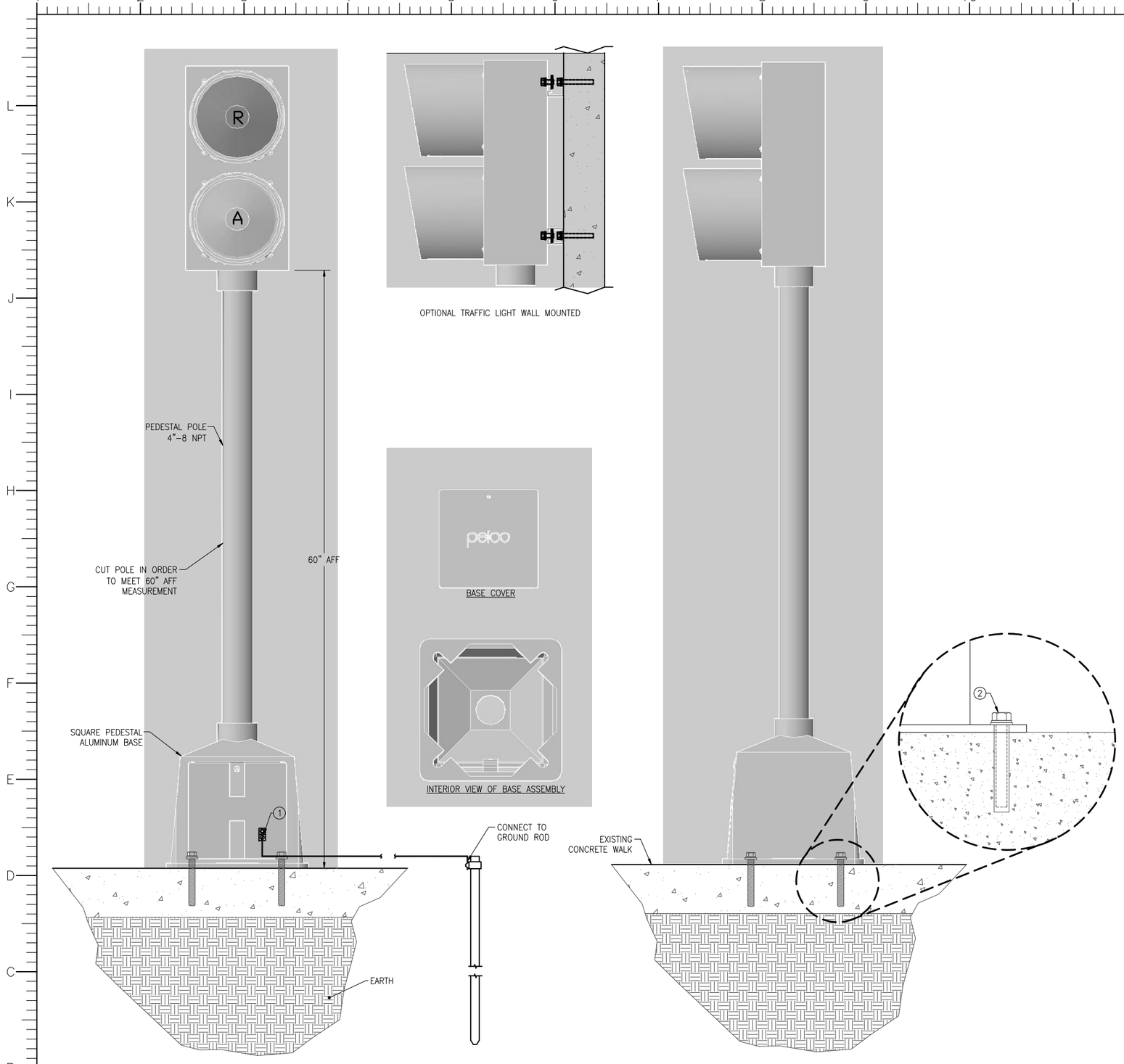

1
SY5.03 SY5.03

TRAFFIC LIGHT POLE

SCALE: NONE

DRAWING KEY NOTES

1. GROUND POLE BASE TO GROUND ROD WITH #6 AWG COPPER STRANDED WIRE.
2. 3/8" STAINLESS STEEL HILTI KWIK BOLT, 3/8"-16 THREAD WITH EFFECTIVE MINIMUM NOMINAL EMBEDMENT LENGTH OF 2-5/16".

VBS LOCAL CONTRACTOR
PACKAGE
for
CAPE TOWN, SOUTH AFRICA

DRAWING TITLE: DETAILS

PHASE: ☐ 30% ☐ 90% ■ 100% ☐ AS-BUILT

CAD FILE NAME	CPTD503.dwg
DRAWING SCALE	NONE
PROJECT NUMBER	CAPE TOWN-PME-11-15-02
DRAWN BY	JB
DESIGNED BY	RS
DATE	03/13/15
DRAWING NUMBER	SY5.03
SHEET	12 OF 18
CLASSIFICATION	
REV.	

DRAWING KEY NOTES

1. TOP OF LOOP TO BE A MINIMUM OF 1" BELOW SURFACE OF ROAD.
2. CUT CORNERS AT 45° ANGLE.
3. USE BONDO P-606 EPOXY, OR EQUIVALENT TO SEAL WIRES.
4. A CONCAVE FINISH AT TOP OF EPOXY CAN BE CREATED BY USING A STANDARD KITCHEN SPOON.

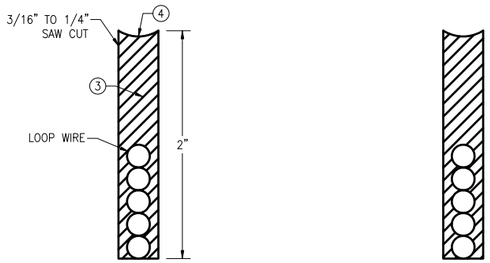

SECTION "A"

NOTE: COMPUTE THE AREA OF THE PROPOSED LOOP IN SQUARE FEET AND THEN USING THE CHART BELOW, LOOKUP THE APPROPRIATE NUMBER OF TURNS.

AREA SQUARE FEET	TURNS
5–14	6
15–20	5
21–64	4
65–250	3
OVER 250	2

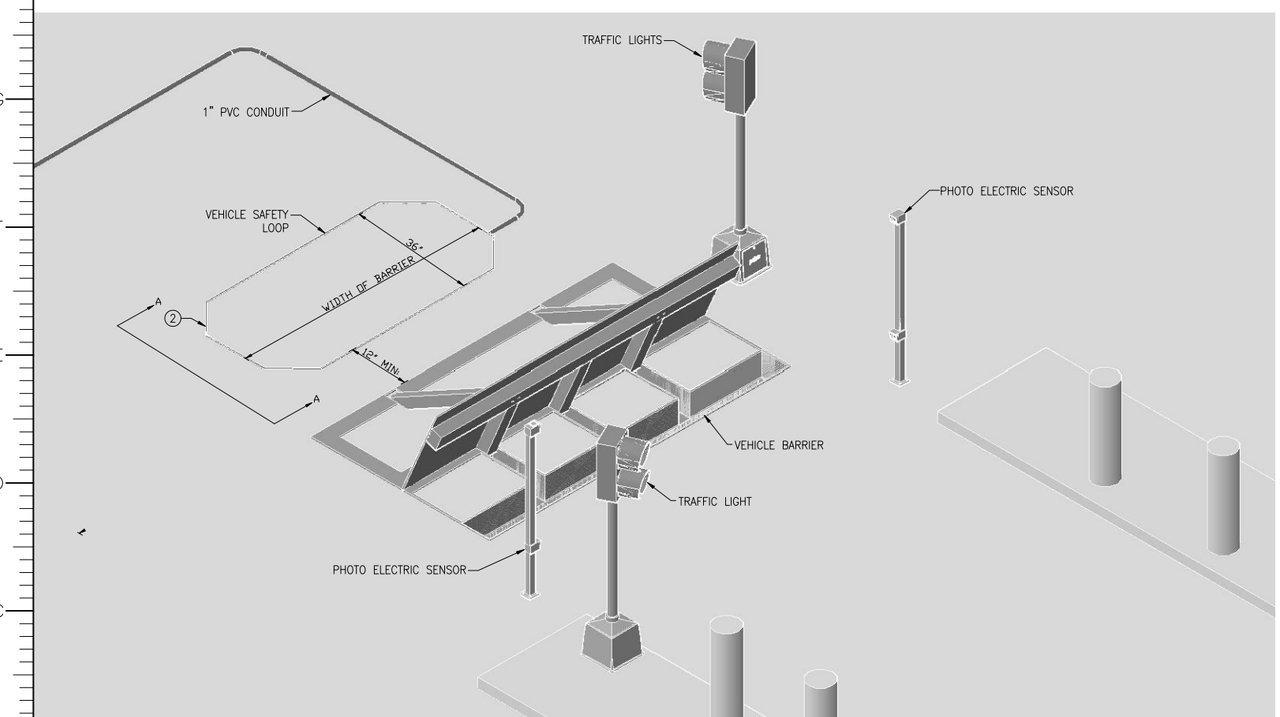

1 SY5.04 | SY5.04 TYPICAL SAFETY LOOP INSTALLATION DETAIL

SCALE: NONE

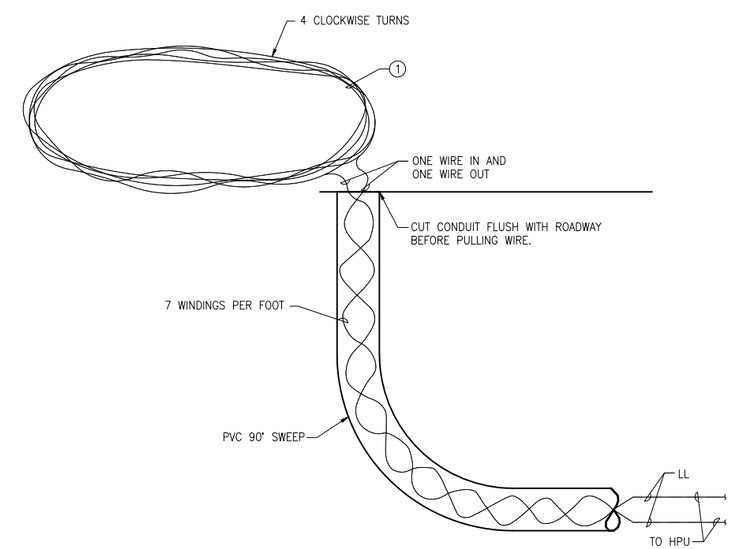

2 SY5.04 | SY5.04 WIRING INSTALLATION DETAIL

SCALE: NONE

VBS LOCAL CONTRACTOR PACKAGE
for
CAPE TOWN, SOUTH AFRICA

DRAWING TITLE: DETAILS

PHASE: ☐ 30% ☐ 90% ■ 100% ☐ AS-BUILT

CAD FILE NAME: CPTD504.dwg

DRAWING SCALE: NONE

PROJECT NUMBER: CAPE TOWN-PME-11-15-02

DRAWN BY: JB

DESIGNED BY: RS

DATE: 03/13/15

DRAWING NUMBER: SY5.04

SHEET 13 OF 18

CLASSIFICATION

REV.

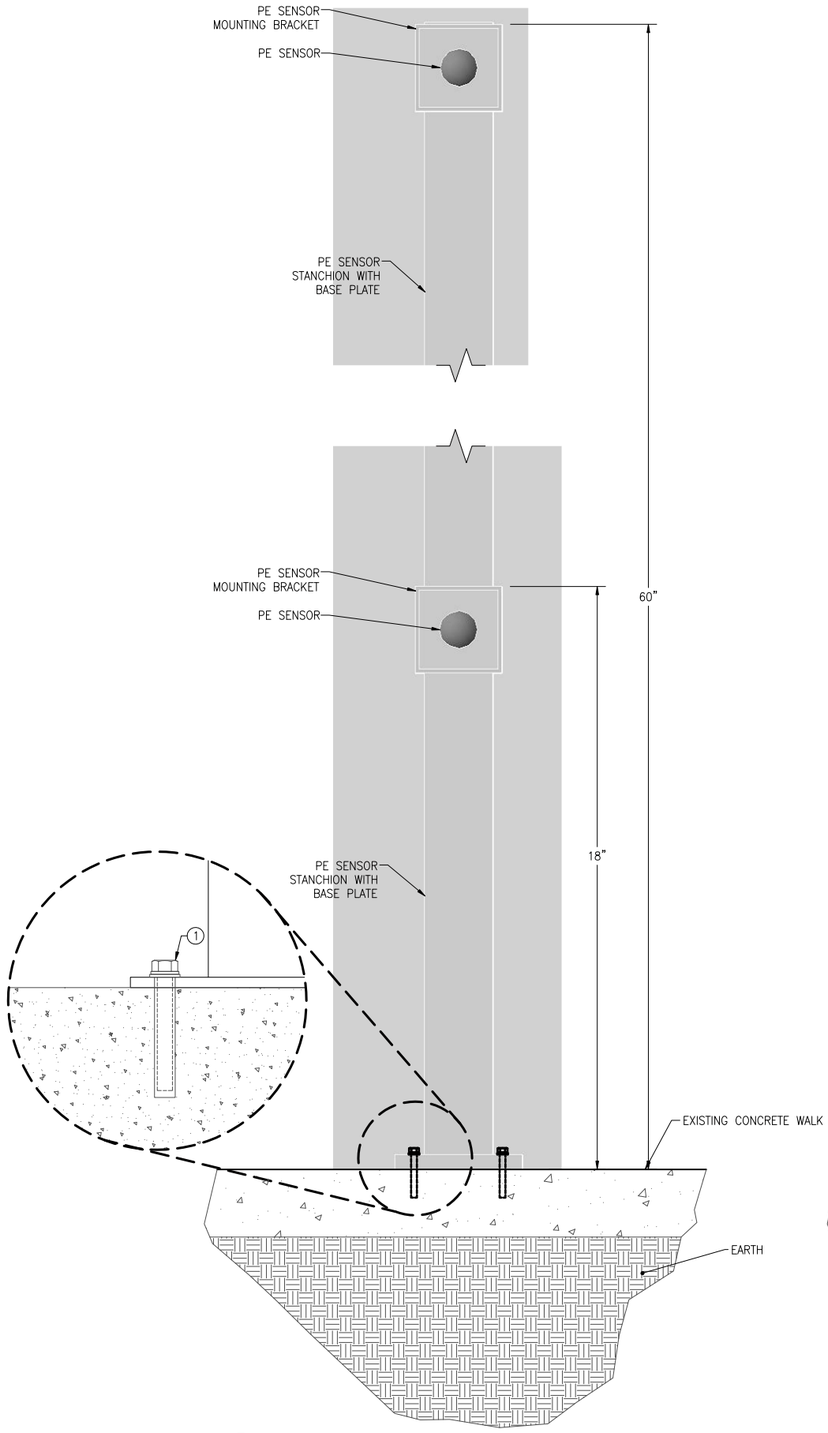

1 SY5.05 | SY5.05 PE MOUNTING POST DETAIL – FRONT VIEW

SCALE: NONE

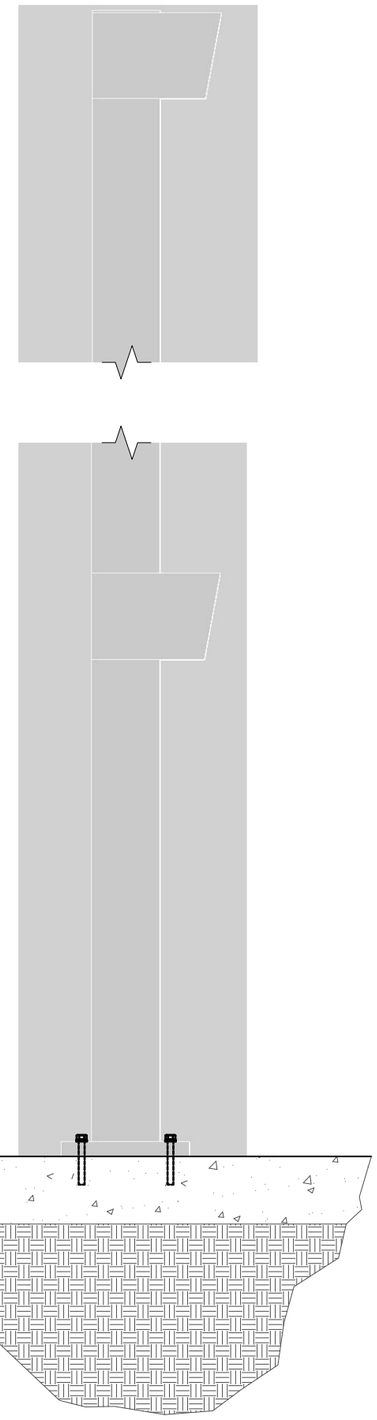

2 SY5.05 | SY5.05 PE MOUNTING POST DETAIL – SIDE VIEW

SCALE: NONE

DRAWING NOTES

1. EACH IR DETECTOR MOUNTING POST SHALL BE CONFIGURED WITH ONE RECEIVER AND ONE TRANSMITTER. THE RECEIVERS AND TRANSMITTERS SHALL BE POSITIONED SO THAT A RECEIVER IS DIRECTLY OPPOSITE OF A TRANSMITTER WHEN THEY ARE INSTALLED.

DRAWING KEY NOTES

1. 3/8" STAINLESS STEEL HILTI KWIK BOLT, 3/8"–16 THREAD WITH EFFECTIVE MINIMUM NOMINAL EMBEDMENT LENGTH OF 2–5/16".

VBS LOCAL CONTRACTOR PACKAGE for CAPE TOWN, SOUTH AFRICA

DRAWING TITLE: DETAILS

PHASE: ☐ 30% ☐ 90% ■ 100% ☐ AS-BUILT

CAD FILE NAME: CPTD505.dwg

DRAWING SCALE: NONE

PROJECT NUMBER: CAPE TOWN–PME–11–15–02

DRAWN BY: JB

DESIGNED BY: RS

DATE: 03/13/15

DRAWING NUMBER: SY5.05

SHEET 14 OF 18

CLASSIFICATION

REV.

DRAWING KEY NOTES

1. TOTAL WEIGHT OF ENCLOSURE WITH HPU IS 4000 POUNDS.
2. 3/8" STAINLESS STEEL HILTI KWIK BOLT, 3/8"–16 THREAD WITH EFFECTIVE MINIMUM NOMINAL EMBEDMENT LENGTH OF 2–5/16".

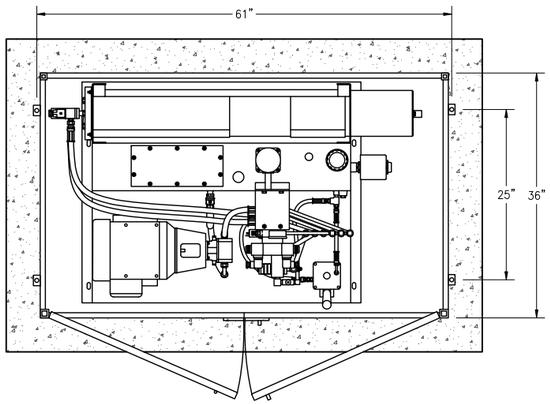

HPU AND ENCLOSURE WITH ROOF REMOVED

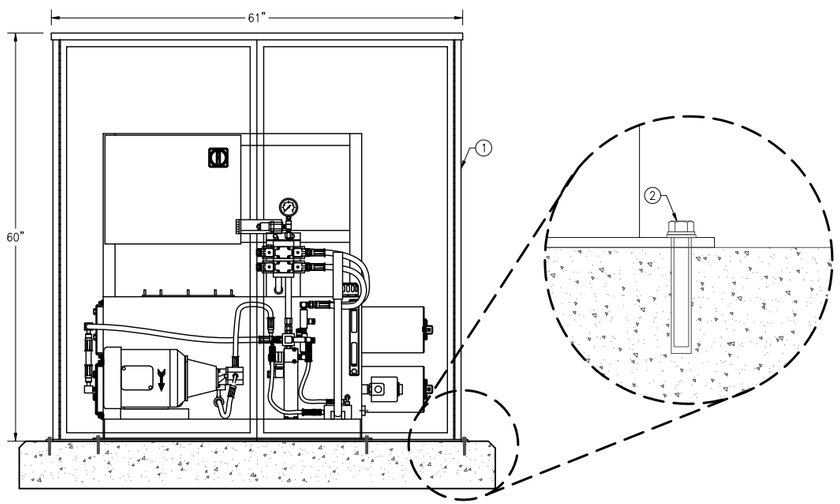

HPU AND ENCLOSURE FRONT ELEVATION

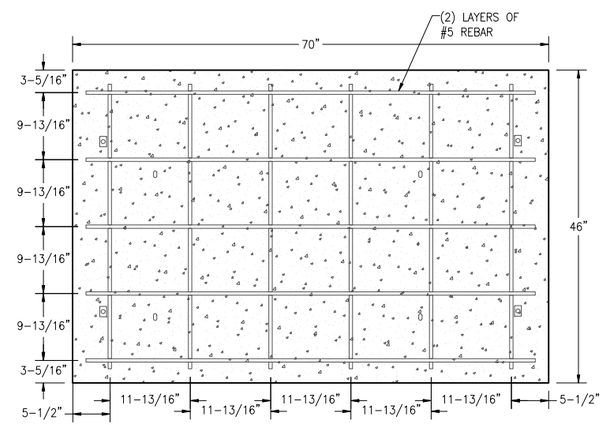

PLAN VIEW

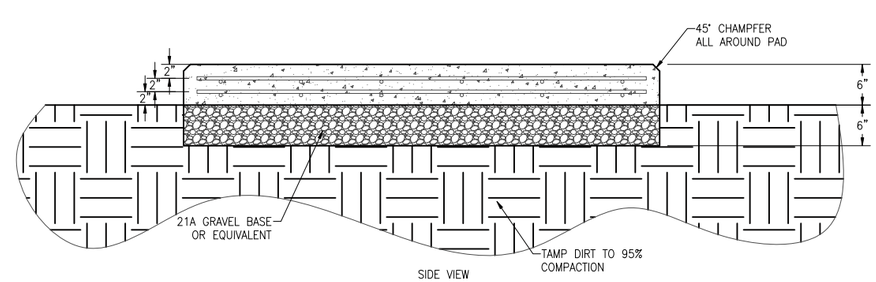

SIDE VIEW

DELTA HPU CONCRETE PAD

1 / SY5.06 | SY5.06 SCALE: NONE

VBS LOCAL CONTRACTOR PACKAGE for CAPE TOWN, SOUTH AFRICA

DRAWING TITLE: DETAILS

PHASE: ☐ 30% ☐ 90% ■ 100% ☐ AS-BUILT

CAD FILE NAME: CPTD506.dwg

DRAWING SCALE: NONE

PROJECT NUMBER: CAPE TOWN–PME–11–15–02

DRAWN BY: JB

DESIGNED BY: RS

DATE: 03/13/15

DRAWING NUMBER: SY5.06

SHEET 15 OF 18

CLASSIFICATION

REV.

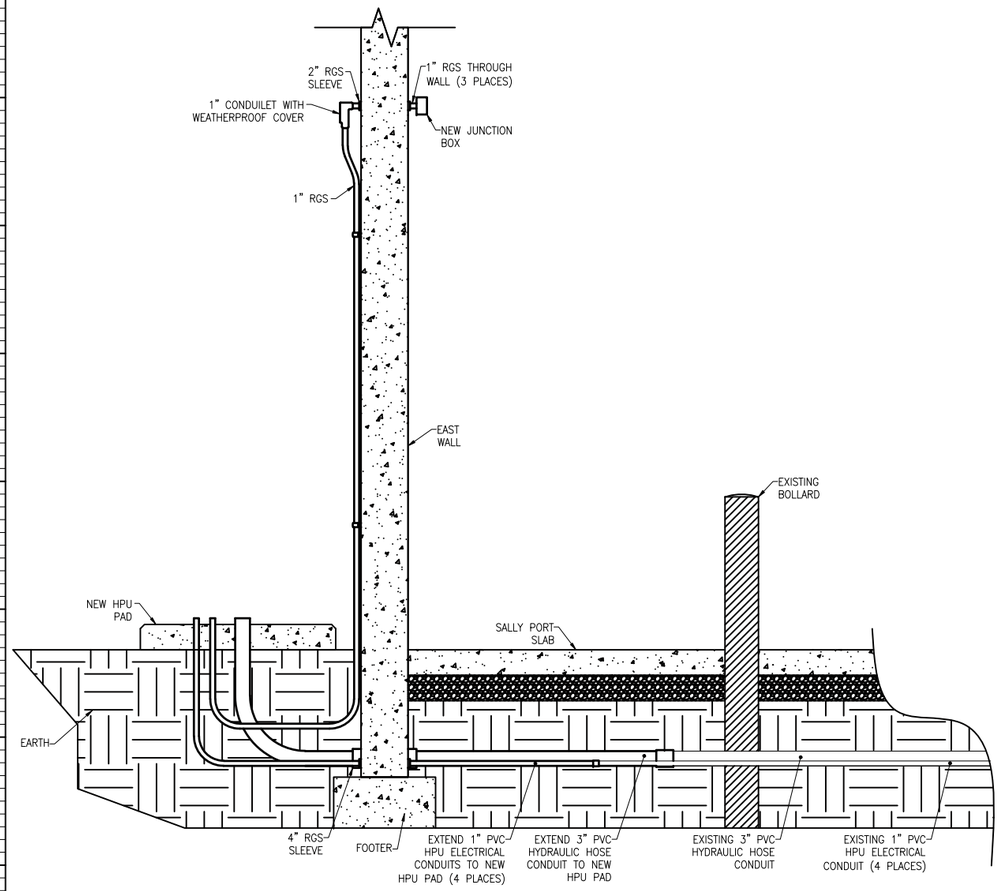

1 SY2.02 SY5.07 BUILDING "M" SALLY PORT EAST WALL – SOUTH ELEVATION

SCALE: NONE

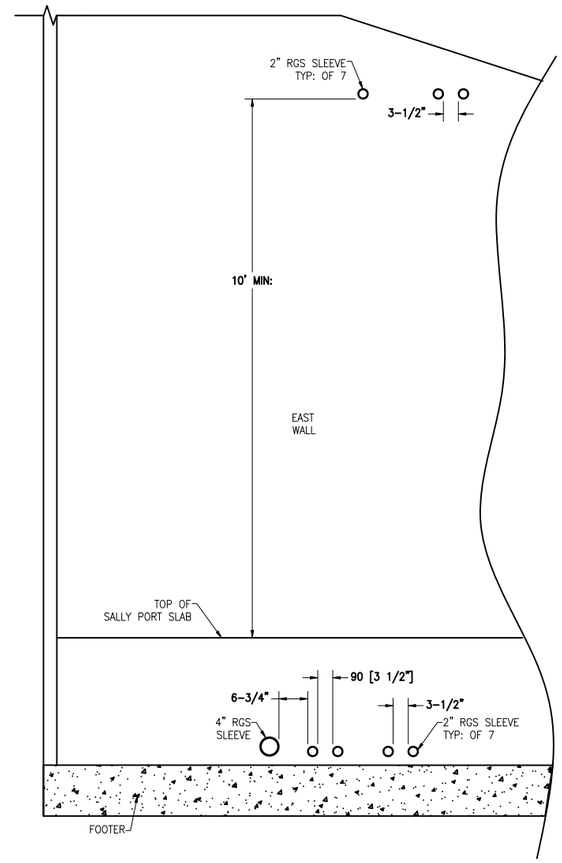

2 SY2.02 SY5.07 BUILDING "M" SALLY PORT EAST WALL – WEST ELEVATION

SCALE: NONE

DRAWING NOTES

1. ACTUAL LOCATION OF SLEEVE TO BE VERIFIED IN THE FIELD.
2. TWO OR MORE ADJACENT PENETRATIONS SHALL BE SPACED A MINIMUM OF 1.5 TIMES THE HOLE DIAMETER, AND MAINTAIN A MINIMUM CLEAR DISTANCE OF 3".

DRAWING KEY NOTES

(1) SOIL SHALL BE TAMPED TO 95% COMPACTION. CONCRETE SLAB SHALL BE RESTORED TO ORIGINAL CONDITION.

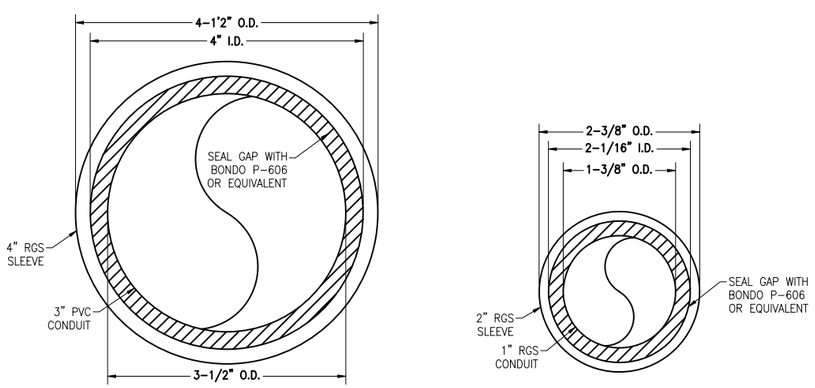

3 SY2.02 SY5.07 SLEEVE DETAIL

SCALE: NONE

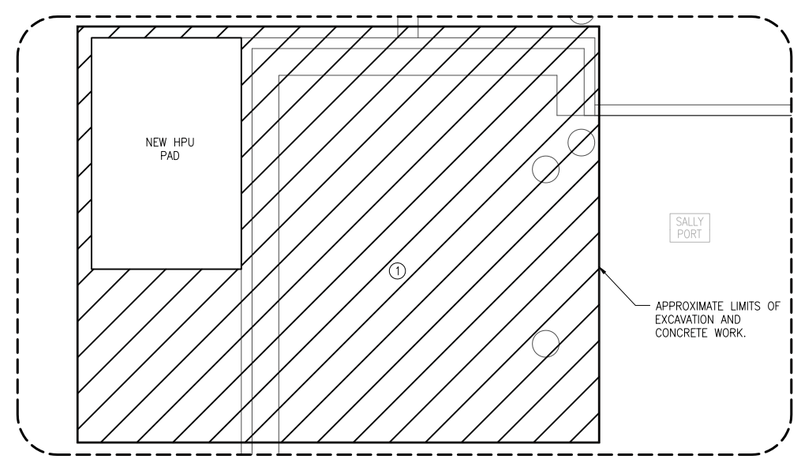

4 SY2.02 SY5.07 AREA OF EXCAVATION

SCALE: NONE

VBS LOCAL CONTRACTOR PACKAGE for CAPE TOWN, SOUTH AFRICA

GRAPHICAL SCALES

DRAWING TITLE: DETAILS

PHASE: ☐ 30% ☐ 90% ■ 100% ☐ AS-BUILT

CAD FILE NAME: CPTD507.dwg

DRAWING SCALE: AS NOTED

PROJECT NUMBER: CAPE TOWN-PME-11-15-02

DRAWN BY: JB

DESIGNED BY: RS

DATE: 03/13/15

DRAWING NUMBER: SY5.07

SHEET 16 OF 18

CLASSIFICATION

REV.

DRAWING KEY NOTES

1. TOTAL WEIGHT OF HPU IS 1500 POUNDS.
2. 3/8" STAINLESS STEEL HILTI KWIK BOLT, 3/8"–16 THREAD WITH EFFECTIVE MINIMUM NOMINAL EMBEDMENT LENGTH OF 2–5/16".

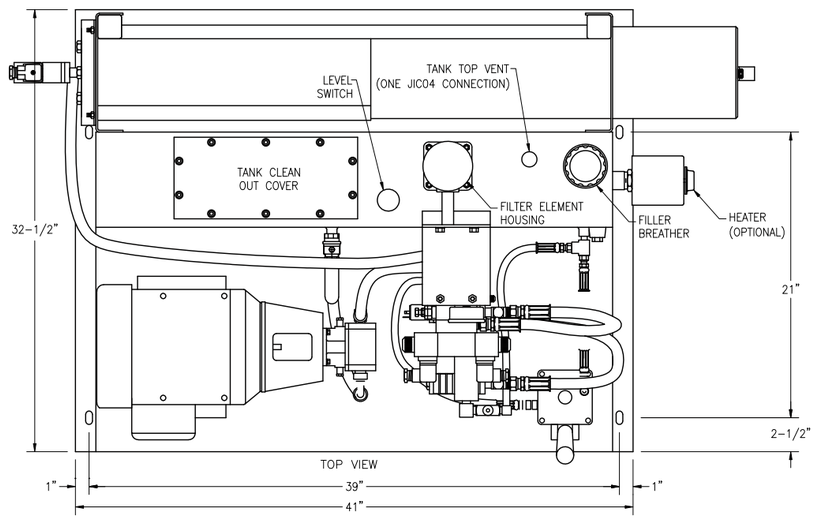

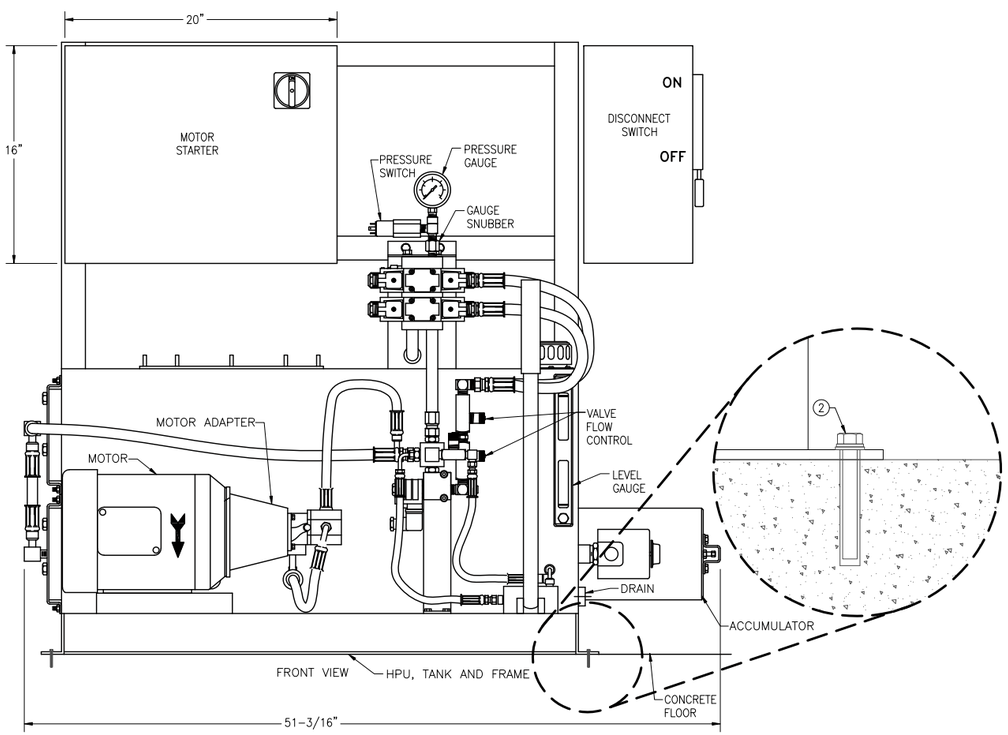

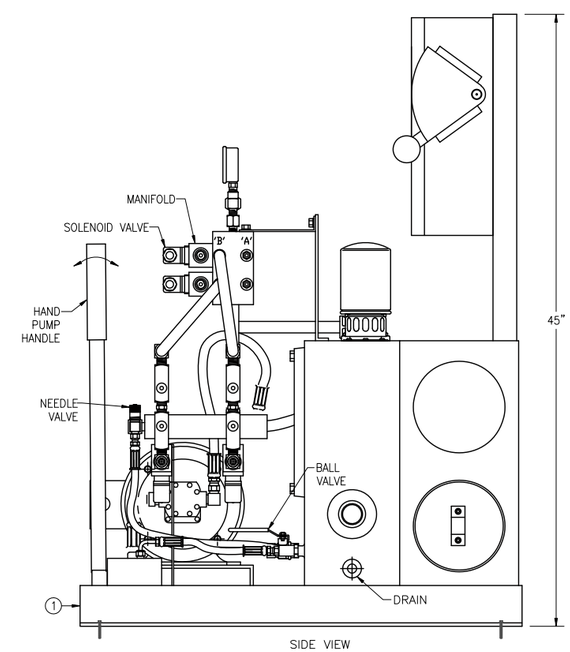

1 SY5.08 | SY5.08 TYPICAL – DELTA HYRAULIC POWER UNIT LAYOUT

SCALE: NONE

VBS LOCAL CONTRACTOR PACKAGE for CAPE TOWN, SOUTH AFRICA

DRAWING TITLE: TYPICAL DELTA HYDRAULIC POWER UNIT LAYOUT

PHASE: ☐ 30% ☐ 90% ■ 100% ☐ AS-BUILT

CAD FILE NAME: CPTD508.dwg

DRAWING SCALE: NONE

PROJECT NUMBER: CAPE TOWN–PME–11–15–02

DRAWN BY: JB

DESIGNED BY: RS

DATE: 03/13/15

DRAWING NUMBER: SY5.08

SHEET 17 OF 18

CLASSIFICATION

REV.

WIRE SCHEDULE

WIRE DESIGNATION	DESCRIPTION	MFT CAT. NO.
A	1 PR/18 AWG	9740
B	2 PR/18 AWG	9156
C	3 PR/18 AWG	8690
D	5 PR/18 AWG	9159
E	6 PR/18 AWG	8691
F	1 PR/12 AWG	9412
G	1 COND/6 AWG, THHN, GREEN, STRANDED	N/A
H	RG-59/U	9259
J	27 PR/22 AWG SHIELDED	8773
K	3 COND/12 AWG	5001UE
L	3 COND/14 AWG	5101UE
M	3 COND/18 AWG	5301UE
N	3 PAIR/22 AWG	9745
O	4 COND/22 AWG, SHIELDED/TWISTED PAIR	8723
P	2 COND/22 AWG	8442
Q	2 PR/22 AWG	9744
R	4 PR/22 AWG	9746
S	(3)1 COND/12 AWG, THHN, SOLID	N/A
T	(3)1 COND/12 AWG, THHN, STRANDED	N/A
U	4 COND/22 AWG, SHIELDED	8729
V	6 STRAND FIBER	WIR725
W	24 STRAND FIBER	WIR727
X	1 PR/18 AWG SHIELDED	8760
Y	(3)COND/6 AWG, THHN, STRANDED	N/A
Z	(3)COND/8 AWG, THHN, STRANDED	N/A
AA	(3)COND/10 AWG, THHN, STRANDED	N/A
BB	6 COND/26 AWG (FLAT CABLE)	30-9994-0000
CC	15 PR/22 AWG	8749
DD	2 STRAND FIBER	WIR724
EE	3 PR/18 AWG SHIELDED	WIR230
GG	2 PR/18 AWG SHIELDED	5341FE
HH	RG-179/STRANDED	WIR617
JJ	3 COND/18 AWG SHIELDED	8770
KK	16 AWG MTW STRANDED (BARRIER USE ONLY)	N/A
LL	14 AWG THWN STRANDED (BARRIER USE ONLY)	N/A
MM	12 AWG THWN STRANDED (BARRIER USE ONLY)	N/A
NN	10 AWG THWN STRANDED (BARRIER USE ONLY)	N/A
OO	CAT-5E TYPE CMXF (BARRIER USE ONLY)	7997A-BLACK
PP	CAT-5E	1583A-GRAY
QQ	CAT-6	7851A - BLUE
SS	1 PR/24 AWG SHIELDED	9841
TT	18 AWG TFFN	N/A
UU	8 AWG THWN STRANDED (BARRIER USE ONLY)	N/A
VV	6 AWG THWN STRANDED (BARRIER USE ONLY)	N/A
WW	12 AWG THWN SOLID (BARRIER USE ONLY)	N/A
XX	-	-
YY	-	-
ZZ	-	-

NOTES:
1. NOT ALL WIRE TYPES LISTED IN THIS SCHEDULE ARE APPLICABLE TO THIS DRAWING PACKAGE.

PULL BOX SCHEDULE

PULL BOX TYPE	DS CAT. NO.	SIZE (LxWxH mm)	SIZE (LxWxH in)	MATERIAL	KNOCKOUT SIZE	HINGE	NEMA RATING **
PB A / A / A	ELE049	100x100x53	4"x4"x2-1/8"	METAL	1"	NO	1
PB D / D / D	ENC205	150x150x100	6"x6"x4"	METAL	N/A	NO	1
PB H / H / H	ENC206	200x200x100	8"x8"x4"	METAL	N/A	NO	1
PB L / L / L	ENC207	250x250x150	10"x10"x6"	METAL	N/A	NO	1
PB N / N / N	ENC208	300x300x100	12"x12"x4"	METAL	N/A	NO	1
PB U / U / U	ENC209	450x450x100	18"x18"x4"	METAL	N/A	NO	1
PB S / S / S	CON097	400x300x100	16"x12"x4"	METAL	N/A	NO	1
PB AA / AA / AA	ENC210	102x102x102	4"x4"x4"	METAL	N/A	NO	3
PB BB / BB / BB	ENC211	152x152x102	6"x6"x4"	METAL	N/A	NO	3
PB CC / CC / CC	PME207	152x152x152	6"x6"x6"	METAL	N/A	NO	3
PB DD / DD / DD	ENC229	203x203x102	8"x8"x4"	METAL	N/A	NO	3
PB FF / FF / FF	ENC283	254x254x152	10"x10"x6"	METAL	N/A	NO	3
PB GG / GG / GG	ENC214	305x305x102	12"x12"x4"	METAL	N/A	NO	3
PB HH / HH / HH	ENC212	305x305x152	12"x12"x6"	METAL	N/A	NO	3
PB JJ / JJ / JJ	ENC215	457x457x102	18"x18"x4"	METAL	N/A	NO	3
PB * / * / *	-	-	-	-	-	-	-

NOTES:
A. DOUBLE LETTER PULL BOX TYPES INDICATE THAT THEY ARE LOCKABLE.

B. DOUBLE LETTER PULL BOX TYPES ENDING WITH AN "X" DESIGNATION WILL BE UPGRADED TO PDS ("AX", "BX", "CX", ETC.)

* FOR USE OF NON-STANDARD PULL BOXES. SIZE TO BE DETERMINED BY DESIGN TEAM-POST SPECIFIC.

** NEMA 1 RATING IS USED FOR INTERIOR CONDITIONS, NEMA 3 RATING IS FOR EXTERIOR CONDITIONS.

VBS LOCAL CONTRACTOR PACKAGE for CAPE TOWN, SOUTH AFRICA

DRAWING TITLE: SCHEDULES

PHASE: ☐ 30% ☐ 90% ■ 100% ☐ AS-BUILT

CAD FILE NAME: CPTD601.dwg

DRAWING SCALE: NONE

PROJECT NUMBER: CAPE TOWN-PME-11-15-02

DRAWN BY: JB

DESIGNED BY: RS

DATE: 03/13/15

DRAWING NUMBER: SY6.01

SHEET 18 OF 18

CLASSIFICATION

REV.