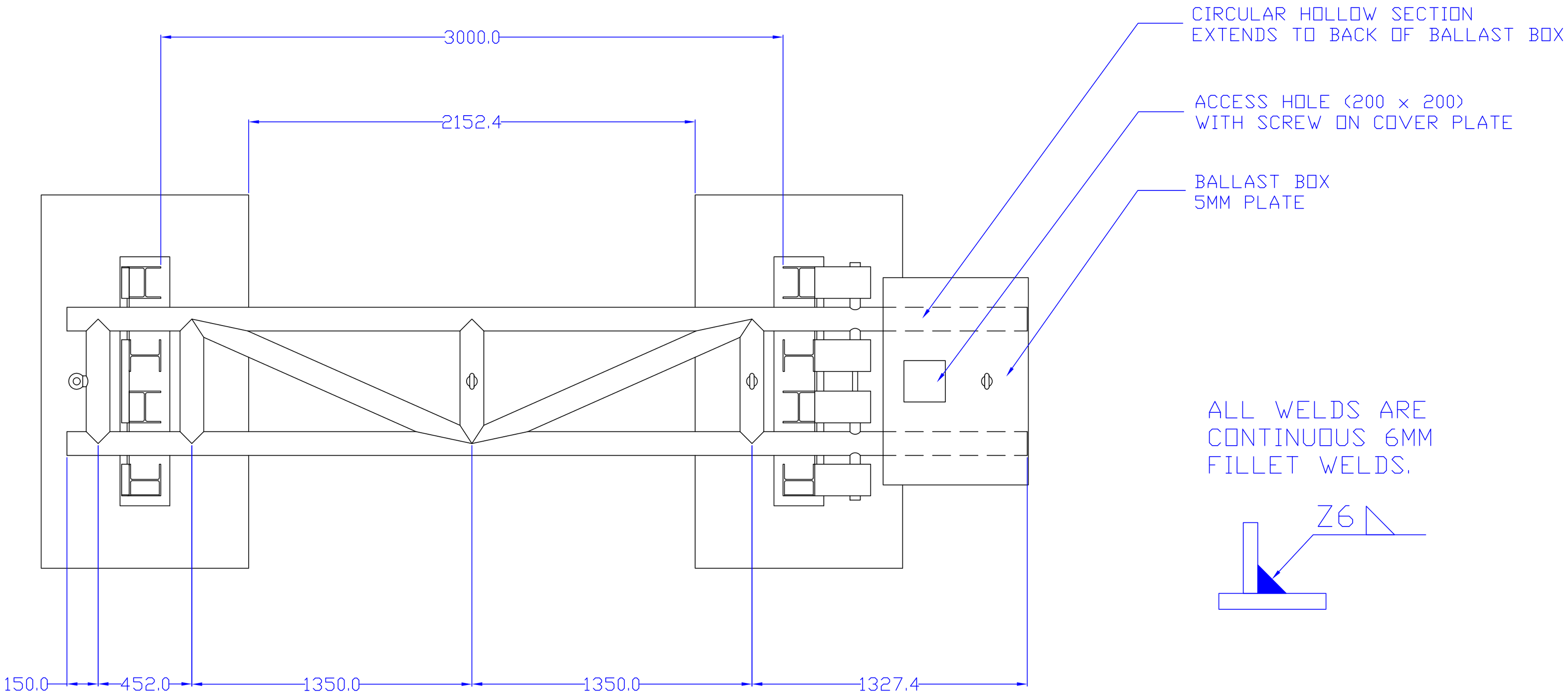

ALL WELDS ARE CONTINUOUS 6MM FILLET WELDS.

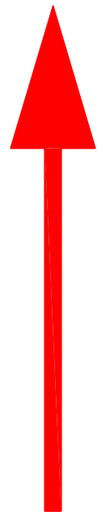

IMPACT DIRECTION

NOTE THE ORIENTATION OF THE UNIVERSAL COLUMNS: THE COLUMNS MUST BE IN THE CONFIGURATION DRAWN RELATIVE TO THE IMPACT DIRECTION.

ALL SECTIONS ARE OF BS STANDARD GRADE STRUCTURAL STEEL, SUBJECT TO AVAILABILITY.

© 2008	Third Angle Projection	TOLERANCES Unless otherwise stated	Orig.Scale A2	Material SEE BILL OF MATERIALS	3			Title TOP ELEVATION	Drawing No.
Drawing based on BS.308		2 Dec Places ±0.1 mm	Drawn Stuart Barker		2				
Dimensions in millimetres		1 Dec Place ±0.5mm	Checked	Finish PAINTED	1	24/06/08		Project MANUAL DROP ARM BARRIER	
Remove all burrs and sharp edges		0 - 1000 ± 1 mm 1000 - 4000 ± 2 mm Over 4000 ± 3 mm	Approved		Issue	Date	Mod.No.		