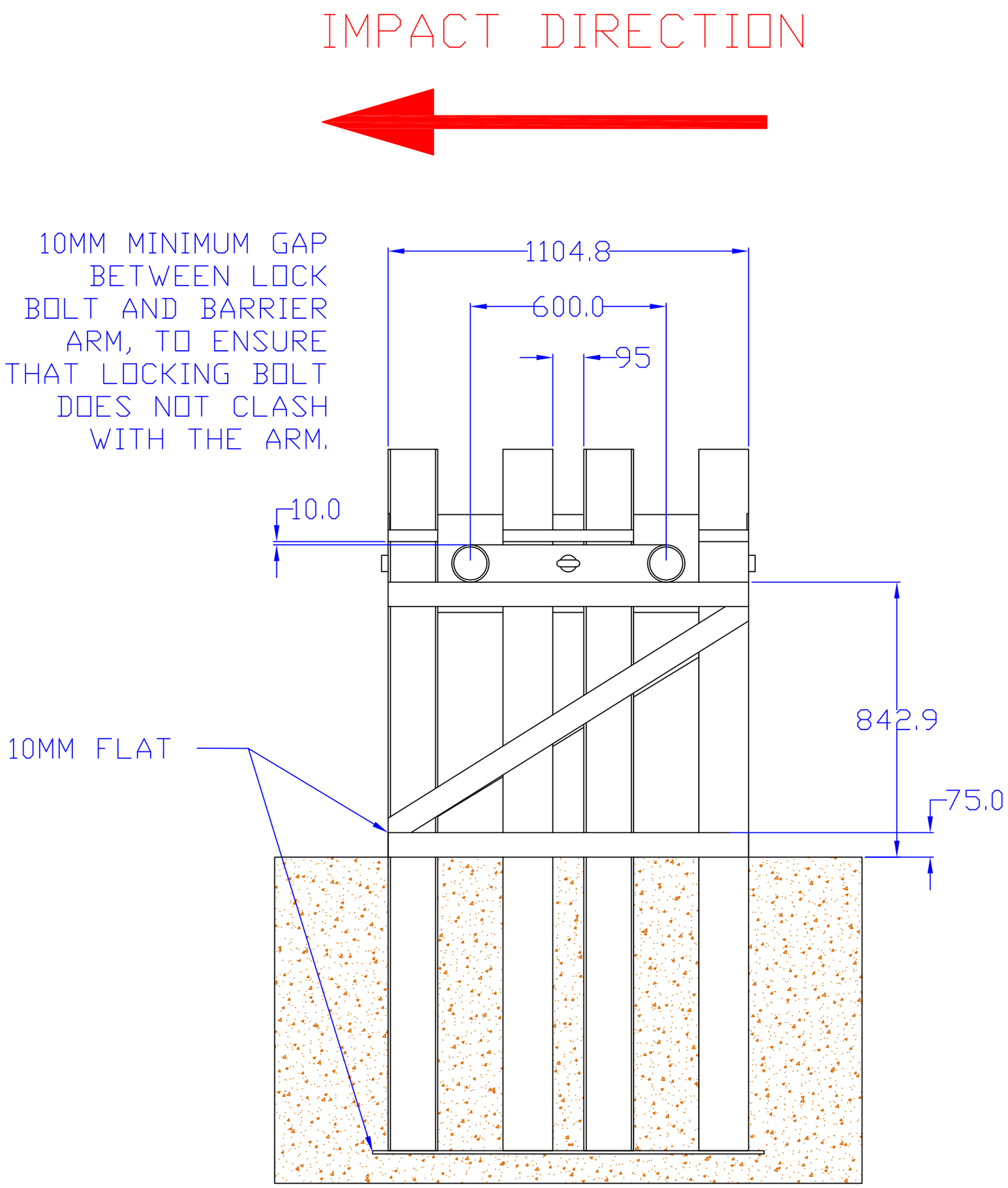

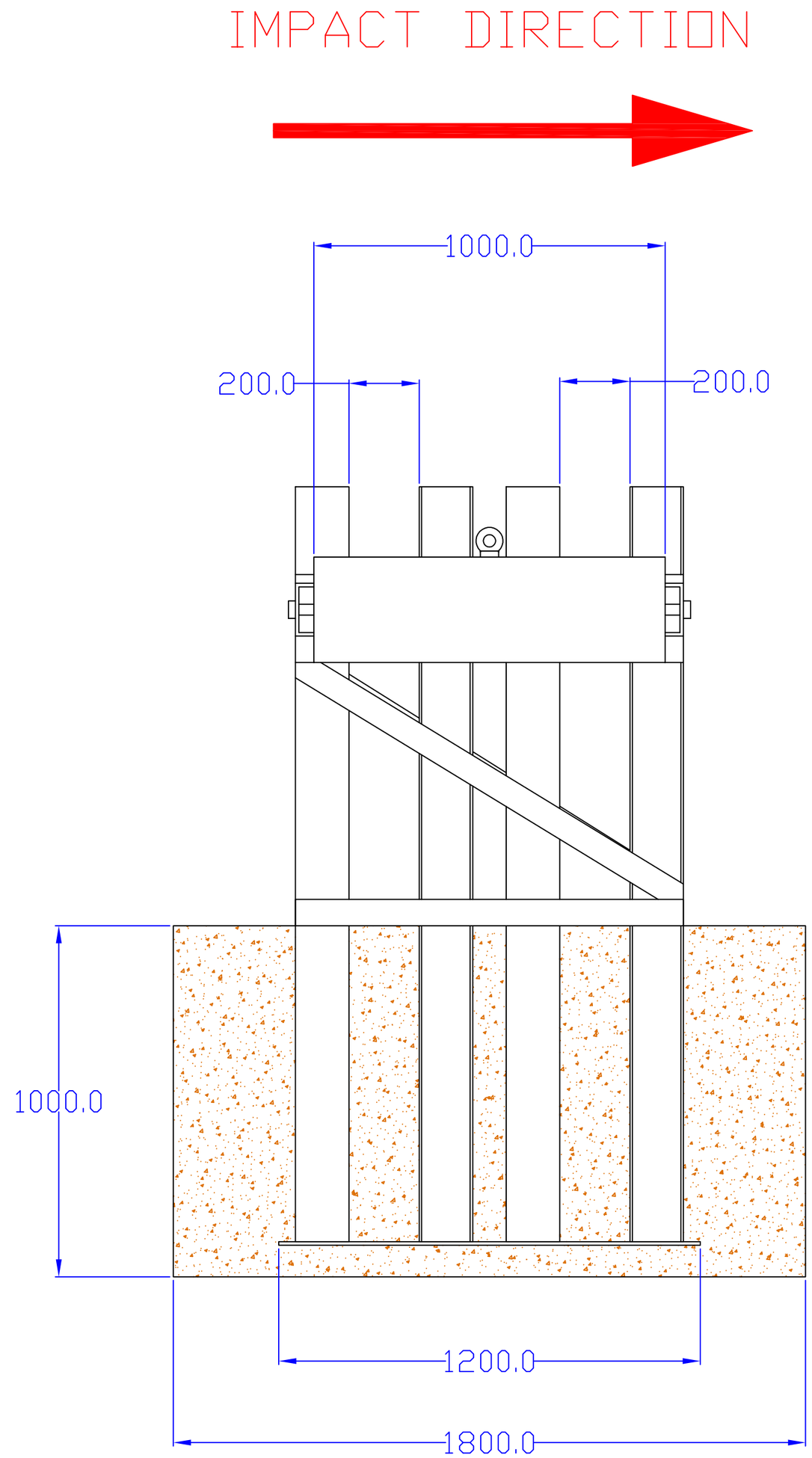

© 2008 Copyright TRL All rights reserved

Drawing based on BS.308
Dimensions in millimetres
Remove all burrs and sharp edges

Third Angle Projection

TOLERANCES
Unless otherwise stated
2 Dec Places ±0.1 mm
1 Dec Place ±0.5mm
0 - 1000 ± 1 mm
1000 - 4000 ± 2 mm
Over 4000 ± 3 mm

Drig.Scale A2
Drawn Stuart Barker
Checked
Approved

Material SEE BILL OF MATERIALS
Finish PAINTED

Issue	Date	Mod.No.
3		
2		
1	24/06/08	

Title LEFT & RIGHT ELEVATION
Project MANUAL DROP ARM BARRIER
Drawing No.