**Isometric View of Manual Drop Arm Barrier**

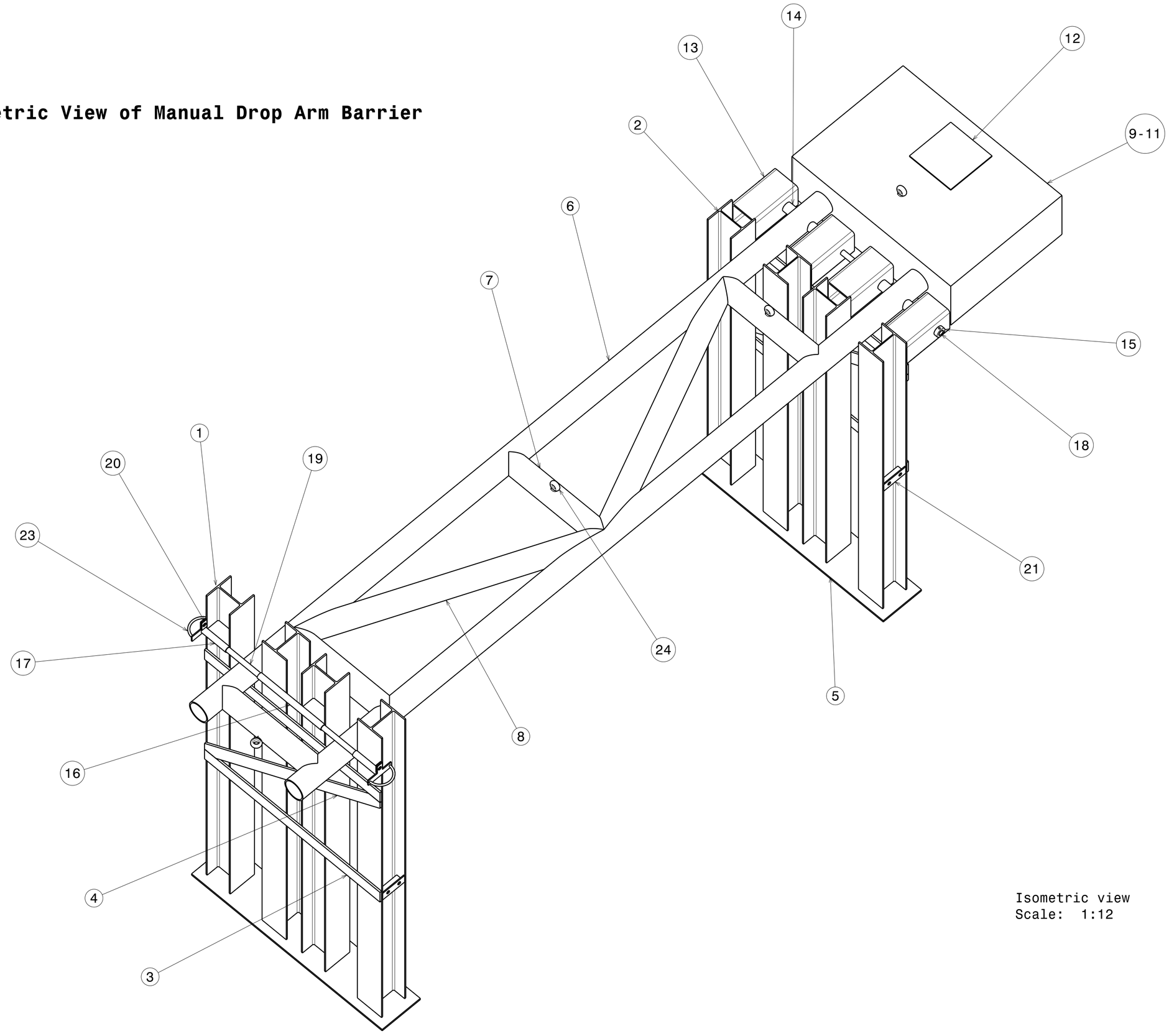


Isometric view
Scale: 1:12