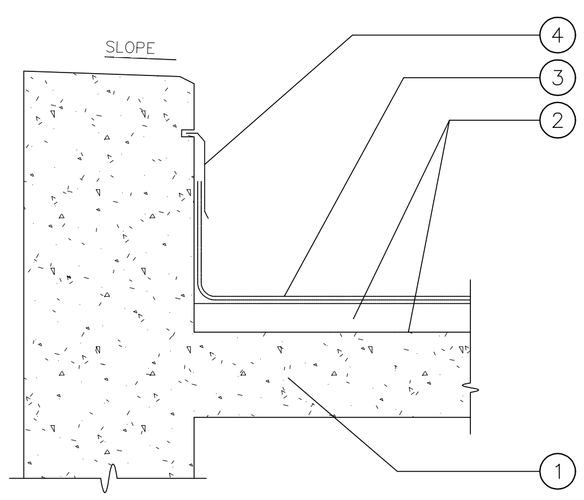

DEMO 1 A07 DTL AT PARAPET
SCALE: 1:10

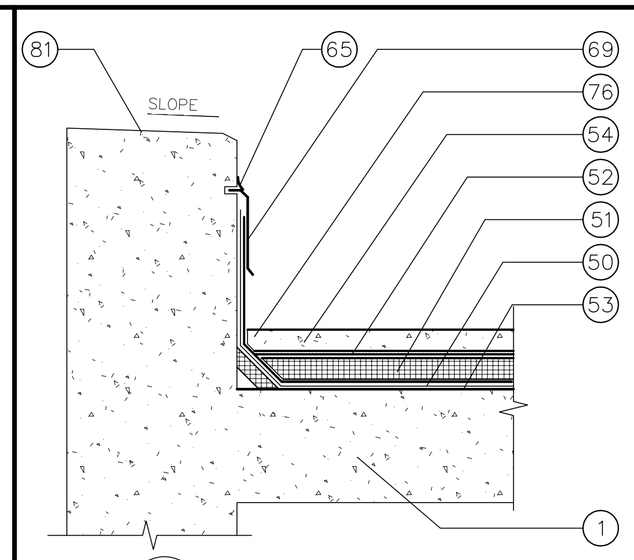

NEW 2 A07 DTL AT PARAPET
SCALE: 1:10

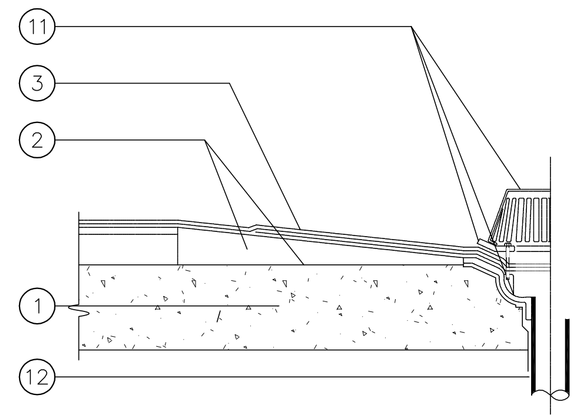

DEMO 3 A07 ROOF DRAIN DETAIL
SCALE: 1:10

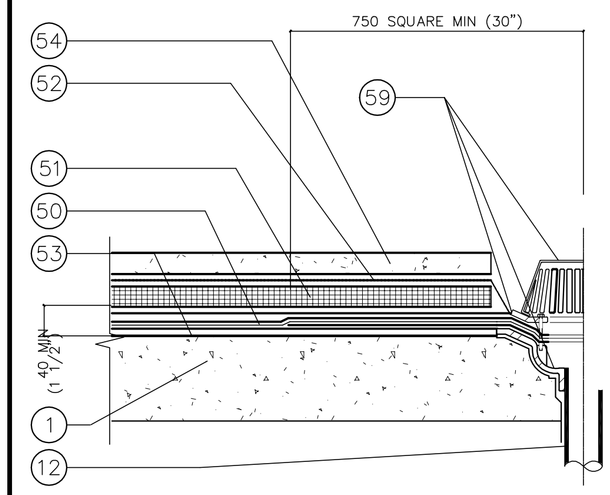

NEW 4 A07 ROOF DRAIN DETAIL
SCALE: 1:10

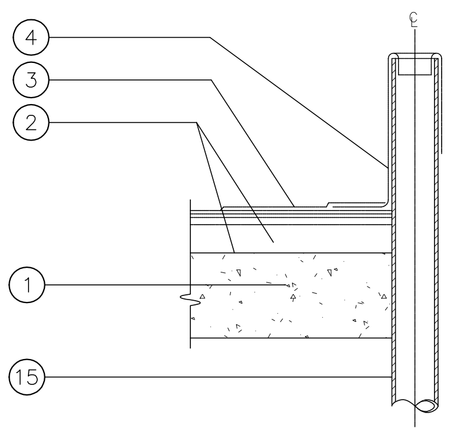

DEMO 5 A07 VENT THRU ROOF
SCALE: 1:10

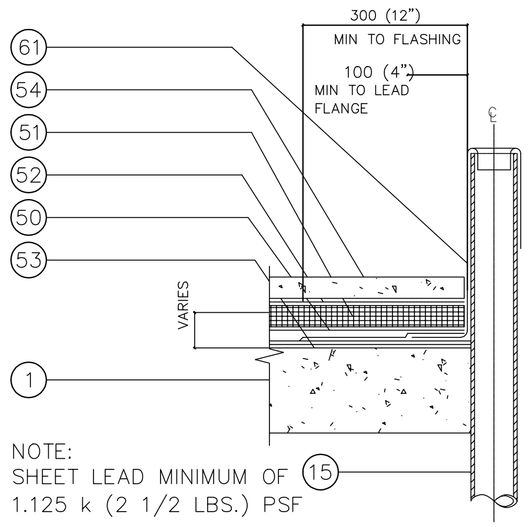

NOTE:
SHEET LEAD MINIMUM OF
1.125 k (2 1/2 LBS.) PSF

NEW 6 A07 VENT THRU ROOF
SCALE: 1:10

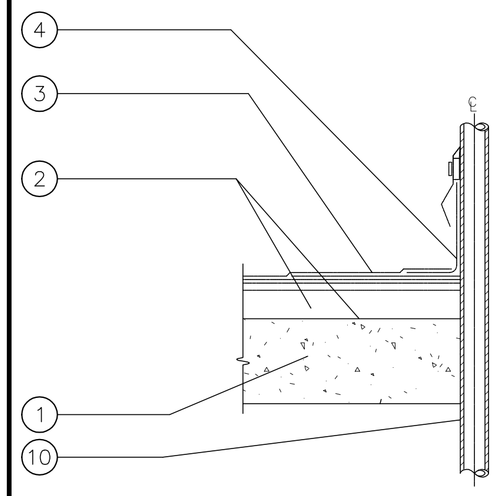

DEMO 7 A07 GOOSENECK PIPE THRU ROOF
SCALE: 1:10

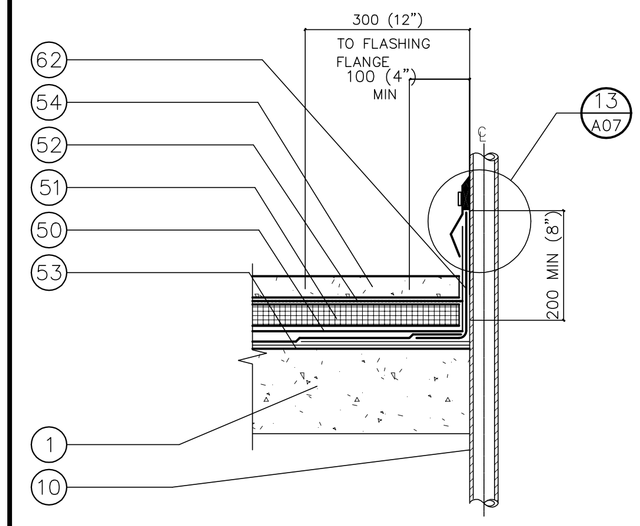

NEW 8 A07 GOOSENECK PIPE THRU ROOF
SCALE: 1:10
(ANTENNA DTL SIMILAR)

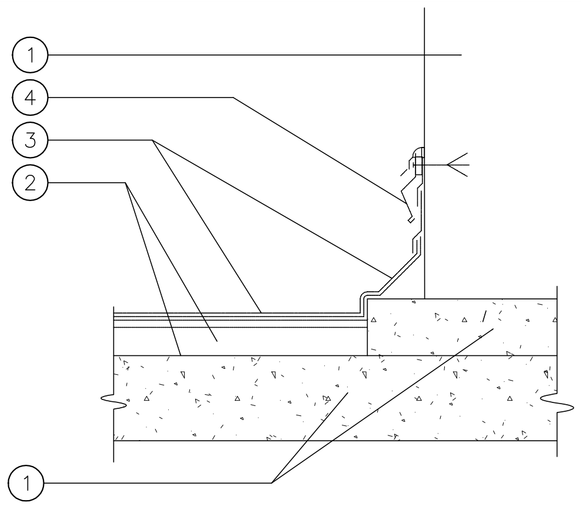

DEMO 9 A07 PUMP HOUSE DTL
SCALE: 1:10

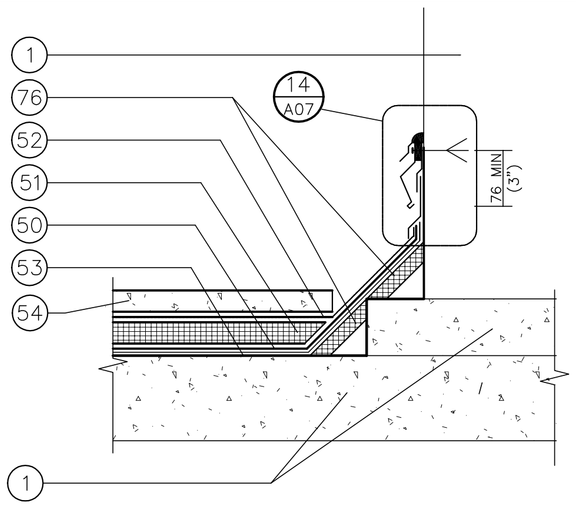

NEW 10 A07 PUMP HOUSE DTL
SCALE: 1:10

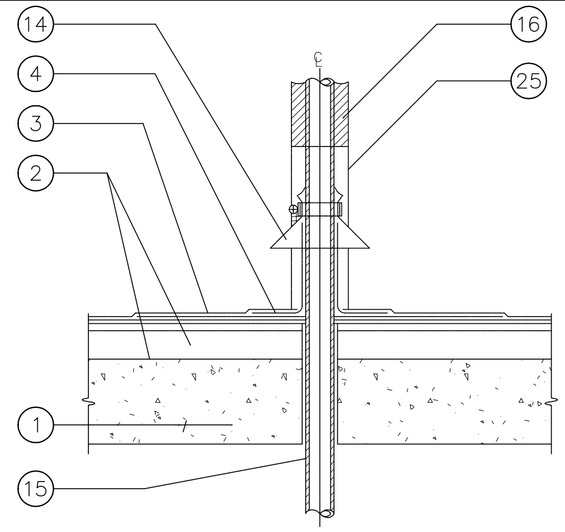

DEMO 11 A07 HOT STACK DETAIL
SCALE: 1:10

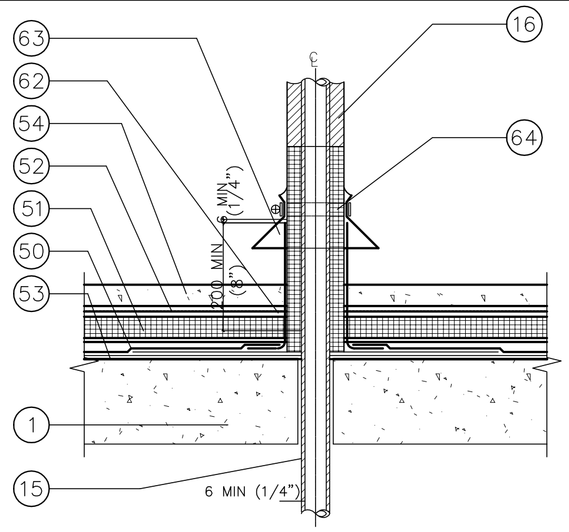

NEW 12 A07 PIPE DETAIL
SCALE: 1:10

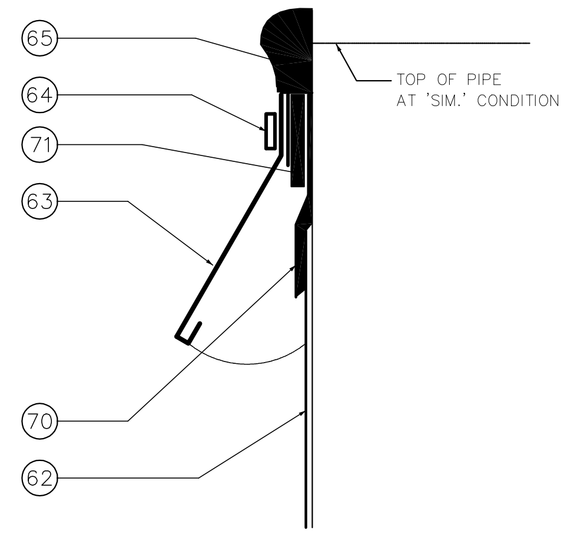

13 A07 COUNTER FLASHING DTL
SCALE: 1:2

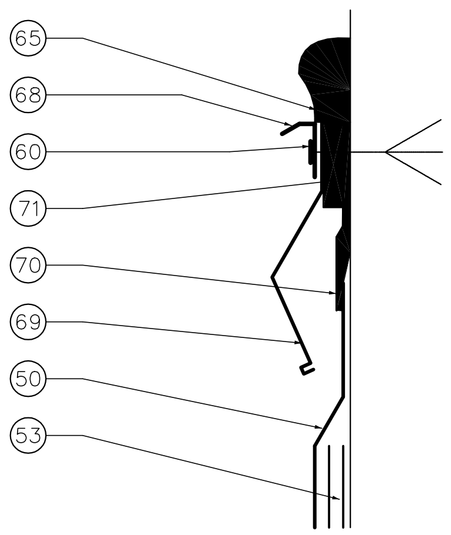

14 A07 COUNTER FLASHING DTL
SCALE: 1:2

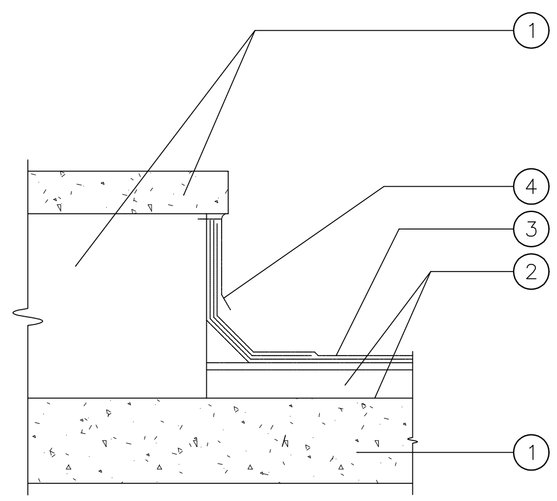

DEMO 15 A07 ANTENNA BASE DTL
SCALE: 1:10

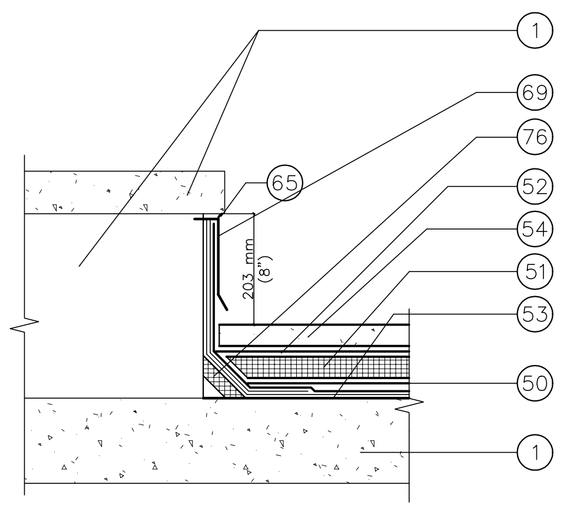

NEW 16 A07 ANTENNA BASE DTL
SCALE: 1:10

REFERENCE NOTES:

(1) ← THIS SYMBOL DENOTES A REFERENCE NOTE AS LISTED BELOW.

1. EXISTING CONCRETE OR ROOF STRUCTURE TO REMAIN.
2. EXISTING RIGID INSULATION IN BITUMEN AND TWO PLY BASE SHEET SHALL BE REMOVED AND CONCRETE SHALL BE PREPARED FOR INSTALLATION OF NEW ROOFING MATERIALS.
3. EXISTING ORIGINAL BUILT-UP ROOF WITH GRAVEL TO BE REMOVED.
4. EXISTING FLASHING TO BE REMOVED.
5. EXISTING EQUIPMENT SHED WALL STRUCTURE TO REMAIN.
6. EXISTING CURB SUPPORT FOR EQUIPMENT SHED TO REMAIN.
7. EXISTING CONCRETE PAD TO REMAIN. SIZES AND CONFIGURATIONS VARY, REFER TO ROOF PLAN.
8. EXISTING ROOF ACCESSORY OR EQUIPMENT BASE TO REMAIN.
9. EXISTING ROOF ACCESSORY OR EQUIPMENT TO REMAIN. REFER TO DEMOLITION PLAN FOR REQUIREMENTS FOR MOVING AND DISCONNECTING UNITS AS REQUIRED FOR DEMOLITION OF EXISTING ROOF AND INSTALLATION OF NEW ROOF.
10. EXISTING GOOSENECK/FLUE TO REMAIN. SIZE VARIES CONTRACTOR TO FIELD VERIFY.
11. EXISTING CLAMPING RING, STRAINER, AND ROOF DRAIN TO BE REMOVED.
12. EXISTING RAIN LEADER TO REMAIN.
13. EXISTING LEAD FLASHING TO BE REMOVED.
14. EXISTING ALUMINUM FLASHING TO BE REMOVED.
15. EXISTING PIPING THRU ROOF AND ROOF DECK TO REMAIN.
16. EXISTING INSULATION ON PIPING TO REMAIN. (IF ANY)
17. EXISTING PIPE OR CONDUIT TO REMAIN.
18. EXISTING ASPHALT PITCH POCKET TO BE REMOVED. ASPHALT SHALL BE REMOVED FROM EXISTING ROOF PENETRATIONS WHICH SHALL BE CLEANED AND PREPARED FOR INSTALLATION OF NEW ROOFING MATERIALS.
19. EXISTING STEEL SUPPORT ANGLE TO REMAIN.
20. VENT STACK THRU.
21. EXISTING PIPE SUPPORT TO REMAIN UNLESS OTHERWISE NOTED.
22. EXISTING ROOF ACCESSORY BASE TO REMAIN.
23. EXISTING PARAPET WALL TO REMAIN.
24. EXISTING BUILT-UP ROOF SYSTEM, GRAVEL AND FLASHINGS TO BE REMOVED. REMOVE EXISTING PARGING OVER FLASHING AS REQUIRED TO REMOVE FLASHINGS.
25. REMOVE EXISTING INSULATION (IF ANY) ABOVE ROOF TO ALLOW FOR INSTALLATION OF NEW FLASHINGS PER DETAIL 11/A-07.
26. CLEAN AND PREP CONCRETE SURFACE.
27. EXISTING DUCTWORK TO REMAIN.
28. EXISTING WAREHOUSE WALL, BEYOND.
29. EXISTING BLOCKING MATERIAL TO BE REMOVED.

50. POLYETHYLENE SLIP SHEET
51. 38 mm(1 1/2") THICK EXTRUDED POLYSTYRENE INSULATION W/ GROOVES. INSTALL W/ GROOVED ON BOTTOM SURFACE OF INSULATION
52. FILTER FABRIC PROTECTION SHEET.
53. MODIFIED BITUMEN ROOF SYSTEM.
54. 609mm x 1219mm x 25mm (24" x 48" x 1") THICK TONGUE AND GROOVE CONCRETE PAVERS AND PROTECTION BOARDS
55. NOT USED
56. ROOF DRAIN LEAD FLASHING SET IN MASTIC.
57. INSTALL EPOXY GROUT AROUND PERIMETER OF NEW ROOF DRAIN BASE.
58. NOT USED
59. NEW ROOF DRAIN BASE, CLAMPING RING AND STRAINER INSTALLED TO MATCH EXISTING. SET NEW BASE IN EPOXY GROUT. NEW ROOF DRAINS SHALL BE SET AT AN ELEVATION TO ALLOW INSTALLATION OF A MINIMUM THICKNESS OF 40 mm (1 1/2") RIGID INSULATION. CONNECT NEW BASE TO EXISTING RAIN LEADER.
60. 7 mm (1/4") X 38 mm (1 1/2") ANCHOR SCREWS INTO EXPANSION SHIELDS AT 400 mm (16") OC MAX DRILL ANCHORS INTO EXISTING CONCRETE AT CONCRETE PADS AND CURBS.
61. LEAD FLASH. ROLL INTO TOP OF VENT AND DOWN 25mm (1"), SET FLANGE IN MASTIC ON ROOFING.
62. LEAD FLASHING ROOF JACK TO EXTEND A MINIMUM OF 200mm (8") ABOVE ROOF SURFACE. 75mm (3") MIN. TO 100mm (4") MAXIMUM FLANGE SET IN MASTIC OVER ROOF SURFACE.
63. WEATHER TIGHT 1.6 (14 GA) ALUMINUM (3003-H14) UMBRELLA. UMBRELLA SHALL OVERLAP
64. ROOF JACK BY A RADIUS OF 75mm (3") MINIMUM TO 100mm (4") MAXIMUM. CONT. STAINLESS STEEL DRAW BAND DESIGNED TO CLAMP TIGHTLY TO ROOF SURFACE.
65. CONT. BEAD OF ELASTOMERIC SEALANT.
66. PROVIDE NEW PIPING INSULATION ABOVE AND BELOW UMBR#<?,ELLA TO REPLAC#<?,E REMOVED IN#<?,SULATI#<?,ON Xb?XY?X????B?\U#<?,+2039(IF ANY). NEW INSULATION SHALL MATCH EXISTING INSUL#<?,ATION IN THICKNESS AND TYPE.
67. 1.6 (14 GA) ALUMINUM (3003#<?,-H14) FLASHING CAP SET IN MASTIC.(3003#003#<?,<?,
68. 0.80 CLAMPING BAR W/ SLOTTED ANCHOR HOLES & SLOPED CAP.
69. 0.80 ALUMINUM COUNTER FLASHING.
70 FABRIC TAPE SET IN MASTIC SEALANT TO SEAL TOP OF FLASHING.
71. COMPRESSIBLE ELASTOMERIC TAPE, CONT.
72. 5mm (3/16") X 45mm (1 3/4") LONG STAINLESS STEEL SCREW FASTENERS IN CURB AT 400mm (16") O.C. MAXIMUM SPACING. PROVIDE SHIELD INSERTS AS REQUIRED.
73. NOT USED
75. 500mm (20") X 500mm (20") PROTECTION BOARD.
76. PRE-FORMED FIBER CANT STRIP SET IN MASTIC.
77. CONTINUOUS WOOD NAILER. SET NAILER IN HEAVY COAT OF ROOFING CEMENT. PROVIDE BLOCKING AND INSTALL CONTINUOUS WOOD NAILER FLUSH WITH TOP OF INSULATION.
78. NOT USED
79. TREATED 2x WOOD FRAMING CONSTRUCTED TO SIZE REQUIRED TO PROVIDE BACKING FOR FLASHING. SET NAILER IN HEAVY COAT OF ROOFING CEMENT.
80. OVERLAP MEMBRANE FROM ABOVE AND HEAT AND PRESS INTO PLACE TO PROVIDE A WATERTIGHT BOND.
81. APPLY ELASTOMERIC COATING ON EXPOSED CONCRETE.
82. COMPRESSIBLE INSULATION AS RECOMMENDED BY ROOFING MANUFACTURER OR N.R.C.A.
83. NEOPRANE VAPOR (6 MIL MIN.) RETARDER SECURED TO TOP OF CURB.
84. BELLOWS EXPANSION FLASHING CAP. FASTEN TO CURB W/ GASKETED FASTENERS
85. METAL FASTENERS WITH NEOPRENE WASHERS AT 200 mm (8") O.C.
86. GASKETED FASTENERS AT 200 mm (8") O.C.
87. SHEET METAL REGLET.
88. PREFORMED RUBBERIZED BOOT SIZED TO PIPE DIAMETER. SET BOOT IN MASTIC AND SEAL ALL OPENINGS WITH APPROVED ADHESIVE.
89. 0.08 ALUMINUM FLASHING COLLAR MINIMUM OF 200 mm (8") ABOVE ROOFING. 6 mm (1/4") MIN. CLEARANCE BETWEEN FLASHING COLLAR AND SUPPORT.
90. EMBEDDED EDGE METAL FLASHING. (GRAVEL STOP)
91. ELASTOMERIC BELLOWS.
92. SEISMIC JOINT COVER.
93. 25mm(1") RIGID (PERLITE) INSULATION BOARD. MECHANICALLY ATTACH TO METAL DECKING.