AMENDMENT OF SOLICITATION/MODIFICATION OF CONTRACT	1. CONTRACT ID CODE	PAGE OF PAGES 1 | 87

2. AMENDMENT/MODIFICATION NO.	3. EFFECTIVE DATE	4. REQUISITION/PURCHASE REQ. NO.	5. PROJECT NO. *(If applicable)*
001	3/22/2013		

6. ISSUED BY CODE	7. ADMINISTERED BY *(If other than Item 6)* CODE
Contracting Officer American Consulate General Mai Kolachi Road Karachi	

8. NAME AND ADDRESS OF CONTRACTOR *(NO., street,city,county,State,and ZIP Code)*	9a. AMENDMENT OF SOLICITATION NO.
	SPK400-13-R-5003
	9b. DATED *(SEE ITEM 11)* 02/27/2013
	10a. MODIFICATION OF CONTRACT/ORDER NO.
	10b. DATED *(SEE ITEM 13)*

11. THIS ITEM ONLY APPLIES TO AMENDMENTS OF SOLICITATIONS

[ ] The above numbered solicitation is amended as set forth in Item 14. The hour and date specified for receipt of Offers
[ ] is extended, [ ] is not extended

Offers must acknowledge receipt of this amendment prior to the hour and date specified in the solicitation or as amended, by one of the following methods: (a) By completing Items 8 and 15, and returning _____ copies of the amendment;(b) By acknowledging receipt of this amendment on each copy of the offer submitted; or(c) By separate letter or telegram which includes a reference to the solicitation and amendment numbers. **FAILURE OF YOUR ACKNOWLEDGMENT TO BE RECEIVED AT THE PLACE DESIGNATED FOR THE RECEIPT OF OFFERS PRIOR TO THE HOUR AND DATE SPECIFIED MAY RESULT IN REJECTION OF YOUR OFFER.** If by virtue of this amendment you desire to change an offer already submitted, such change may be made by telegram or letter, provided each telegram or letter makes reference to the solicitation and this amendment, and is received prior to the opening hour and date specified.

12. ACCOUNTING AND APPROPRIATION DATA *(If required)*

13. THIS ITEM APPLIES ONLY TO MODIFICATIONS OF CONTRACTS/ORDERS, IT MODIFIES THE CONTRACT/ORDER NO. AS DESCRIBED IN ITEM 14.

	A. THIS CHANGE ORDER IS ISSUED PURSUANT TO: *(Specify authority)* THE CHANGES SET FORTH IN ITEM 14 ARE MADE IN THE CONTRACT ORDER NO. IN ITEM 10A.
	B. THE ABOVE NUMBERED CONTRACT/ORDER IS MODIFIED TO REFLECT THE ADMINISTRATIVE CHANGES *(such as changes in paying office, appropriation date, etc.)* SET FORTH IN ITEM 14, PURSUANT TO THE AUTHORITY OF FAR 43.103(b)
	C. THIS SUPPLEMENTAL AGREEMENT IS ENTERED INTO PURSUANT TO AUTHORITY OF:
X	D. OTHER *(Specify type of modification and authority) Change in SOW and Drawings and Submission date.*

E. **IMPORTANT:** Contractor [ ] is not, [ ] is required to sign this document and return ____ copies to the issuing office.

14. DESCRIPTION OF AMENDMENT/MODIFICATION *(Organized by UCF section headings, including solicitation/contract subject matter where feasible.)*

Solicition no. SPK400-13-R-5003 is hereby amended to changes in Scope of Work & Drawings.

Except as provided herein, all terms and conditions of the document referenced in Item 9A or 10A, as heretofore changed, remains unchanged and in full force and effect.

15A. NAME AND TITLE OF SIGNER *(Type or print)*		16A. NAME OF CONTRACTING OFFICER Bernard Gresham	
15B. NAME OF CONTRACTOR/OFFEROR BY _____ *(Signature of person authorized to sign)*	15C.DATE SIGNED	16B. UNITED STATES OF AMERICA BY _____ *(Signature of Contracting Officer)*	16C DATE SIGNED 3-21-2013

SECTION B - SUPPLIES OR SERVICES

AND PRICES/COSTS

B.1 CONTRACT PRICE

The contractor shall complete all work (including furnishing all labor, material, equipment and services) required under this contract for the following firm fixed price and within the time specified. This price shall include all labor, materials, overhead (including insurance required by FAR 52.228-4, Workers' Compensation and War-Hazard Insurance, which shall be a direct reimbursement), and profit.

_____ Total Price

B.2 TYPE OF CONTRACT

This is a firm fixed price contract payable entirely in the currency indicated in the SF1442. No additional sums will be payable for any escalation in the cost of materials, equipment or labor, or because of the contractor's failure to properly estimate or accurately predict the cost or difficulty of achieving the results required. The Government will not adjust the contract price due to fluctuations in currency exchange rates. The Government will only make changes in the contract price or time to complete due to changes made by the Government in the work to be performed, or by delays caused by the Government.

The Government will make payments based on quantities and unit prices only to the extent specifically provided in the contract.

SECTION C - DESCRIPTION/SPECIFICATIONS

STATEMENT OF WORK

C.1 CHARACTER AND SCOPE OF WORK

The Contractor shall furnish and install all materials required by this contract. The contract drawings are set forth in Section J as Attachment 3 and the Specifications/Statement of Work are set forth in Section J as Attachment 4.

C.2 DRAWINGS

In case of differences between small and large-scale drawings, the latter will govern. Where a portion of the work is drawn in detail and the remainder of the work is indicated in outline, the parts drawn in detail shall apply also to all other portions of the work.

SECTION D - PACKAGING AND MARKING

D.1 The Contractor shall mark materials delivered to the site as follows:

Contracting Officer's Representative
The American Consulate General
Plot No. 3-5, Mai Kolachi Road
Karachi, Pakistan

SECTION E - INSPECTION AND ACCEPTANCE

E.1 FAR 52.252-2 CLAUSES INCORPORATED BY REFERENCE (FEB 1998)

This contract incorporates one or more clauses by reference, with the same force and effect as if they were given in full text. Upon request, the Contracting Officer will make their full text available. Also, the full text of a clause may be accessed electronically at

http://acquisition.gov/far/index.html or, http://farsite.hill.af.mil/search.htm

These addresses are subject to change. If the Federal Acquisition Regulation (FAR) is not available at the locations indicated above, use the Dept. of State Acquisition Website at

http://www.statebuy.state.gov/ to see the links to the FAR. You may also use an Internet "search engine" (such as, Yahoo, Excite, Alta Vista, etc.) to obtain the latest location of the most current FAR.

FEDERAL ACQUISITION REGULATION (48 CFR CH. 1)

52.246-12	INSPECTION OF CONSTRUCTION	AUG 1996

E.2 QUALITY ASSURANCE

The Contractor shall institute an appropriate inspection system set forth in a Quality Assurance Plan. The plan shall include checklists of duties to be carried out, ensuring these duties are carried out by the supervisory staff and senior employees, and carrying out weekly inspections to determine whether the various services are being performed according to the contract. The Contractor shall provide copies of the weekly inspection reports to the COR.

The Contractor shall correct and improve promptly any shortcomings and substandard conditions noted during inspections. The Contractor shall bring any conditions beyond the responsibility of the Contractor to the attention of the Contracting Officer or COR.

E.2.1 MONTHLY REPORT: The Contractor shall submit to the COR a monthly progress report, along with the monthly invoice, summing up observations resulting from the inspections, progress, difficulties or irregularities encountered, resolution of problems, measures taken to improve conditions, recommendations, and other matters related to this contract.

E.2.2. INSPECTION BY GOVERNMENT: The COR, or his/her authorized representatives, will inspect from time to time the services being performed and the supplies furnished to determine whether work is being performed in a satisfactory manner, and that all supplies are of acceptable quality and standards.

The Contractor shall be responsible for any countermeasures or corrective action, within the scope of this contract, which may be required by the Contracting Officer as a result of such inspection.

E.3 SUBSTANTIAL COMPLETION

E.3.1 DEFINITIONS

(a) "Substantial Completion" means the stage in the progress of the work as determined and certified by the Contracting Officer in writing to the Contractor, on which the work (or a portion designated by the Government) is sufficiently complete and satisfactory. Substantial completion means that the property may be occupied or used for the purpose for which it is intended, and only minor items such as touch-up, adjustments, and minor replacements or installations remain to be completed or corrected which:

1. do not interfere with the intended occupancy or utilization of the work, and

2. can be completed or corrected within the time period required for final completion.

(b) The "date of substantial completion" means the date determined by the Contracting Officer or authorized Government representative as of which substantial completion of the work has been achieved.

E.3.2 USE AND POSSESSION UPON SUBSTANTIAL COMPLETION

The Government shall have the right to take possession of and use the work upon substantial completion. Upon notice by the Contractor that the work is substantially complete (a Request for Substantial Completion) and an inspection by the Contracting Officer or an authorized Government representative (including any required tests), the Contracting Officer shall furnish the Contractor a Certificate of Substantial Completion. The certificate shall be accompanied by a Schedule of Defects listing items of work remaining to be performed, completed or corrected before final completion and acceptance. Failure of the Contracting Officer to list any item of work shall not relieve the Contractor of responsibility for complying with the terms of the contract. The Government's possession or use upon substantial completion shall not be deemed an acceptance of any work under the contract.

E.4 FINAL COMPLETION AND ACCEPTANCE

E.4.1 DEFINITIONS

(a) "Final completion and acceptance" means the stage in the progress of the work as determined by the Contracting Officer and confirmed in writing to the Contractor, at which all work required under the contract has been completed in a satisfactory manner, subject to the discovery of defects after final completion, and except for items specifically excluded in the notice of final acceptance.

(b) The "date of final completion and acceptance" means the date determined by the Contracting Officer when final completion of the work has been achieved, as indicated by written notice to the Contractor.

E.4.2 FINAL INSPECTION AND TESTS

The Contractor shall give the Contracting Officer at least five (5) days advance written notice of the date when the work will be fully completed and ready for final inspection and tests. Final inspection and tests will be started not later than the date specified in the notice unless the Contracting Officer determines that the work is not ready for final inspection and so informs the Contractor.

E.4.3 FINAL ACCEPTANCE

If the Contracting Officer is satisfied that the work under the contract is complete (with the exception of continuing obligations), the Contracting Officer shall issue to the Contractor a notice of final acceptance and make final payment upon:

(a) satisfactory completion of all required tests,

(b) a final inspection that all items by the Contracting Officer listed in the Schedule of Defects have been completed or corrected and that the work is finally complete (subject to the discovery of defects after final completion), and

(c) submittal by the Contractor of all documents and other items required upon completion of the work, including a final request for payment (Request for Final Acceptance).

SECTION F - DELIVERIES OR PERFORMANCE

F.1 FAR 52.252-2 CLAUSES INCORPORATED BY REFERENCE (FEB 1998)

This contract incorporates one or more clauses by reference, with the same force and effect as if they were given in full text. Upon request, the Contracting Officer will make their full text available. Also, the full text of a clause may be accessed electronically at:

http://acquisition.gov/far/index.html or, http://farsite.hill.af.mil/search.htm

These addresses are subject to change. If the Federal Acquisition Regulation (FAR) is not available at the locations indicated above, use the Dept. of State Acquisition Website at http://www.statebuy.state.gov/ to see the links to the FAR. You may also use an Internet "search engine" (such as, Yahoo, Excite, Alta Vista, etc.) to obtain the latest location of the most current FAR.

FEDERAL ACQUISITION REGULATION (48 CFR CH. 1)

52.242.14	SUSPENSION OF WORK	APR 1984

F.2 52.211-10 COMMENCEMENT, PROSECUTION, AND COMPLETION OF WORK (APR 1984)

The Contractor shall be required to:

(a) Commence work under this contract within ***10 working*** days after the date the Contractor receives the notice to proceed,

(b) Prosecute the work diligently, and

(c) Complete the entire work ready for use not later than ***180 working days***. The time stated for completion shall include final cleanup of the premises and completion of "punch list" items.

F.3 LIQUIDATED DAMAGES

F.3.1 52.211-12 LIQUIDATED DAMAGES - CONSTRUCTION (SEP 2000)

(a) If the Contractor fails to complete the work within the time specified in the contract, or any extension, the Contractor shall pay liquidated damages to the Government in the amount of***Rs.10,000*** for each day of delay until the work is completed or accepted.

(b) If the Government terminates the Contractor's right to proceed, liquidated damages will continue to accrue until the work is completed. These liquidated damages are in addition to excess costs of repurchase under the Default clause.

F.3.2. ASSESSMENT AND APPORTIONMENT OF LIQUIDATED DAMAGES

Liquidated damages will be assessed from the completion date indicated in the contract or extensions thereof to the date of substantial completion as actually achieved by the Contractor, as determined by the Contracting Officer.

F.4 CONTRACTOR'S SUBMISSION OF CONSTRUCTION SCHEDULES

(a) The time for submission of the schedules referenced in Section I, 52.236-15, "Schedules for Construction Contracts", paragraph (a), is hereby modified to reflect the due date for submission as "ten (10) days after receipt of an executed contract".

(b) These schedules shall include the time by which shop drawings, product data, samples and other submittals required by the contract will be submitted for approval.

(c) The Contractor shall revise such schedules (1) to account for the actual progress of the work, (2) to reflect approved adjustments in the performance schedule, and (3) as required by the Contracting Officer to achieve coordination with work by the Government and any separate contractors used by the Government. The Contractor shall submit a schedule which sequences work so as to minimize disruption at the job site.

(d) All schedules shall be in the English language and any system of dimensions (English or metric) shown shall be consistent with that used in the contract. No extension of time shall be allowed due to a delay by the Government in approving such deliverables if the Contractor has failed to act promptly and responsively in submitting its deliverables. The Contractor shall identify each deliverable as required by the contract.

F.5 ACCEPTANCE OF SCHEDULE

When the Government has accepted any time schedule, it shall be binding upon the Contractor. The completion date is fixed and may be extended only by a written contract modification signed by the Contracting Officer. Acceptance or approval of any schedule or revision thereof by the Government shall not (1) extend the completion date or obligate the Government to do so, (2) constitute acceptance or approval of any delay, or (3) excuse the Contractor from or relieve the Contractor of its obligation to maintain the progress of the work and achieve final completion by the established completion date.

F.6 NOTICE OF DELAY

If the Contractor receives a notice of any change in the work, or if any other conditions arise which are likely to cause or are actually causing delays which the Contractor believes may result in late completion of the project, the Contractor shall notify the Contracting Officer. The Contractor's notice shall state the effect, if any, of such change or other conditions upon the approved schedule, and shall state in what respects, if any, the relevant schedule or the completion date should be revised. The Contractor shall give this notice not more than ten (10) days after the first event-giving rise to the delay or prospective delay. Only the Contracting Officer may make revisions to the approved time schedule.

F.7 NOTICE TO PROCEED

(a) After receiving and accepting any bonds or evidence of insurance, the Contracting Officer will issue the Contractor a Notice to Proceed. The Contractor shall then prosecute the work commencing and completing performance not later than the time period established in the contract.

(b) It is possible that the Contracting Officer may elect to issue the Notice to Proceed before receipt and acceptance of any bonds. Issuance of a Notice to Proceed by the Government before receipt of the required bonds or policies shall not be a waiver of the requirement to furnish these documents.

F.8 WORKING HOURS

All work shall be performed during ***Monday-Friday from 08:00-16:30 hrs*** except for the holidays identified below. Other hours, if requested by the Contractor, may be approved by the Contracting Officer's Representative. The Contractor shall give 24 hours in advance to COR who will consider any deviation from the hours identified above. Changes in work hours will not be a cause for a price increase.

(a) The Department of State observes the following days as holidays:

New Year's Day
Martin Luther King's Birthday
Washington's Birthday
Memorial Day
Independence Day
Labor Day
Columbus Day
Veterans Day
Thanksgiving Day
Christmas Day

(b) Local holidays

Eid-eMiland-un-Nabi
Pakistan Day
Labor Day
Eid-ul-Fitr
Pakistan Independence day
Eid-ul-Azha
Iqbal day
9th & 10th Moharram
Quaid-e-Azam Birthday

Any other day designated by Federal law, Executive Order or Presidential Proclamation.

When any such day falls on a Saturday, the preceding Friday is observed; when any such day falls on a Sunday, the following Monday is observed. Observance of such days by Government personnel

shall not be cause for additional period of performance or entitlement to compensation except as set forth in the contract. If the contractor's personnel work on a holiday, no form of holiday or other premium compensation will be reimbursed either as a direct or indirect cost, unless authorized pursuant to an overtime clause elsewhere in this contract.

F.9 EXCUSABLE DELAYS

The Contractor will be allowed time, not money, for excusable delays as defined in FAR 52.249-10, Default. Examples of such cases include:

(l) acts of God or of the public enemy,

(2) acts of the United States Government in either its sovereign or contractual capacity,

(3) acts of the government of the host country in its sovereign capacity,

(4) acts of another contractor in the performance of a contract with the Government,

(5) fires,

(6) floods,

(7) epidemics,

(8) quarantine restrictions,

(9) strikes,

(l0) freight embargoes,

(11) delays in delivery of Government furnished equipment and

(12) unusually severe weather.

In each instance, the failure to perform must be beyond the control and without the fault or negligence of the Contractor, and the failure to perform. Furthermore, the failure:

(1) must be one that the Contractor could not have reasonably anticipated and taken adequate measures to protect against,

(2) cannot be overcome by reasonable efforts to reschedule the work, and

(3) directly and materially affects the date of final completion of the project.

F.10 PRECONSTRUCTION CONFERENCE

A preconstruction conference will be held 10 days after contract award at ***American Consulate General, Mai Kolachi Road, Karachi*** to discuss the schedule, submittals, notice to proceed, mobilization and other important issues that affect construction progress. See FAR 52.236-26, Pre-Construction Conference in Section I.

F.11 DELIVERABLES

The following items shall be delivered under this contract:

Description	**Quantity**	**Delivery Date**	**Deliver To:**
H.1.2. Bonds/Insurance	1	10 days after award	CO
H.11.1. Safety Plan	1	10 days after award	COR
E.2. Quality Assurance Plan	1	10 days after award	COR
F.4. Construction Schedule	1	10 days after award	COR
H.14.1. Submittal Register	1	10 days after award	COR
F.10. Pre-Construction Conference	1	10 days after award	COR
H.13.2. Biographic Data on Personnel	1	10 days after award	COR
E.2. Inspection Reports	1	3 days after end of weekly period	COR
G.3.2 Payment Request	1	Last day of each month	COR

E.2.1. Monthly Progress Report	1	7th day of the following month	COR
F.4.(c). Updates to Construction	1	Last day of each month	COR
E.3.2. Request for Substantial Completion	1	5 days before inspection	COR
H.4.4. As-built Drawings and Warranties	1	After final completion but before final acceptance	COR
E.4.2. Request for Final Acceptance	1	5 days before inspection	COR
F.6 Notice of Delay	1	Within 10 days after event	CO
F.8 Additional Hours	1	No later than 24 hours in advance of need	COR
H.2.4 Evidence of Insurance	1	10 days after award	CO
H.17.2 Differing Site Condition	1	Within 10 days of occurrence	CO

SECTION G - CONTRACT ADMINISTRATION DATA

G.1 AUTHORITY OF CONTRACTING OFFICER

All work shall be performed under the general direction of the Contracting Officer, who alone shall have the power to bind the Government and to exercise the rights, responsibilities, authorities and functions vested by the contract.

G.2 MONITORING OF THE CONTRACTOR

G.2.1. 652.242-70 CONTRACTING OFFICER'S REPRESENTATIVE (COR) (AUG 1999)

(a) The Contracting Officer may designate in writing one or more Government employees, by position title, to take action for the Contracting Officer under this contract. Each designee shall be identified as a Contracting Officer’s Representative (COR). Such designation(s) shall specify the scope and limitations of the authority so delegated; provided, that the designee shall not change the terms or conditions of the contract, unless the COR is a warranted Contracting Officer and this authority is delegated in the designation.

(b) The COR for this contract is the ***Facility Manage, US Consulate Karachi***

G.2.2 DUTIES

The COR is responsible for inspection and acceptance of services. These duties include review of Contractor invoices, including the supporting documentation required by the contract. The COR may provide technical advice, substantive guidance, inspections, invoice approval, and other purposes as deemed necessary under the contract. The COR is designated as the authority to act for the Contracting Officer in matters concerning technical clarification, random inspection of Contractor performance to ensure compliance with contract specifications and acceptance of the Contractor's performance under this contract. The COR will coordinate all work with the Contractor during the term of this contract. The COR is not authorized to alter the contract's terms, or conditions, including the design to budget parameter. Such changes must be authorized by the Contracting Officer in a written modification to the contract. Reference to the project architect within documents incorporated into this contract shall be read to mean COR.

G.3 PAYMENT

G.3.1 GENERAL

Payments are subject to FAR 52.232-5, "Payments Under Fixed-Price Construction Contracts".

G.3.2 DETAIL OF PAYMENT REQUESTS

Each application for payment shall cover the value of labor and materials completed and in place, including a prorated portion of overhead and profit. The Government will make payments no more frequently than monthly, unless otherwise provided in this contract. Partial payment is also authorized. The Contractor shall address invoices to:

Fiscal Office
American Consulate General
Mai Kolachi Road, Karachi.

G.3.3 PAYMENTS TO SUBCONTRACTORS

The Contractor shall make timely payment from the proceeds of the progress or final payment for which request is being made to subcontractors and suppliers following the Contractor's contractual arrangements with them.

G.3.4 EVALUATION BY THE CONTRACTING OFFICER

Following receipt of the Contractor's request for payment, and on the basis of an inspection of the work, the Contracting Officer shall make a determination as to the amount that is then due. If the Contracting Officer does not approve payment of the full amount applied for, less the retainage addressed in FAR 52.232-5, the Contracting Officer shall advise the Contractor of the reasons.

G.3.5 ADDITIONAL WITHHOLDING

The Government may withhold from payments due the Contractor any amounts as may be considered necessary to cover --

(a) Wages or other amounts due the Contractor's employees on this project;

(b) Wages or other amounts due employees of subcontractors on this project;

(c) Amounts due suppliers of materials or equipment for this project; and

(d) Any other amounts for which the Contractor may be held liable under this contract, including but not limited to the actual or prospective costs of correction of defective work and prospective liquidated damage when the Contractor has failed to make adequate progress.

This withholding is independent of monies retained by the Government under FAR 52.232-5, or otherwise as permitted to be retained under this contract.

G.3.6. PAYMENT

Under the authority of 52.232-27(a) the 14 day period identified in FAR 52.232-27(a)(1)(i)(A) is hereby changed to 30 days.

SECTION H - SPECIAL CONTRACT REQUIREMENTS

H.1 BOND/IRREVOCABLE LETTERS OF CREDIT REQUIREMENTS

H.1.1 BONDS/IRREVOCABLE LETTERS OF CREDIT REQUIRED

The Contractor shall furnish (1) a performance and guaranty bond and a payment bond on forms provided by and from sureties acceptable to the Government, each in the amount of 20% of the contract price, or (2) comparable alternate performance security (irrevocable letter of credit) approved by the Government such as letter of credit/guaranty shown in Section J.

H.1.2 TIME FOR SUBMISSION

The Contractor shall provide the bonds or alternate security as required by the paragraph H.1.1 above within ten (10) days after contract award. Failure to submit (1) the required bonds or other security acceptable to the Government in a timely manner; (2) bonds from an acceptable surety; or (3) bonds in the required amount, may result in rescinding or termination of the contract by the Government. If the contract is terminated, the contractor will be liable for those costs as described in FAR 52.249-10, "Default (Fixed-Price Construction).

H.1.3 COVERAGE

The bonds or alternate performance security shall guarantee the Contractor's execution and completion of the work within the contract time and the correction of any defects after completion as required by this contract, the payment of all wages and other amounts payable by the Contractor under its subcontracts or for labor and materials, and the satisfaction or removal of any liens or encumbrances placed on the work.

H.1.4 DURATION OF COVERAGE

The required performance and payment securities shall remain in effect in the full amount required until final acceptance of the project by the Government. Upon final acceptance, the penal sum of

the performance security only shall be reduced to 10% of the contract price. The performance security shall remain in effect for one year after the date of final completion and acceptance, and the Contractor shall pay any premium required for the entire period of coverage. The requirement for payment security terminates at final acceptance.

H.1.5 FAR 52.228-2 - ADDITIONAL BOND SECURITY (OCT 1997)

The Contractor shall promptly furnish additional security required to protect the Government and persons supplying labor or materials under this contract if --

(a) Any surety upon any bond, or issuing financial institution for other security, furnished with this contract becomes unacceptable to the Government;

(b) Any surety fails to furnish reports on its financial condition as required by the Government; or

(c) The contract price is increased so that the penal sum of any bond becomes inadequate in the opinion of the Contracting Officer; or

(d) An irrevocable letter of credit (ILC) used as security will expire before the end of the period of required security. If the contractor does not furnish an acceptable extension or replacement ILC, or other acceptable substitute, at least 30 days before an ILC's scheduled expiration, the Contracting Officer has the right to immediately draw on the ILC.

H.2 INSURANCE

H.2.1 AMOUNT OF INSURANCE

The Contractor is required by FAR 52.228-5 to provide whatever insurance is legally necessary. The Contractor, shall, at its own expense, provide and maintain during the entire performance period the following insurance amounts:

General Liability (includes premises/operations, collapse hazard, products, completed operations, contractual, independent contractors, broad form property damage, personal injury)

1. Bodily Injury on or off the site stated in US Dollars:

Per Occurrence ***$1000***

Cumulative ***$10000***

2. Property Damage on or off the site in US Dollars:

Per Occurrence ***$5000***

Cumulative ***$25000***

The foregoing types and amounts of insurance are the minimums required. The Contractor shall obtain any other types of insurance required by local law or that are ordinarily or customarily obtained in the location of the work. The limit of such insurance shall be as provided by law or sufficient to meet normal and customary claims.

The Contractor agrees that the Government shall not be responsible for personal injuries or for damages to any property of the Contractor, its officers, agents, servants, and employees, or any other person, arising from and incident to the Contractor's performance of this contract. The Contractor shall hold harmless and indemnify the Government from any and all claims arising there from, except in the instance of gross negligence on the part of the Government.

The Contractor shall obtain adequate insurance for damage to, or theft of, materials and equipment in insurance coverage for loose transit to the site or in storage on or off the site.

H.2.2 GOVERNMENT AS ADDITIONAL INSURED

The general liability policy required of the Contractor shall name "the United States of America, acting by and through the Department of State", as an additional insured with respect to operations performed under this contract.

H.2.3 INSURANCE-RELATED DISPUTES

Failure to agree to any adjustment contemplated under this contract regarding insurance shall be a dispute within the meaning of the clause in Section I, 52.233-1, Alternate I, "Disputes". Nothing in this clause shall excuse the Contractor from proceeding with the work.

H.2.4 TIME FOR SUBMISSION OF EVIDENCE OF INSURANCE

The Contractor shall provide evidence of the insurance required under this contract within ten (10) days after contract award. Failure to timely submit this evidence, in a form acceptable to the Contracting Officer, may result in rescinding or termination of the contract by the Government.

H.3 DEFINITIONS

In addition to the definitions provided in Section I, FAR 52.202-1 and DOSAR 652.202-70, the following definitions shall apply when used in connection with this contract:

(a) Contract Drawings or Drawings, where indicated by the context, means those drawings specifically listed in the construction contract or as later incorporated into the contract by contract modification.

(b) Day means a calendar day unless otherwise specifically indicated.

(c) Host Country means the country in which the project is located.

(d) Material means all materials, fixtures and other articles incorporated in, or which are intended to remain with, the project.

(e) Notice to Proceed means a written notice to the Contractor from the Contracting Officer authorizing the Contractor to proceed with the work under the contract as of a date set forth in the Notice.

(f) Other Submittals includes progress schedules, shop drawings, testing and inspection reports, and other information required by the contract to be submitted by the Contractor for information or approval by the Government.

(g) Project Data includes standard drawings, diagrams, layouts, schematics, descriptive literature, illustrations, schedules, performance and test data, and similar materials furnished by the Contractor to explain in detail specific portions of the work required by the contract.

(h) Samples are physical examples which illustrate materials, equipment or workmanship and establish standards by which the work will be judged.

(i) Schedule of Defects means the list of items, prepared in connection with substantial completion of the work or early occupancy or utilization of a portion thereof, which the Contracting Officer has designated as remaining to be performed, completed or corrected before the work will be accepted by the Government.

(j) Separate Contractor means a contractor, other than the Contractor or any of its subcontractors, to whom the Government has awarded a contact for construction of a portion of the project.

(k) Work means any and all permanent construction which is intended to be incorporated into the finished project and required to be performed or otherwise provided by the Contractor under this contract, unless otherwise indicated by the context.

H.4 OWNERSHIP AND USE OF DOCUMENTS

H.4.1 OWNERSHIP AND USE OF DRAWINGS, SPECIFICATIONS AND MODELS

(a) OWNERSHIP. All specifications, drawings, and copies thereof, and models, are the property of the Government.

(b) USE AND RETURN. The contractor shall not use or allow others to use the documents described in (a) above on other work. The Contractor shall return or account for the signed contractor set and additional copies provided to or made by the Contractor upon final completion of the work.

H.4.2 SUPPLEMENTAL DOCUMENTS

The Contracting Officer shall furnish from time to time such detailed drawings and other information as is considered necessary, in the opinion of the Contracting Officer, to interpret, clarify, supplement, or correct inconsistencies, errors or omissions in the Contract documents, or to describe minor changes in the work not involving an increase in the contract price or extension of the contract time. The Contractor shall comply with the requirements of the supplemental documents, and unless the Contractor makes objection within 20 days, their issuance shall not provide for any claim for an increase in the Contract price or an extension of contract time.

H.4.3 RECORD DOCUMENTS

The Contractor shall maintain at the project site:

- a current marked set of Contract drawings and specifications indicating all interpretations and clarifications, contract modifications, change orders, or any other departure from the contract requirements approved by the Contracting Officer; and

- a complete set of record shop drawings, product data, samples and other submittals as approved by the Contracting Officer.

H.4.4 "AS-BUILT" DOCUMENTS

After final completion of the work, but before final acceptance, the Contractor shall provide:

- complete set of "as-built" drawings, based on the record set of drawings, marked to show the details of construction as actually accomplished; and

- record shop drawings and other submittals, in the number and form as required by the specifications.

H.5 GOVERNING LAW

The laws of the United States shall govern the contract and its interpretation.

H.6 LANGUAGE PROFICIENCY

The manager assigned by the contractor to superintend the work on-site, as required by Section I, 52.236-6, "Superintendence by the Contractor", shall be fluent in written and spoken English.

H.7 LAWS AND REGULATIONS

H.7.1 COMPLIANCE REQUIRED

The Contractor shall, without additional expense to the Government, be responsible for complying with all laws, codes, ordinances, and regulations applicable to the performance of the work, including those of the host country, and with the lawful orders of any governmental authority having jurisdiction. Host country authorities may not enter the construction site without the permission of the Contracting Officer. Unless otherwise directed by the Contracting Officer, the Contractor shall comply with the more stringent of the requirements of such laws, regulations and orders and of the contract. In the event of a conflict between the contract and such laws, regulations and orders, the Contractor shall promptly advise the Contracting Officer of the conflict and of the Contractor's proposed course of action for resolution by the Contracting Officer.

H.7.2 LABOR, HEALTH AND SAFETY LAWS AND CUSTOMS

The Contractor shall comply with all local labor laws, regulations, customs and practices pertaining to labor, safety, and similar matters, to the extent that such compliance is not inconsistent with the requirements of this contract.

H.7.3 SUBCONTRACTORS

The Contractor shall give written assurance to the Contracting Officer that all subcontractors and others performing work on or for the project have obtained all requisite licenses and permits.

H.7.4 EVIDENCE OF COMPLIANCE

The Contractor shall submit proper documentation and evidence satisfactory to the Contracting Officer demonstrating compliance with this clause when directed by the Contracting Officer.

H.8 RESPONSIBILITY OF CONTRACTOR

H.8.1 DAMAGE TO PERSONS OR PROPERTY

The Contractor shall be responsible for all damages to persons or property that occur as a result of the Contractor's fault or negligence, and shall take proper safety and health precautions to protect the work, the workers, the public, and the property of others.

H.8.2 RESPONSIBILITY FOR WORK PERFORMED

The Contractor shall be responsible for all materials delivered and work performed until final completion and acceptance of the entire work, except for any completed unit of work which may have been accepted in writing under the contract.

H.9 CONSTRUCTION OPERATIONS

H.9.1 OPERATIONS AND STORAGE AREAS

(a) CONFINEMENT TO AUTHORIZED AREAS. The Contractor shall confine all operations (including storage of materials) on Government premises to areas authorized or approved by the Contracting Officer.

(b) VEHICULAR ACCESS. The Contractor shall, and in accordance with any regulations prescribed by the Contracting Officer, use only established site entrances and roadways.

H.9.2 USE OF PREMISES

(a) Occupied Premises. If the premises are occupied, the Contractor, its subcontractors, and their employees shall comply with the regulations promulgated by the Government governing access to, operation of, and conduct while in or on the premises and shall perform the work required under this contract in such a manner as not to unreasonably interrupt or interfere with the conduct of Government business.

(b) Requests from occupants. The Contractor shall refer any request from occupants of existing buildings to change the sequence of work to the Contracting Officer for determination.

(c) Access limited. The Contractor, its subcontractors and their employees shall not have access to or be admitted into any building or portion of the site outside the areas designated in this contract except with the permission of the Contracting Officer.

H.10 TEMPORARY FACILITIES AND SERVICES

The Contractor may erect temporary buildings (such as, storage sheds, shops, offices) and utilities only with the approval of the Contracting Officer. The cost of these temporary buildings is included in the contract fixed price. The temporary buildings and utilities shall remain the property of the Contractor and shall be removed by the Contractor at its expense upon completion of the work. With the written consent of the Contracting Officer, the buildings and utilities may be abandoned and need not be removed.

H.11 SAFETY

H.11.1 DOSAR 652.236-70 ACCIDENT PREVENTION (APR 2004)

(a) *General*. The contractor shall provide and maintain work environments and procedures which will safeguard the public and Government personnel, property, materials, supplies, and equipment exposed to contractor operations and activities; avoid interruptions of Government operations and delays in project completion dates; and, control costs in the performance of this contract. For these purposes, the contractor shall:

(1) Provide appropriate safety barricades, signs and signal lights;

(2) Comply with the standards issued by any local government authority having jurisdiction over occupational health and safety issues; and,

(3) Ensure that any additional measures the contracting officer determines to be reasonably necessary for this purpose are taken.

(4) For overseas construction projects, the contracting officer shall specify in writing additional requirements regarding safety if the work involves:

(i) Scaffolding;

(ii) Work at heights above two (2) meters;

(iii) Trenching or other excavation greater than one (1) meter in depth;

(iv) Earth moving equipment;

(v) Temporary wiring, use of portable electric tools, or other recognized electrical hazards. Temporary wiring and portable electric tools require the use of a ground fault circuit interrupter (GFCI) in the affected circuits; other electrical hazards may also require the use of a GFCI;

(vi) Work in confined spaces (limited exits, potential for oxygen less that 19.5 percent or combustible atmosphere, potential for solid or liquid engulfment, or other hazards considered to be immediately dangerous to life or health such as water tanks, transformer vaults, sewers, cisterns, etc.);

(vii) Hazardous materials – a material with a physical or health hazard including but not limited to, flammable, explosive, corrosive, toxic, reactive or unstable, or any operations which creates any kind of contamination inside an occupied building such as dust from demolition activities, paints, solvents, etc.; or

(viii) Hazardous noise levels.

(b) *Records*. The contractor shall maintain an accurate record of exposure data on all accidents incident to work performed under this contract resulting in death, traumatic injury, occupational disease, or damage to or theft of property, materials, supplies, or equipment. The contractor shall report this data in the manner prescribed by the contracting officer.

(c) *Subcontracts*. The contractor shall be responsible for its subcontractors' compliance with this clause.

(d) *Written program.* Before commencing work, the contractor shall:

(1) Submit a written plan to the contracting officer for implementing this clause. The plan shall include specific management or technical procedures for effectively controlling hazards associated with the project; and,

(2) Meet with the contracting officer to discuss and develop a mutual understanding relative to administration of the overall safety program.

(e) *Notification*. The contracting officer shall notify the contractor of any non-compliance with these requirements and the corrective actions required. This notice, when delivered to the contractor or the contractor's representative on site, shall be deemed sufficient notice of the non-compliance and corrective action required. After receiving the notice, the contractor shall immediately take corrective action. If the contractor fails or refuses to promptly take corrective action, the contracting officer may issue an order suspending all or part of the work until satisfactory corrective action has been taken. The contractor shall not be entitled to any equitable adjustment of the contract price or extension of the performance schedule on any suspension of work order issued under this clause.

H.12 SUBCONTRACTORS AND SUPPLIERS

H.12.1 CLAIMS AND ENCUMBRANCES

The Contractor shall satisfy as due all lawful claims of any persons or entities employed by the Contractor, including subcontractors, material men and laborers, for all labor performed and materials furnished under this contract, including the applicable warranty or correction period, unless the Government shall be directly liable by contract. The Contractor shall not at any time permit any lien, attachment, or other encumbrance to be entered against or to remain on the building(s), or the premises, whether public or private, or any portion thereof, as a result of nonperformance of any part of this contract.

H.12.2 APPROVAL OF SUBCONTRACTORS

(a) REVIEW AND APPROVAL. The Government reserves the right to review proposed subcontractors for a period of five (5) days before providing notice of approval or rejection of any or all subcontractors.

(b) REJECTION OF SUBCONTRACTORS. The Government reserves the right to reject any or all subcontractors proposed if their participation in the project, as determined by the Contracting Officer, may cause damage to the national security interests of the United States. The Contractor agrees to promptly replace any subcontractor rejected by the Government under this clause.

H.13 CONSTRUCTION PERSONNEL

H.13.1 REMOVAL OF PERSONNEL

The Contractor shall maintain discipline at the site and at all times take all reasonable precautions to prevent any unlawful, riotous, or disorderly conduct by or among those at the site. The contractor shall ensure the preservation of peace and protection of persons and property in the neighborhood of the project. The Contracting Officer may require, in writing, that the Contractor remove from the work any employee that the Contracting Officer deems incompetent, careless, insubordinate or otherwise objectionable, or whose continued employment on the project is deemed by the Contracting Officer to be contrary to the Government's interests.

H.13.2 CONSTRUCTION PERSONNEL SECURITY

After award of the contract, the Contractor shall have ten days to submit to the Contracting Officer a list of workers and supervisors assigned to this project (Biographic Data on Personnel) for the Government to conduct all necessary security checks. It is anticipated that security checks will take ***30-60*** days to perform. For each individual the list shall include:

Full Name
Place and Date of Birth
Current Address
Identification number (CNIC**)**

Failure to provide any of the above information may be considered grounds for rejection and/or re-submittal of the application. Once the Government has completed the security screening and approved the applicants, the Government will provide a badge to the individual for access to the site. The Government may revoke this badge at any time due to the falsification of data, or misconduct on site.

H.14 MATERIALS AND EQUIPMENT

H.14.1 SELECTION AND APPROVAL OF MATERIALS

(a) STANDARD TO QUALITY. All materials and equipment incorporated into the work shall be new and for the purpose intended, unless otherwise specified. All workmanship shall be of good quality and performed in a skillful manner that will withstand inspection.

(b) SELECTION BY CONTRACTOR. Where the contract permits the Contractor to select products, materials or equipment to be incorporated in the work, or where specific approval is otherwise required by the contract, the Contractor shall furnish a Submittal Register to the Contracting Officer, for approval. The Submittal Register shall include the names of the manufacturer, model number, and source of procurement of each such product, material or equipment, together with other pertinent information concerning the nature, appearance, dimensions, performance, capacity, and rating. To ensure a timely review the Contractor shall provide a submittal register ten days after contract award showing when shop drawings, samples, or submittals shall be made. When directed to do so, the Contractor shall submit samples for approval at the Contractor's expense, with all shipping charges prepaid. Installation or use of any

products, materials or equipment without the required approval shall be at the risk of subsequent rejection.

H.14.2 CUSTODY OF MATERIALS

The Contractor shall be responsible for the custody of all materials received for incorporation into the project, including Government furnished materials, upon delivery to the Contractor or to any person for whom it is responsible, including subcontractors. The Contractor shall deliver all such items to the site as soon as practicable. If required by the Contracting Officer, the Contractor shall clearly mark in a manner directed by the Contracting Officer all items of which the Contractor has custody but which have not been delivered or secured at the site, clearly indicating the use of such items for the U.S. Government project.

H.14.3 BASIS OF CONTRACT PRICE

The contract price is based on the use of the materials, products and equipment specified in the contract, except for substitutions or "Or-Equal" items proposed by the Contractor which have been specifically approved by the Government at the time of execution of the contract. Any substitution approved by the Government after execution of the contract shall be subject to an appropriate adjustment of the contract price.

H.14.4 SUBSTITUTIONS

(a) PRIOR APPROVAL REQUIRED. The Contractor must receive approval in writing from the Contracting Officer before substitutions (1) proposed by the Contractor but not yet approved at the time of execution of the contract, or (2) proposed by the Contractor after execution of the contract may be used in the project. Sufficient information to permit evaluation by the Government must accompany any substitution request including but not limited to the reasons for the proposed substitution and data concerning the design, appearance, performance, composition, and relative cost of the proposed substitute. The Contractor shall make requests for substitutions in a timely manner to permit adequate evaluation by the Government. If, in the Contracting Officer's opinion, the use of such substitute items is not in the best interests of the Government, the Contractor must obtain the items originally specified with no adjustment in the contract price or completion date.

(b) APPROVAL THROUGH SHOP DRAWINGS. The Contractor may propose substitutions of materials in the submittal of shop drawings, provided such substitution is specifically requested in writing in the transmittal of the shop drawings to the Contracting Officer. Such substitution requests must be made in a timely manner and supported by the required information.

(c) FINAL APPROVAL ON DELIVERY. Acceptance or approval of proposed substitutions under the contract are conditioned upon approval of items delivered at the site or approval by sample. Approval by sample shall not limit the Government's right to reject material after delivery to the site if the material does not conform to the approved sample in all material respects.

H.14.5 "OR-EQUAL CLAUSE"

References in the Specifications/Statement of Work to materials, products or equipment by trade name, make, or catalog number, or to specific processes, shall be regarded as establishing a standard of quality and shall not be construed as limiting competition. The Contractor may propose for approval or rejection by the Contracting Officer the substitution of any material, product, equipment or process that the Contractor believes to be equal to or better than that named in the Specifications/Statement of Work, unless otherwise specifically provided in this contract.

H.14.6 USE AND TESTING OF SAMPLES

(“Samples” include materials and equipment.)

(a) USE. The Contractor shall send approved samples not destroyed in testing to the Contracting Officer. Those which are in good condition will be marked for identification and may be used in the work. Materials and equipment incorporated in the work shall match the approved samples within any specified tolerances. Other samples not destroyed in testing or not approved will be returned to the Contractor at its expense if so requested.

(b) FAILURE OF SAMPLES. If a sample fails to pass the specified tests described in this contract, any further samples of the same brand or make of that material or equipment may not be considered for use in performance under this contract.

(c) TAKING AND TESTING OF SAMPLES. Samples delivered on the site or in place may be taken by the Contracting Officer for additional testing by the Government outside of those required by the Contract documents. Samples failing to meet contract requirements will automatically void previous approvals of the items tested. The Contractor shall replace such materials or equipment found not to have met contract requirements, unless the Contracting Officer determines it to be in the Government's interest to accept the non-conforming materials or equipment with an appropriate adjustment of the Contract price as determined by the Contracting Officer.

(d) COST OF ADDITIONAL TESTING BY THE GOVERNMENT. When additional tests of samples are performed, only one test of each sample proposed for use will be made at the expense of the Government. Samples which do not meet contract requirements will be rejected. Further testing of additional samples, if required, will be made at the expense of the Contractor.

H.15 IMPORTED MATERIALS, EQUIPMENT, AND PERSONNEL

H.15.1 SHIPMENT AND CUSTOMS CLEARANCE

(a) Costs to be borne by Contractor. The Contractor is responsible for paying all charges incurred in obtaining materials that must be imported for the project and in transporting the materials from their place or origin to the construction site. Moving costs shall include, but not necessarily be limited to, packing, handling, cartage, overland freight, ocean freight, transshipment, port, unloading, customs clearance and duties (other than customs duties specified below), unpacking, storage, and all other charges including administrative costs in connection with obtaining and transporting the materials from their source to the project site.

(b) Duty-free clearance. The Contractor shall not be responsible for customs duties for which the Government has been able to obtain a customs waiver. The Contractor shall follow the instructions of the Contracting Officer as to the manner of labeling the shipping containers or otherwise processing shipments of imported materials in order to obtain, or continue to receive, duty free clearance through customs. The Contractor shall be responsible for the payment of customs duties, if any, which

(1) are imposed on items which are not labeled and processed in accordance with the Contracting Officer's instructions,

(2) are imposed on the Contractor's tools, construction equipment and machinery imported for use on the project, or

(3) are otherwise ineligible for duty-free entry. The Contractor is responsible for customs duties where the Contractor has failed to give adequate and timely notice to the Contracting Officer of importation on containers or materials which may be eligible for a customs waiver. The Contracting Officer will provide instructions concerning time periods for notification of importation by the Contractor.

(c) Customs Clearance. The Government will be responsible for obtaining customs clearances, and for obtaining exemption certificates or paying customs duties not waived, for imported products, materials and equipment which are labeled and processed in accordance with the Contracting Officer's instructions. The Government shall not be responsible for obtaining customs clearance for the Contractor's tools, construction equipment or machinery, nor for obtaining visas, entry or work permits for the Contractor's personnel.

H.15.2 SURPLUS MATERIALS

Unless otherwise specified, any surplus materials, fixtures, articles or equipment remaining at the completion of the project shall become the property of the Contractor, except those items furnished by the Government, whose cost is not included in the contract price.

H.16 SPECIAL WARRANTIES

H.16.1 SPECIAL WARRANTY OBLIGATIONS

Any special warranties that may be required under the contract shall be subject to the stipulations set forth in 52.246-21, "Warranty of Construction", as long as they do not conflict with the special warranty.

H.16.2 WARRANTY INFORMATION

The Contractor shall obtain and furnish to the Government all information required in order to make any subcontractor's, manufacturers, or supplier's guarantee or warranty legally binding and effective. The Contractor shall submit both the information and the guarantee or warranty to the Government in sufficient time to permit the Government to meet any time limit

specified in the guarantee or warranty, but not later than completion and acceptance of all work under this contract.

H.17 EQUITABLE ADJUSTMENTS

H.17.1 BASIS FOR EQUITABLE ADJUSTMENTS

Any circumstance for which the contract provides an equitable adjustment that causes a change within the meaning of paragraph (a) of the "Changes" clause shall be treated as a change under that clause. The Contractor shall give the Contracting Officer written notice (within 20 days) stating:

(a) the date, circumstances, and applicable contract clause authorizing an equitable adjustment and

(b) that the Contractor regards the event as a changed condition for which an equitable adjustment is allowed under the contract.

H.17.2 DIFFERING SITE CONDITION NOTICE

The Contractor shall provide written notice of a differing site condition within 10 days of occurrence following FAR 52.236-2, Differing Site Conditions.

H.17.3 DOCUMENTATION OF PROPOSALS FOR EQUITABLE ADJUSTMENTS

(a) ITEMIZATION OF PROPOSALS AND REQUESTS. The Contractor shall submit any request for equitable adjustment in the contract price, including any change proposal submitted in accordance with the "Changes" clause, in the form of a lump sum proposal supported with an itemized breakdown of all increases and decreases in the contract price in the detail required by the Contracting Officer, The request shall include all costs and delays related to or arising out of the change or event giving rise to the proposed adjustment, including any delay damages and additional overhead costs.

(b) PROPOSED TIME ADJUSTMENTS. The Contractor shall submit a proposed time extension (if applicable) with any request for an equitable adjustment or change proposal.

The request shall include sufficient information to demonstrate whether and to what extent the change will delay the completion of the contract.

(c) RELEASE BY CONTRACTOR. The price and time adjustment made in any contract modification issued as a result of a change proposal or request for an equitable adjustment shall be considered to account for all items affected by the change or other circumstances giving rise to an equitable adjustment. Upon issuance of such contract modification, the Government shall be released from any and all liability under this contract for further equitable adjustments attributable to the facts and circumstances giving rise to the change proposal or request for equitable adjustment.

H.18 NONCOMPLIANCE WITH CONTRACT REQUIREMENTS

If the Contractor, after receiving written notice from the Contracting Officer of noncompliance with any requirement of this contract, fails to initiate promptly appropriate action(s) to bring performance/work into compliance with a contract requirement within a reasonable period of time, the Contracting Officer shall have the right to order the Contractor to suspend any or all work under the contract. This order shall be in force until the Contractor has complied or has initiated such action as may be appropriate to comply within a reasonable period of time. The Contractor will not be entitled to any extension of contract time or payment for any costs incurred as a result of being ordered to suspend work for such a cause.

H.19 ZONING APPROVALS AND BUILDING PERMITS

The Government is responsible for:

- obtaining proper zoning or other land use control approval for the project,
- obtaining the approval of the Contract Drawings and Specifications,
- paying fees due, and
- obtaining and paying for the initial building permits.

SECTION I - CONTRACT CLAUSES

I.1 FAR 52.252-2 CLAUSES INCORPORATED BY REFERENCE (FEB 1998)

This contract incorporates one or more clauses by reference, with the same force and effect as if they were given in full text. Upon request, the Contracting Officer will make their full text available. Also, the full text of a clause may be accessed electronically at:

http://acquisition.gov/far/index.html or, http://farsite.hill.af.mil/search.htm

These addresses are subject to change. If the Federal Acquisition Regulation (FAR) is not available at the locations indicated above, use the Dept. of State Acquisition Website at http://www.statebuy.state.gov/ to see the links to the FAR. You may also use an Internet "search engine" (such as, Yahoo, Excite, Alta Vista, etc.) to obtain the latest location of the most current FAR.

FEDERAL ACQUISITION REGULATION (48 CFR Ch. 1)

52.202-1	DEFINITIONS	JAN 2012
52.203-3	GRATUITIES	APR 1984
52.203-5	COVENANT AGAINST CONTINGENT FEES	APR 1984
52.203-6	RESTRICTIONS ON SUBCONTRACTOR SALES TO THE GOVERNMENT	SEP 2006
52.203-7	ANTI-KICKBACK PROCEDURES	OCT 2010
52.203-8	CANCELLATION, RECISSION AND RECOVERY OF FUNDS FOR ILLEGAL OR IMPROPER ACTIVITY	JAN 1997
52.203-10	PRICE OR FEE ADJUSTMENT FOR ILLEGAL OR IMPROPER ACTIVITY	JAN 1997
52.203-12	LIMITATION ON PAYMENTS TO INFLUENCE CERTAIN FEDERAL TRANSACTIONS	OCT 2010
52.203-13	CONTRACTOR CODE OF BUSINESS ETHICS	APR 2010

52.204-4	PRINTING/COPYING DOUBLE-SIDED ON RECYCLED PAPER	MAY 2011
52.204-9	PERSONAL VERIFICATION OF CONTRACTOR PERSONNEL	JAN 2011
52.204-10	REPORTING EXECUTIVE COMPENSATION AND FIRST-TIER SUBCONTRACT AWARDS	AUG 2012
52.209-6	PROTECTING THE GOVERNMENT'S INTEREST WHEN SUBCONTRACTING WITH CONTRACTORS DEBARRED, SUSPENDED, OR PROPOSED FOR DEBARMENT	DEC 2010
52.215-2	AUDIT AND RECORDS – NEGOTIATION	OCT 2010
52.215-8	ORDER OF PRECEDENCE – UNIFORM CONTRACT FORMAT	OCT 1997
52.215-21	REQUIREMENTS FOR COST OR PRICING DATA OR PRICING DATA OR INFORMATION OTHER THAN COST OR PRICING DATA – MODIFICATIONS	OCT 2010
52.216-7	ALLOWABLE COST AND PAYMENT ALTERNATE I	JUN 2011 JUN 2011
52.222-1	NOTICE TO THE GOVERNMENT OF LABOR DISPUTES	FEB 1997
52.222-19	CHILD LABOR – COOPERATION WITH AUTHORITIES AND REMEDIES	MAR 2012
52.222-50	COMBATING TRAFFICKING IN PERSONS	FEB 2009
52.223-18	CONTRACTOR POLICY TO BAN TEXT MESSAGING WHILE DRIVING	AUG 2011
52.225-13	RESTRICTIONS ON CERTAIN FOREIGN PURCHASES	JUN 2008
52.225-14	INCONSISTENCY BETWEEN ENGLISH VERSION AND TRANSLATION OF CONTRACT	FEB 2000
52.225-25	PROHIBITION ON CONTRACTING WITH ENTITIES ENGAGING IN CERTAIN ACTIVITIES OR TRANSACTIONS RELATING TO IRAN –	DEC 2012

	REPRESENTATION AND CERTIFICATIONS	
52.228-2	ADDITIONAL BOND SECURITY	OCT 1997
52.228-4	WORKERS' COMPENSATION AND WAR-HAZARD INSURANCE OVERSEAS	APR 1984
52.228-5	INSURANCE – WORK ON A GOVERNMENT INSTALLATION	JAN 1997
52.228-11	PLEDGES OF ASSETS	JAN 2012
52.228-13	ALTERNATIVE PAYMENT PROTECTION	JUL 2000
52.228-14	IRREVOCABLE LETTER OF CREDIT	DEC 1999
52.229-6	TAXES – FOREIGN FIXED-PRICE CONTRACTS	JUN 2003
52.232-5	PAYMENTS UNDER FIXED-PRICE CONSTRUCTION CONTRACTS	SEP 2002
52.232-17	INTEREST	OCT 2010
52.232-18	AVAILABILITY OF FUNDS	APR 1984
52.232-24	PROHIBITION OF ASSIGNMENT OF CLAIMS	JAN 1986
52.232-32	PERFORMANCE –BASED PAYMENTS	APR 2012
52.232-27	PROMPT PAYMENT FOR CONSTRUCTION CONTRACTS	OCT 2008
52.232-34	PAYMENT BY ELECTRONIC FUNDS TRANSFER – OTHER THAN CENTRAL CONTRACTOR REGISTRATION	MAY 1999
52.233-1	DISPUTES ALTERNATE I	JUL 2002 DEC 1991
52.233-3	PROTEST AFTER AWARD	AUG 1996
52.233-4	APPLICABLE LAW FOR BREACH OF CONTRACT CLAIM	OCT 2004
52.236-2	DIFFERING SITE CONDITIONS	APR 1984
52.236-3	SITE INVESTIGATION AND CONDITIONS AFFECTING THE WORK	APR 1984

52.236-5	MATERIAL AND WORKMANSHIP	APR 1984
52.236-6	SUPERINTENDENCE BY THE CONTRACTOR	APR 1984
52.236-7	PERMITS AND RESPONSIBILITIES	NOV 1991
52.236-8	OTHER CONTRACTS	APR 1984
52.236-9	PROTECTION OF EXISTING VEGETATION, STRUCTURES, EQUIPMENT, UTILITIES, AND IMPROVEMENTS	APR 1984
52.236-10	OPERATIONS AND STORAGE AREAS	APR 1984
52.236-11	USE AND POSSESSION PRIOR TO COMPLETION	APR 1984
52.236-12	CLEANING UP	APR 1984
52.236-14	AVAILABILITY AND USE OF UTILITY SERVICES	APR 1984
52.236-15	SCHEDULES FOR CONSTRUCTION CONTRACTS	APR 1984
52.236-21	SPECIFICATIONS AND DRAWINGS FOR CONSTRUCTION	FEB 1997
52.236-26	PRECONSTRUCTION CONFERENCE	FEB 1995
52.242-3	PENALTIES FOR UNALLOWABLE COSTS	MAY 2001
52.242-13	BANKRUPTCY	JUL 1995
52.243-4	CHANGES	JUNE 2007
52.245-1	GOVERNMENT PROPERTY	APR 2012
52.243-5	CHANGES AND CHANGED CONDITIONS	APR 1984
52.245-9	USE & CHARGES	APR 2012
52.246-21	WARRANTY OF CONSTRUCTION	MAR 1994
52.248-3	VALUE ENGINEERING – CONSTRUCTION	OCT 2010
52.249-2	TERMINATION FOR CONVENIENCE OF THE GOVERNMENT (FIXED-PRICE) ALTERNATE I	APRIL 2012 SEPT 1996
52.249-14	EXCUSABLE DELAY	APRIL 1984
52.249-10	DEFAULT (FIXED-PRICE CONSTRUCTION)	APR 1984

52.247-63	PREFERENCE FOR U.S.-FLAG CARRIERS	JUN 2003
52.247-64	PREFERENCE FOR PRIVATELY OWNED U.S.-FLAG COMMERCIAL VESSELS	FEB 2006

THE FOLLOWING CLAUSES ARE SET FORTH IN FULL TEXT:

52.204-99 SYSTEM FOR AWARD MANAGEMENT REGISTRATION (AUGUST 2012) (DEVIATION)

(a) Definitions. As used in this clause-
"Central Contractor Registration (CCR) database" means the retired primary Government repository for Contractor information required for the conduct of business with the Government.
"Commercial and Government Entity (CAGE) code" means-
(1) A code assigned by the Defense Logistics Agency (DLA) Logistics Information Service to identify a commercial or Government entity; or
(2) A code assigned by a member of the North Atlantic Treaty Organization that DLA records and maintains in the CAGE master file. This type of code is known as an "NCAGE code."
"Data Universal Numbering System (DUNS) number" means the 9-digit number assigned by Dun and Bradstreet, Inc. (D&B) to identify unique business entities.
"Data Universal Numbering System+4 (DUNS+4) number" means the DUNS number assigned by D&B plus a 4-character suffix that may be assigned by a business concern. (D&B has no affiliation with this 4-character suffix.) This 4-character suffix may be assigned at the discretion of the business concern to establish additional **SAM** records for identifying alternative Electronic Funds Transfer (EFT) accounts (see the FAR at Subpart 32.11) for the same concern.
"Registered in the **SAM** database" means that-
(1) The Contractor has entered all mandatory information, including the DUNS number or the DUNS+4 number, into the SAM database;
(2) The Contractor's CAGE code is in the **SAM** database; and
(3) The Government has validated all mandatory data fields, to include validation of the Taxpayer Identification Number (TIN) with the Internal Revenue Service (IRS), and has marked the record "Active". The Contractor will be required to provide consent for TIN Attachment, Page 1 of 4 validation to the Government as a part of the **SAM** registration process.
"System for Award Management (SAM)" means the primary Government repository for prospective federal awardee information and the centralized Government system for certain contracting, grants, and other assistance related processes. It includes-
(1) Data collected from prospective federal awardees required for the conduct of business with the Government;
(2) Prospective contractor submitted annual representations and certifications in accordance with FAR Subpart 4.12; and
(3) The list of all parties suspended, proposed for debarment, debarred, declared ineligible, or excluded or disqualified under the nonprocurement common rule by agencies, Government corporations , or by the Government Accountability Office.

(b) (1) The Contractor shall be registered in the **SAM** database prior to submitting an invoice and through final payment of any contract, basic agreement, basic ordering agreement, or blanket purchasing agreement resulting from this solicitation.
(2) The **SAM** registration shall be for the same name and address identified on the contract, with its associated CAGE code and DUNS or DUNS+4.
(3) If indicated by the Government during performance, registration in an alternate system may be required in lieu of SAM.

(c) If the Contractor does not have a DUNS number, it should contact Dun and Bradstreet directly to obtain one.
(1) A contractor may obtain a DUNS number-
(i) Via the internet at http://fedgov.dnb.com/webform or if the contractor does not have internet access, it may call Dun and Bradstreet at 1-866-705-5711 if located within the United States; or
(ii) If located outside the United States, by contacting the local Dun and Bradstreet office. The contractor should indicate that it is a contractor for a U.S. Government contract when contacting the local Dun and Bradstreet office.
(2) The Contractor should be prepared to provide the following information:

(i) Company legal business name.
(ii) Trade style, doing business, or other name by which your entity is commonly recognized.
(iii) Company physical street address, city, state and Zip Code.
(iv) Company mailing address, city, state and Zip Code (if separate from physical).
(v) Company telephone number.
(vi) Date the company was started.
(vii) Number of employees at your location.
(viii) Chief executive officer/key manager.
(ix) Line of business (industry).
(x) Company Headquarters name and address (reporting relationship within your entity).

(d) Reserved.

(e) Processing time for registration in SAM, which normally takes five business days, should be taken into consideration when registering. Contractors who are not already registered should consider applying for registration at least two weeks prior to invoicing.

(f) The Contractor is responsible for the accuracy and completeness of the data within the **SAM** database, and for any liability resulting from the Government's reliance on inaccurate or incomplete data. To remain registered in the **SAM** database after the initial registration, the Contractor is required to review and update on an annual basis from the date of initial registration or subsequent updates its information in the **SAM** database to ensure it is current, accurate and complete. Updating information in the **SAM** does not alter the terms and conditions of this contract and is not a substitute for a properly executed contractual document.

(g) (1)(i) If a Contractor has legally changed its business name, "doing business as" name, or division name (whichever is shown on the contract), or has transferred the assets used in performing the contract, but has not completed the necessary requirements regarding novation and change-of-name agreements in Subpart 42.12, the Contractor shall provide the responsible Contracting Officer sufficient documentation to support the legally changed name with a minimum of one business day's written notification of its intention to-
(A) Change the name in the **SAM** database;
(B) Comply with the requirements of subpart 42.12 of the FAR; and
(C) Agree in writing to the timeline and procedures specified by the responsible Contracting Officer.
(ii) If the Contractor fails to comply with the requirements of paragraph (g) (1) (i) of this clause, or fails to perform the agreement at paragraph (g) (1) (i) (C) of this clause, and, in the absence of a properly executed novation or change-of-name agreement, the **SAM** information that shows the Contractor to be other than the Contractor indicated in the contract will be considered to be incorrect information within the meaning of the "Suspension of Payment" paragraph of the electronic funds transfer (EFT) clause of this contract.
(2) The Contractor shall not change the name or address for EFT payments or manual payments, as appropriate, in the **SAM** record to reflect an assignee for the purpose of assignment of claims (see FAR Subpart 32.8, Assignment of Claims). Assignees shall be separately registered in the **SAM** database. Information provided to the Contractor's **SAM** record that indicates payments, including those made by EFT, to an ultimate recipient other than that Contractor will be considered to be incorrect information within the meaning of the "Suspension of payment" paragraph of the EFT clause of this contract.

(h) Contractors may obtain information on registration and annual confirmation requirements via the **SAM** accessed through https://www.acquisition.gov or by calling 866-606-8220, or 334-206-7828 for international calls.

(End of Clause)

52.232-99, Providing Accelerated Payment to Small Business Subcontractors (DEVIATION) (AUG 2012)

This clause implements the temporary policy provided by OMB Policy Memorandum

M- 12-16, Providing Prompt Payment to Small Business Subcontractors, dated July 11, 2012.

(a) Upon receipt of accelerated payments from the Government, the contractor is required to make accelerated payments to small business subcontractors to the maximum extent practicable after receipt of a proper invoice and all proper documentation from the small business subcontractor.

(b) Include the substance of this clause, including this paragraph (b), in all subcontracts with small business concerns.

(c) The acceleration of payments under this clause does not provide any new rights under the Prompt Payment Act.

I.1 652.204-70 DEPARTMENT OF STATE PERSONAL IDENTIFICATION CARD ISSUANCE PROCEDURES (MAY 2011)

(a) The Contractor shall comply with the Department of State (DOS) Personal Identification Card Issuance Procedures for all employees performing under this contract who require frequent and continuing access to DOS facilities, or information systems. The Contractor shall insert this clause in all subcontracts when the subcontractor's employees will require frequent and continuing access to DOS facilities, or information systems.

(b) The DOS Personal Identification Card Issuance Procedures may be accessed at *http://www.state.gov/m/ds/rls/rpt/c21664.htm* .

(End of clause)

I.2 652.243-70 NOTICES (AUG 1999)

Any notice or request relating to this contract given by either party to the other shall be in writing. Said notice or request shall be mailed or delivered by hand to the other party at the address provided in the schedule of the contract. The contracting officer must make all modifications to the contract in writing.

I.3 652.242-73 AUTHORIZATION AND PERFORMANCE (AUG 1999)

(a) The contractor warrants the following:

(1) That is has obtained authorization to operate and do business in the country or countries in which this contract will be performed;

(2) That is has obtained all necessary licenses and permits required to perform this contract; and,

(3) That it shall comply fully with all laws, decrees, labor standards, and regulations of said country or countries during the performance of this contract.

(b) If the party actually performing the work will be a subcontractor or joint venture partner, then such subcontractor or joint venture partner agrees to the requirements of paragraph (a) of this clause.

I.4 RESERVED

I.5 THE FOLLOWING CLAUSE IS APPLICABLE IF CHECKED

[ ] 652.229-70 EXCISE TAX EXEMPTION STATEMENT FOR CONTRACTORS WITHIN THE UNITED STATES (JUL 1988)

This is to certify that the item(s) covered by this contract is/are for export solely for the use of the U.S. Foreign Service Post identified in the contract schedule.

The Contractor shall use a photocopy of this contract as evidence of intent to export. Final proof of exportation may be obtained from the agent handling the shipment. Such proof shall be accepted in lieu of payment of excise tax.

I.6. 52.228-15 Performance and Payment Bonds—Construction (OCT 2010)

(a) *Definitions*. As used in this clause—

"Original contract price" means the award price of the contract; or, for requirements contracts, the price payable for the estimated total quantity; or, for indefinite-quantity contracts, the price payable for the specified minimum quantity. Original contract price does not include the price of any options, except those options exercised at the time of contract award.

(b) *Amount of required bonds*. Unless the resulting contract price is $150,000 or less, the successful offeror shall furnish performance and payment bonds to the Contracting Officer as follows:

(1) *Performance bonds (Standard Form 25)*. The penal amount of performance bonds at the time of contract award shall be 100 percent of the original contract price.

(2) *Payment Bonds (Standard Form 25-A)*. The penal amount of payment bonds at the time of contract award shall be 100 percent of the original contract price.

(3) Additional bond protection.

(i) The Government may require additional performance and payment bond protection if the contract price is increased. The increase in protection generally will equal 100 percent of the increase in contract price.

(ii) The Government may secure the additional protection by directing the Contractor to increase the penal amount of the existing bond or to obtain an additional bond.

(c) *Furnishing executed bonds*. The Contractor shall furnish all executed bonds, including any necessary reinsurance agreements, to the Contracting Officer, within the time period specified in the Bid Guarantee provision of the solicitation, or otherwise specified by the Contracting Officer, but in any event, before starting work.

(d) *Surety or other security for bonds*. The bonds shall be in the form of firm commitment, supported by corporate sureties whose names appear on the list contained in Treasury Department Circular 570, individual sureties, or by other acceptable security such as postal money order, certified check, cashier's check, irrevocable letter of credit, or bonds or notes of the United States. Treasury Circular 570 is published in the Federal Register or Department of Treasury, Financial Management Service, Surety Bond Branch, 3700 East West Highway, Room 6F01, Hyattsville, MD 20782. Or via the internet at

http:://www.fms.treas.gov/c570/.

(e) *Notice of subcontractor waiver of protection (40 U.S.C. 3133(c))*. Any waiver of the right to sue on the payment bond is void unless it is in writing, signed by the person whose right is waived, and executed after such person has first furnished labor or material for use in the performance of the contract."

I.7 652.225-71 SECTION 8(A) OF THE EXPORT ADMINISTRATION ACTS OF 1979, AS AMENDED (AUG 1999)

(a) Section 8(a) of the U.S. Export Administration Act of 1979, as amended (50 U.S.C. 2407(a)), prohibits compliance by U.S. persons with any boycott fostered by a foreign country against a country which is friendly to the United States and which is not itself the object of any form of boycott pursuant to United States law or regulation. The Boycott of Israel by Arab League countries is such a boycott, and therefore, the following actions, if taken with intent to comply with, further, or support the

Arab League Boycott of Israel, are prohibited activities under the Export Administration Act:

(1) Refusing, or requiring any U.S. person to refuse to do business with or in Israel, with any Israeli business concern, or with any national or resident of Israel, or with any other person, pursuant to an agreement of, or a request from or on behalf of a boycotting country;

(2) Refusing, or requiring any U.S. person to refuse to employ or otherwise discriminating against any person on the basis of race, religion, sex, or national origin of that person or of any owner, officer, director, or employee of such person;

(3) Furnishing information with respect to the race, religion, or national origin of any U.S. person or of any owner, officer, director, or employee of such U.S. person;

(4) Furnishing information about whether any person has, has had, or proposes to have any business relationship (including a relationship by way of sale, purchase, legal or commercial representation, shipping or other transport, insurance, investment, or supply) with or in the State of Israel, with any business concern organized under the laws of the State of Israel, with any Israeli national or resident, or with any person which is known or believed to be restricted from having any business relationship with or in Israel;

(5) Furnishing information about whether any person is a member of, has made contributions to, or is otherwise associated with or involved in the activities of any charitable or fraternal organization which supports the State of Israel; and,

(6) Paying, honoring, confirming, or otherwise implementing a letter of credit which contains any condition or requirement against doing business with the State of Israel.

(b) Under Section 8(a), the following types of activities are not forbidden ``compliance with the boycott," and are therefore exempted from Section 8(a)'s prohibitions listed in paragraphs (a)(1)-(6) above:

(1) Complying or agreeing to comply with requirements:

(i) Prohibiting the import of goods or services from Israel or goods produced or services provided by any business concern organized under the laws of Israel or by nationals or residents of Israel; or,

(ii) Prohibiting the shipment of goods to Israel on a carrier of Israel, or by a route other than that prescribed by the boycotting country or the recipient of the shipment;

(2) Complying or agreeing to comply with import and shipping document requirements with respect to the country of origin, the name of the carrier and route of shipment, the name of the supplier of the shipment or the name of the provider of other services, except that no information knowingly furnished or conveyed in response to such requirements may be stated in negative, blacklisting, or similar exclusionary terms, other than with respect to carriers or route of shipments as may be permitted by such regulations in order to comply with precautionary requirements protecting against war risks and confiscation;

(3) Complying or agreeing to comply in the normal course of business with the unilateral and specific selection by a boycotting country, or national or resident thereof, of carriers, insurance, suppliers of services to be performed within the boycotting country or specific goods which, in the normal course of business, are identifiable by source when imported into the boycotting country;

(4) Complying or agreeing to comply with the export requirements of the boycotting country relating to shipments or transshipments of exports to Israel, to any business concern of or organized under the laws of Israel, or to any national or resident of Israel;

(5) Compliance by an individual or agreement by an individual to comply with the immigration or passport requirements of any country with respect to such individual or any member of such individual's family or with requests for information regarding requirements of employment of such individual within the boycotting country; and,

(6) Compliance by a U.S. person resident in a foreign country or agreement by such person to comply with the laws of that country with respect to his or her activities exclusively therein, and such regulations may contain exceptions for such resident complying with the laws or regulations of that foreign country governing imports into such country of trademarked, trade named, or similarly specifically identifiable products, or components of products for his or her own use, including the performance of contractual services within that country, as may be defined by such regulations.

I.8 652.229-71 PERSONAL PROPERTY DISPOSITION AT POSTS ABROAD (AUG 1999)

Regulations at 22 CFR Part 136 require that U.S. Government employees and their families do not profit personally from sales or other transactions with persons who are not themselves entitled to exemption from import restrictions, duties, or taxes. Should the contractor experience importation or tax privileges in a foreign country because of its contractual relationship to the United States Government, the

contractor shall observe the requirements of 22 CFR Part 136 and all policies, rules, and procedures issued by the chief of mission in that foreign country.

I.9 CONTRACTOR IDENTIFICATION (JULY 2008)

Contract performance may require contractor personnel to attend meetings with government personnel and the public, work within government offices, and/or utilize government email.

Contractor personnel must take the following actions to identify themselves as non-federal employees:

1) Use an email signature block that shows name, the office being supported and company affiliation (e.g. "John Smith, Office of Human Resources, ACME Corporation Support Contractor");

2) Clearly identify themselves and their contractor affiliation in meetings;

3) Identify their contractor affiliation in Departmental e-mail and phone listings whenever contractor personnel are included in those listings; and

4) Contractor personnel may not utilize Department of State logos or indicia on business cards.

PART III - LIST OF DOCUMENTS, EXHIBITS AND OTHER ATTACHMENTS

SECTION J - LIST OF ATTACHMENTS

ATTACHMENT NO.	DESCRIPTION OF ATTACHMENT	NO. PAGES
Attachment 1	Sample Bank Letter of Guaranty	1
Attachment 2	Breakdown of Proposal Price by Divisions of Specifications	1
Attachment 3	Drawings	3
Attachment 4	Specifications	4

ATTACHMENT #1

SAMPLE LETTER OF BANK GUARANTY

Place ***[ ]***

Date ***[ ]***

Contracting Officer

U.S. Embassy, ***[Post name]***

[Mailing Address]

Letter of Guaranty No**. _____**

SUBJECT: Performance and Guaranty

The Undersigned, acting as the duly authorized representative of the bank, declares that the bank hereby guarantees to make payment to the Contracting Officer by check made payable to the Treasurer of the United States, immediately upon notice, after receipt of a simple written request from the Contracting Officer, immediately and entirely without any need for the Contracting Officer to protest or take any legal action or obtain the prior consent of the Contractor to show any other proof, action, or decision by an other authority, up to the sum of ***[Amount equal to 40% of the contract price in U.S. dollars during the period ending with the date of final acceptance and 10% of the contract price during contract guaranty period]***, which represents the deposit required of the contractor to guarantee fulfillment of his obligations for the satisfactory, complete, and timely performance of the said contract ***[contract number]*** for ***[description of work]*** at ***[location of work]*** in strict compliance with the terms, conditions and specifications of said contract, entered into between the Government and ***[name of contractor]*** of ***[address of contractor]*** on ***[contract date]***, plus legal charges of 10% per annum on the amount called due, calculated on the sixth day following receipt of the Contracting Officer's written request until the date of payment.

The undersigned agrees and consents that said contract may be modified by Change Order or Supplemental Agreement affecting the validity of the guaranty provided, however, that the amount of this guaranty shall remain unchanged.

The undersigned agrees and consents that the Contracting Officer may make repeated partial demands on the guaranty up to the total amount of this guaranty, and the bank will promptly honor each individual demand.

This letter of guaranty shall remain in effect until 3 months after completion of the guaranty period of Contract requirement.

_____-

Depository Institution: ***[Name]***

Address: Location: _____
Representative(s): _____ _____ State of Inc.: _____

_____ _____Corporate Seal:

_____ _____

Certificate of Authority is attached evidencing authority of the signer to bind the bank to this document.

ATTACHMENT #2

UNITED STATES DEPARTMENT OF STATE

BREAKDOWN OF PRICE BY DIVISIONS OF SPECIFICATIONS

(1) DIVISION/DESCRIPTION	(2) LABOR	(3) MATERIALS	(4) OVERHEAD	(5) PROFIT	(6) TOTAL
1. General Requirements/ Mobilization					
2. Site Work					
3. Concrete					
4. Masonry					
5. Metals					
6. Wood and Plastic					
7. Thermal and Moisture					
8. Doors and Windows					
9. Finishes					
10. Specialties					
11. Equipment					
12. Furnishings					
13. Special Construction					
14. Conveying Systems					

15. Mechanical					
16. Electrical					
TOTAL					

[Note to Contracting Officer: Contracting Officer must identify currency]

Allowance Items:

PROPOSAL PRICE TOTAL: ***[Note to Contracting Officer: Contracting Officer must identify currency]***

Alternates (list separately do not total)

Offeror: ***Date***

ATTACHMENT #3

PROJECT

Removal of 2 ft. tall 3477 rft deli hook design and fabrication Provision and installation of 5 ft. tall high 3659 rft. new steel deli hooks (anti-climb spikes) on top of the east, west, and south, side of perimeter wall and on fencing at MCAC and installation of 18 gauge MS sheet to isolate the vision with deli hook as per in the attached drawing.

Approximate length of walls is 3477 rft. and length of fencing at MCAC is182 rft.

Remove the existing 2 ft. high deli hook from top of perimeter wall and install the same on 1735 rft. T-wall (Base plate will be reduced to 4” from 9” to accommodate the Delhi hooks on T-Walls)

Provide and Install concertina wire over deli hooks installed on perimeter walls and T-wall

Note
Concertina wire (2’ dia) material cost and installation charges will be mentioned separately for this item.

WORK OUTLINE

To provide and install steel deli hooks 3659 rft. in length and 18 gauge MS sheet on top of the east, west and south sides of perimeter walls and fencing at MCAC NCC with complete finish in all aspects with 2 coats of paint over one coat of primer on MS Sheets and Delhi hooks.

WORK FORCE

The contractor is responsible for provision of all labor, equipment, and materials needed to complete this project as describe in this SOW.

In addition, the responsibility of PPEs to contractor’s work force during execution of job until completion is contractor’s responsibility.

SUPERVISION

Supervision of the job has to be carried out by contractor’s representative (Site Engineer, QC Inspector or Site Construction Engineer). Regular inspections and spot checks will be performed by client’s representative(s) such as Facilities Manager, Chief Engineer and/ or Maintenance Supervisor to verify the work as defined in the contract.

Contractor will be responsible to rectify snags indicated by client's representative during routine inspections or spot checks.

Contractor will be bound to rectify snags according to design and specifications and official correspondence (meetings, emails and letters) prior to handing over of the project.

LABOR, EQUIPMENT, MATERIALS

The contractor will be responsible for provision of all the labor, equipment, and materials needed to complete this project as described in this SOW.

WARRANTEE

The contractor shall guarantee all work involved in this project against all defects for a period of 1year.

The contractor will guarantee all materials against normal use for a period of 5 years.

In case of defect in material the contractor is liable to provide labor and defected material(s) to replace with appropriate items at its own expense within 5 days of notification.

HEALTH AND SAFETY REQUIREMENTS

The contractor shall agree to comply with any and all health and safety regulations as may be required by the US Consulate during the execution of this project.

- Site supervisor will ensure that all equipment used during the project is safe, calibrated and operational. All personnel on the job site shall have the appropriate safety equipment & Personal Protective Equipment (PPE), provided by the contractor.
- Contractor employees upon joining shall attend one hour safety briefing provided by the Safety Program Coordinator in US consulate office building.
- All ladders and scaffoldings should be inspected by contractor's safety officer before brought in use and should be used per safety instructions.
- Contractor to keep site clean and organized.
- Contractor to provide and install temporary railings and protect site workers from falls and injuries.

- At the end of each day's work, the site needs to be cleaned and organized with removal of debris.

The COR or CO reserves the right to stop the work, if any unsafe conditions are observed or encountered at any time.

Safeguard the public and US Consulate personnel, property, materials, supplies, and equipment exposed to contractor operations and activities.

HOURS OF PERFORMANCE

The contractor shall schedule all installation work during normal building hours which are defined as 0800 to1630 hours Monday to Friday, excluding local holidays unless approved in advance by the Contracting office's representative (COR).

ACCESS TO GOVERNMENT BUILDING

The contractor shall designate a representative who shall supervise the contractor's personnel and be the contractor's liaison with the American consulate. The contractor's employees shall be on- site only for contractual duties and not for any other business or purposes.

The Consulate Maintenance Section will supervise the contractor's performance on this project. One Consulate FSN will be assigned everyday to escort the Contractor's employees at all times while on US Consulate property. A US Consulate Maintenance Staff Supervisor will be in over all charge. Any questions/problems should be directed to him.

SCOPE OF WORK

<u>REMOVAL OF EXISTING DELI HOOKS</u>

Contractor should be responsible for safely removal of 2 ft. high existing deli hook from the perimeter wall approximate length of wall is 3477 rft.

- Contractor will be responsible to remove the deli hook from the perimeter wall and reinstall on top of the 12 ft. high T-wall.

Existing pattern of NCC should be followed, with following specification. All metal barriers will be attached to the top of the T-Wall with 16mm x 150 mm long epoxy anchor or equivalent and sunk into the masonry after every 2 ft. Fabrication of panel installation complete in all aspect as per site requirements.

ANTI CLIMB SPIKES

Fabrication and erection of 05 ft. high anti-climb spikes on top of the perimeter wall as per drawing and existing pattern of NCC, with following specification.
Length of each panel should be 8 Ft.. Base plate of panel will be 150mm wide 8mm thick MS Plate welded on top of the perimeter wall. Vertical member as 5' long 18mm dia round bars @ 6"c/c. Arched member will be 18" long 18mm dia round bar curved outwards at the matching radius of existing spikes and welded with vertical member. The edge of both members will be grinded to form a uniform Nib and further hardened to prevent form bending. A continuous 18mm dia horizontal bracing will be provided to secure the bars into position. 10 Numbers of cleats (size 200mm x 100mm x 6mm) MS Plate will be provided with each panel welded with 2"x4"x1/4" top horizontal member of perimeter wall five from inside and five from outside in order to prevent spikes from buckling.

- The contractor will manufacture and install five ft. high steel security hooks (anti climb spikes). Complete detail for fabrication and installation of steel security hooks document and drawings is attached with this SOW
- All metal barriers will be attached to the top of the masonry wall with 16mm x 150 mm long epoxy expansion anchor or equivalent and sunk into the masonry, all metal parts solidly welded together.

INSTALLATION OF MS SHEET

Contractor is responsible for provision and installation of 18 gauge MS sheet with deli hook as per attached drawings.

The MS sheet will be supported with a skeleton of deli hook. MS Sheet will be welded with the edges of each rod of deli hook section and each base plate stock will be placed vertically and horizontally every six inches. All steel elements will be solidly welded together.

No screws, bolts or wires will be used to assemble the Sheet;

Contractor is responsible to make 2" dia hole opening to prevent air pressure one foot below from the top of the sheet and one ft. above from the bottom after every two ft. For details see attached drawing.

PAINT JOB

The entire metal surface will be thoroughly cleaned by means of wire brush and duster to remove rust/ dust or contamination. One coat of Red oxide and two coats of enamel paint matching with color of perimeter wall. One finish coat of enamel paint matching

with the existing perimeter wall will be applied after erection of fence and spikes (if required).

- Contractor will be responsible to clean the site and remove the debris and trash from the site and dispose it off at a suitable disposal place by using his own transport and labor.

- **Note:** After installation of security hooks the contractor shall be responsible to repair any damage caused to the walls, baseboards, and floor etc during installation of anti climb fence, deli hooks and shall do the touch up paint match with the existing colors of the buildings.

ATTACHMENT #4

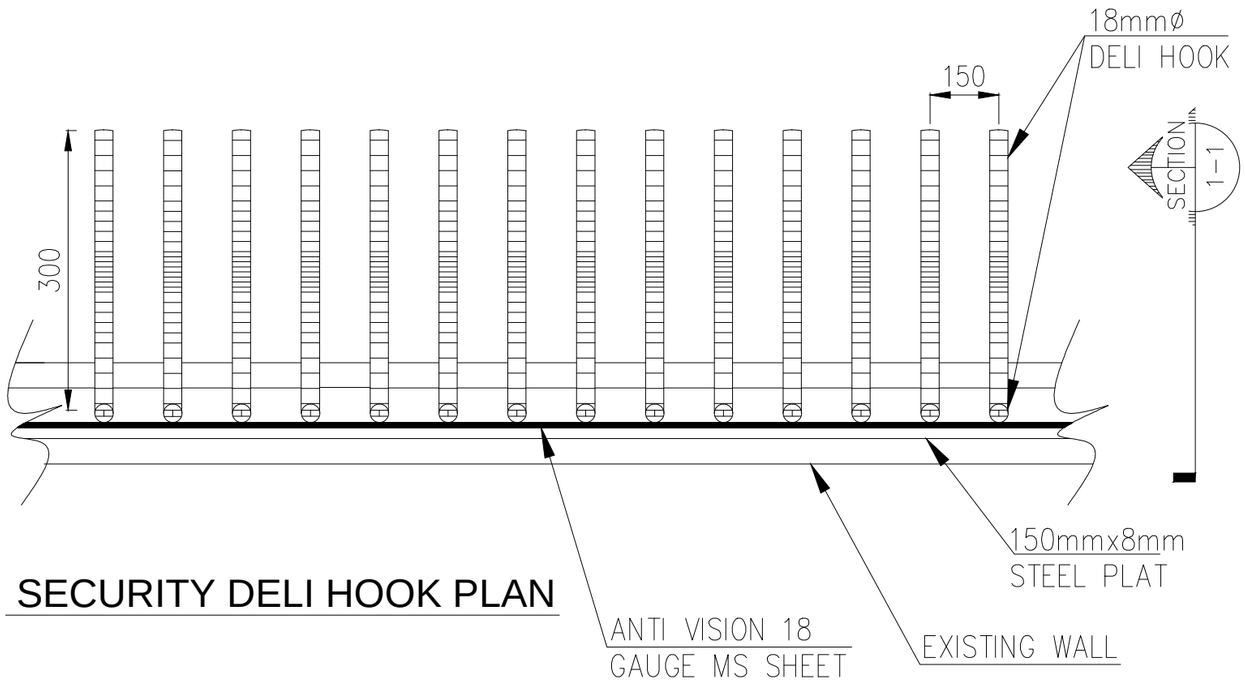

SECURITY DELI HOOK PLAN

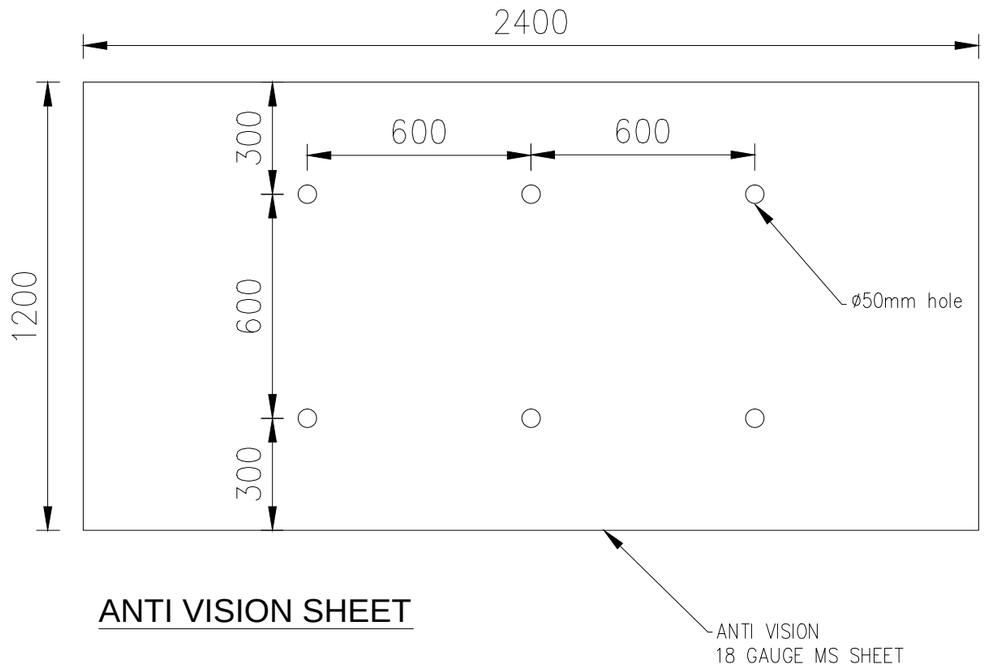

ANTI VISION SHEET

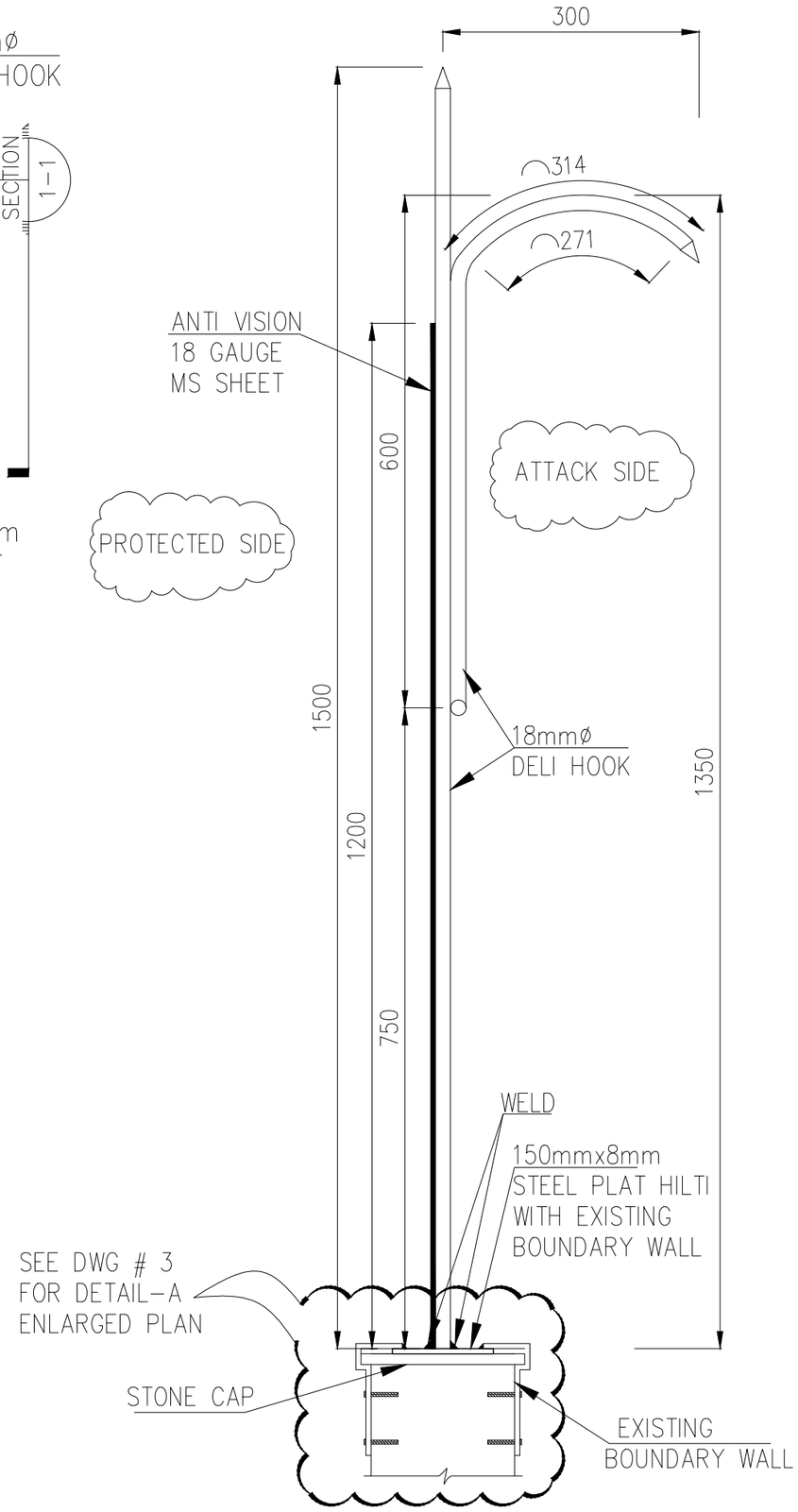

SECTION 1-1

United States Department of State
OFFICE OF OVERSEAS BUILDINGS OPERATIONS
Washington, D.C.

NEW
CONSULATE COMPOUND
for
KARACHI, PAKISTAN

WARNING: This document is the property of the U.S. Government. Further reproduction and/or distribution outside the contractor team is prohibited without the express written approval of: U.S. Department of State ATTN: Stephen Graves Washington, D.C. 20520.

Revisions

Rev Number	Revision Description	Revision Date
01	ADD Ø50mm HOLE	FEB., 07-2013
02	steel plat size revised	Mar., 16-2013

NCC

Release For Construction:

Drawing Title: SECURITY HOOKS, ANTI VISION SHEET LAYOUT PLAN AND SECTION 1-1

OBO Project Number

CADD File Name

Drawing Scale: AS NOTED

CADD Plot Scale: 1:1

Date: 28, Nov. 2012

Drawn By: SUK

Checked By: MM

Approved By: IM

Sheet Number: 001

Classification: UNCLASSIFIED

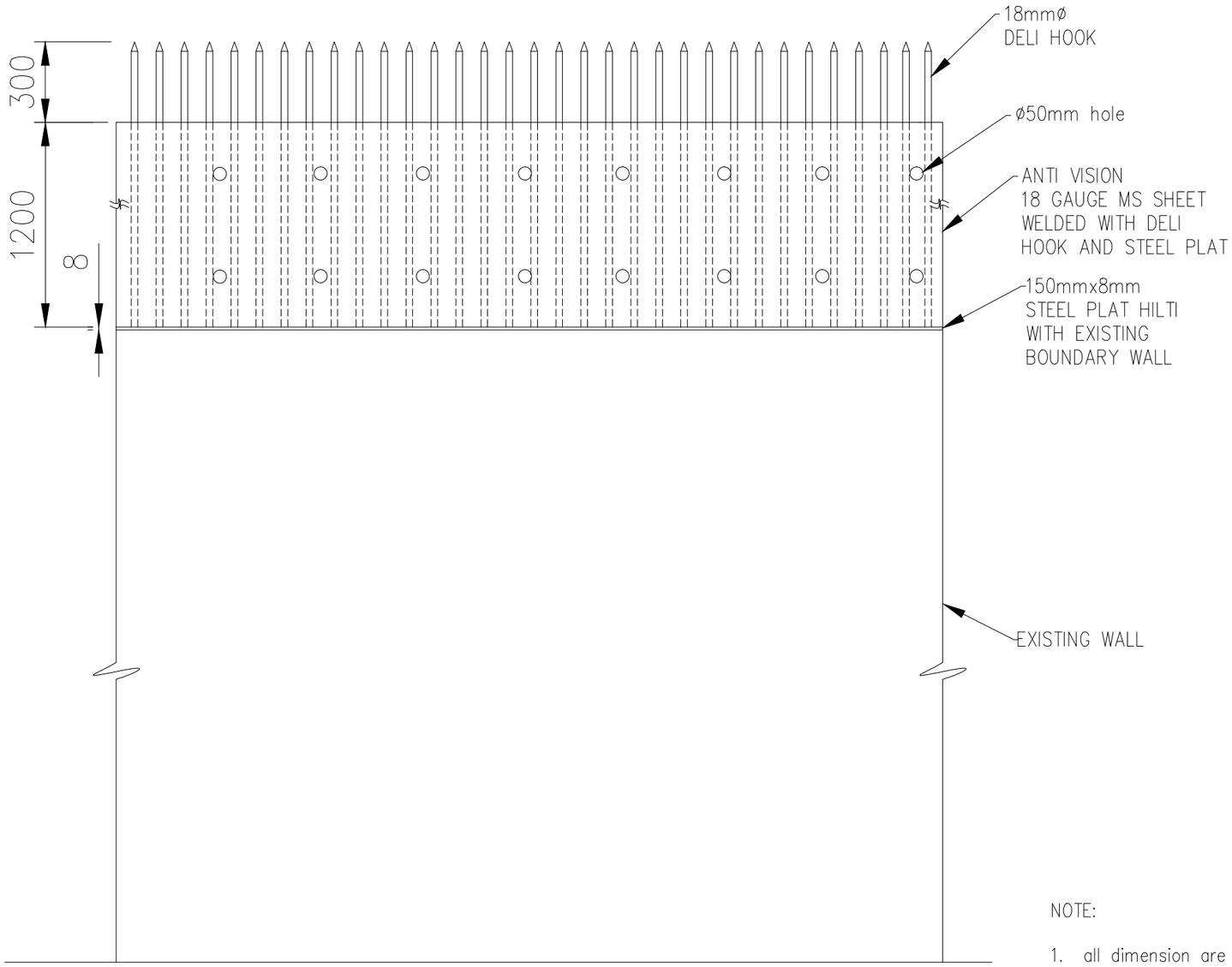

ELEVATION

NOTE:

1. all dimension are in millimeters.
2. welding surfaces deposited shall be smooth, uniform, and free from fins, tears, cracks, and other discontinuities.
3. welding surfaces and their adjacent areas shall also be free from loose or thick scales, slag, rust, moisture, grease, and other foreign materials.
4. Prior to welding over previously deposited metal, all slag shall be removed and brushing or other suitable means shall be used to clean the weld and adjacent base metal. Cleaning of completed welds shall include removing slag, and cleaning the weld and adjacent base metal.
5. The contractor shall clean the job site of excess materials

United States Department of State
OFFICE OF OVERSEAS BUILDINGS OPERATIONS
Washington, D.C.

NEW
CONSULATE COMPOUND
for
KARACHI, PAKISTAN

WARNING: This document is the property of the U.S. Government. Further reproduction and/or distribution outside the contractor team is prohibited without the express written approval of: U.S. Department of State ATTN: Stephen Graves Washington, D.C. 20520.

Revisions

Rev Number	Revision Description	Revision Date
01	ADD Ø50mm HOLE	FEB., 07-2013
02	steel plat size revised	Mar., 16-2013

NCC

Release For Construction:

Drawing Title: ELEVATION

OBO Project Number	Drawing Scale: AS NOTED	
CADD File Name	CADD Plot Scale: 1 : 1	
	Date: 28, Nov. 2012	Sheet Number: 002
	Drawn By: SUK	
	Checked By: MM	
	Approved By: IM	
	Classification: UNCLASSIFIED	

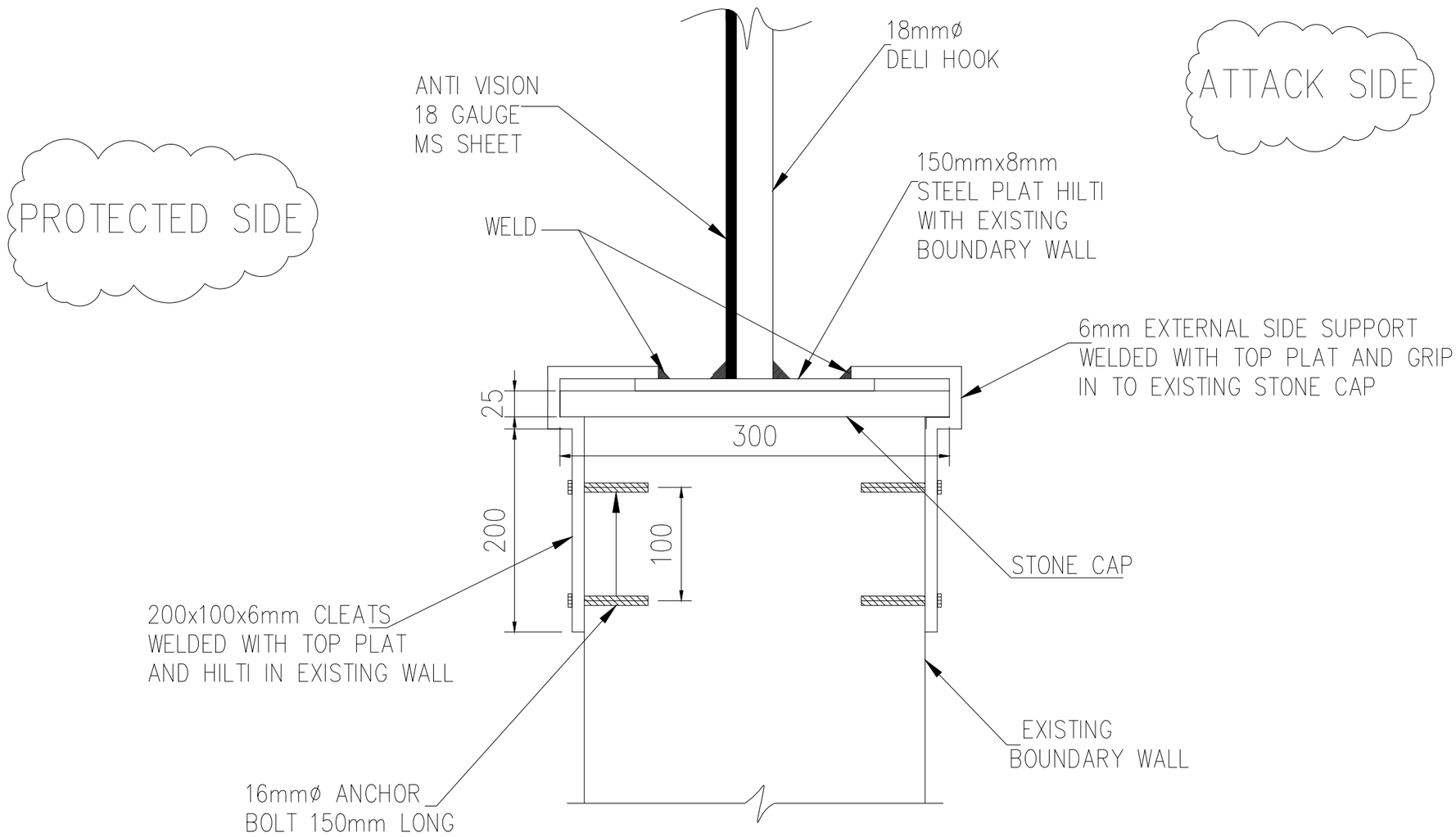

DETAIL-A

NOTE:

1. all dimension are in millimeters.
2. welding surfaces deposited shall be smooth, uniform, and free from fins, tears, cracks, and other discontinuities.
3. welding surfaces and their adjacent areas shall also be free from loose or thick scales, slag, rust, moisture, grease, and other foreign materials.
4. Prior to welding over previously deposited metal, all slag shall be removed and brushing or other suitable means shall be used to clean the weld and adjacent base metal. Cleaning of completed welds shall include removing slag, and cleaning the weld and adjacent base metal.
5. The contractor shall clean the job site of excess materials

United States Department of State
OFFICE OF OVERSEAS BUILDINGS OPERATIONS
Washington, D.C.

NEW
CONSULATE COMPOUND
for
KARACHI, PAKISTAN

WARNING: This document is the property of the U.S. Government. Further reproduction and/or distribution outside the contractor team is prohibited without the express written approval of: U.S. Department of State ATTN: Stephen Graves Washington, D.C. 20520.

Revisions		
Rev Number	Revision Description	Revision Date

NCC

Release For Construction:

Drawing Title: DETAIL–A

OBO Project Number	Drawing Scale: AS NOTED	
CADD File Name	CADD Plot Scale: 1 : 1	
	Date: 14, March, 2013	Sheet Number: 003
	Drawn By: SUK	
	Checked By: MM	
	Approved By: IM	
	Classification: UNCLASSIFIED	

PART IV - REPRESENTATIONS AND INSTRUCTIONS

SECTION K - REPRESENTATIONS, CERTIFICATIONS AND OTHER STATEMENTS OF OFFERORS OR QUOTERS

K.1 52.203-2 CERTIFICATE OF INDEPENDENT PRICE DETERMINATION (APR 1985)

(a) The offeror certifies that-

(1) The prices in this offer have been arrived at independently, without, for the purpose of restricting competition, any consultation, communication, or agreement with any other offeror or competitor relating to-

(i) Those prices;

(ii) The intention to submit an offer;, or

(iii) The methods or factors used to calculate the prices offered.

(2) The prices in this offer have not been and will not be knowingly disclosed by the offeror, directly or indirectly, to any other offeror or competitor before bid opening (in the case of a sealed bid solicitation) or contract award (in the case of a negotiated solicitation) unless otherwise required by law; and

(3) No attempt has been made or will be made by the offeror to induce any other concern to submit or not to submit an offer for the purpose of restricting competition.

(b) Each signature on the offer is considered to be a certification by the signatory that the signatory-

(1) Is the person in the offeror's organization responsible for determining the prices being offered in this bid or proposal, and that the signatory has not participated and will not participate in any action contrary to subparagraph (a)(1) through (a)(3) above; or

(2) (i) Has been authorized, in writing, to act as agent for the following principals in certifying that those principals have not participated, and will not participate in any action contrary to subparagraphs (a)(1) through (a)(3) above ***[insert full name of person(s) in the offeror's organization responsible for determining the prices offered in this bid or proposal, and the title of his or her position in the offeror's organization]*****;** and

(ii) As an authorized agent, does certify that the principals named in subdivision (b)(2)(i) above have not participated, and will not participate, in any action contrary to subparagraphs (a)(1) through (a)(3) above; and

(iii) As an agent, has not personally participated, and will not participate, in any action contrary to subparagraphs (a)(1) through (a)(3) above.

(c) If the offeror deletes or modifies subparagraph (a)(2) above, the offeror must furnish with its offer a signed statement setting forth in detail the circumstances of the disclosure.

K.2 52.203-11 CERTIFICATION AND DISCLOSURE REGARDING PAYMENTS TO INFLUENCE CERTAIN FEDERAL TRANSACTIONS (SEP 2007)

(a) Definitions. As used in this provision – “Lobbying contact” has the meaning provided at 2 USC 1602(8). The terms “agency”, “influencing or attempting to influence”, “officer or employee of an agency”, “person”, “reasonable compensation”, and “regularly employed” are defined in the FAR clause of this solicitation entitled Limitation on Payments to Influence Certain Federal Transactions (52.203-12).

(b) Prohibition. The prohibition and exceptions contained in the FAR clause of this solicitation entitled “Limitation on Payments to Influence Certain Federal Transactions” (52.203-12) are hereby incorporated by reference in this provision.

(c) Certification. The offeror, by signing its offer, hereby certifies to the best of his or her knowledge and belief that no Federal appropriated funds have been paid or will be paid to any person for

influencing or attempting to influence an officer or employee of any agency, a Member of Congress, an officer or employee of Congress, or an employee of a member of Congress on its behalf in connection with the awarding of this contract.

(d) Disclosure. If any registrants under the Lobbying Disclosure Act of 1995 have made a lobbying contract on behalf of the offeror with respect to this contract, the offeror shall complete and submit, with its officer, OMB Standard Form LLL, Disclosure of Lobbying Activities, to provide the name of the registrants. The offeror need not report regularly employed officers or employees of the offeror to whom payments of reasonable compensation were made.

(e) Penalty. Submission of this certification and disclosure is a prerequisite for making or entering into this contract imposed by 31 USC 1352. Any persons who makes an expenditure prohibited under this provision or who fails to file or amend the disclosure required to be filed or amended by this provision, shall be subject to a civil penalty of not less than $10,000, and not more than $150,000, for each failure.

K.3 52.204-3 TAXPAYER IDENTIFICATION (OCT 98)

(a) Definitions:

"Common parent", as used in this provision, means that corporate entity that owns or controls an affiliated group of corporations that files its Federal income tax returns on a consolidated basis, and of which the offeror is a member.

“Taxpayer Identification Number (TIN)", as used in this provision, means the number required by the IRS to be used by the offeror in reporting income tax and other returns. The TIN may be either a Social Security Number or an Employer Identification Number.

(b) All offerors must submit the information required in paragraphs (d) through (f) of this provision in order to comply with debt collection requirements of 31 U.S.C. 7701(c) and 3325 (d), reporting requirements of 26 USC 6041, 6041A, and 6050M and implementing regulations issued by the Internal Revenue Service (IRS). If the resulting contract is subject to the reporting requirements described in FAR 4.904, the failure or refusal by the offeror to furnish the information may result in a 31 percent reduction of payments otherwise due under the contract.

(c) The TIN may be used by the Government to collect and report on any delinquent amounts arising out of the offeror's relationship with the Government (3l USC 7701(c)(3)). If the resulting contract is subject to the payment reporting requirements described in FAR 4.904, the TIN provided hereunder may be matched with IRS records to verify the accuracy of the offeror's TIN.

(d) Taxpayer Identification Number (TIN).

TIN: _____

___ TIN has been applied for.

___ TIN is not required because:

___ Offeror is a nonresident alien, foreign corporation, or foreign partnership that does not have income effectively connected with the conduct of a trade or business in the U.S. and does not have an office or place of business or a fiscal paying agent in the U.S.;

___ Offeror is an agency or instrumentality of a foreign government;

___ Offeror is an agency or instrumentality of the Federal Government.

(e) Type of Organization.

___ Sole Proprietorship;

___ Partnership:

___ Corporate Entity (not tax exempt);

___ Corporate Entity (tax exempt);

___ Government entity (Federal, State, or local);

___ Foreign government;

___ International organization per 26 CFR 1.6049-4;

___ Other _____

(f) Common Parent.

___ Offeror is not owned or controlled by a common parent as defined in paragraph (a) of this clause.

___ Name and TIN of common parent;

Name _____

TIN _____

K.4 52.204-8 Annual Representations and Certifications. (Dec 2012)

(a)(1) The North American Industry Classification System (NAICS) code for this acquisition is **236220 for Construction Management, commercial and institutional building or Warehouse construction; 237310 for Construction Management, highway road, street or bridge; 237990 for Construction Management, outdoor recreation facility; 236118 for Construction Management, residential remodeling; 237110 for Construction Management, water and sewage line and related structures**.

(2) The small business size standard is $33.5 million.

(3) The small business size standard for a concern which submits an offer in its own name, other than on a construction or service contract, but which proposes to furnish a product which it did not itself manufacture, is 500 employees.

(b)(1) If the clause at 52.204-7, Central Contractor Registration, is included in this solicitation, paragraph (d) of this provision applies.

(2) If the clause at 52.204-7 is not included in this solicitation, and the offeror is currently registered in CCR, and has completed the ORCA electronically, the offeror may choose to use paragraph (d) of this provision instead of completing the corresponding individual representations and certifications in the solicitation. The offeror shall indicate which option applies by checking one of the following boxes:

[ ] (i) Paragraph (d) applies.

[ ] (ii) Paragraph (d) does not apply and the offeror has completed the individual representations and certifications in the solicitation.

(c)(1) The following representations or certifications in ORCA are applicable to this solicitation as indicated:

(i) 52.203-2, Certificate of Independent Price Determination. This provision applies to solicitations when a firm-fixed-price contract or fixed-price contract with economic price adjustment is contemplated, unless—

(A) The acquisition is to be made under the simplified acquisition procedures in Part 13;

(B) The solicitation is a request for technical proposals under two-step sealed bidding procedures; or

(C) The solicitation is for utility services for which rates are set by law or regulation.

(ii) 52.203-11, Certification and Disclosure Regarding Payments to Influence Certain Federal Transactions. This provision applies to solicitations expected to exceed $150,000.

(iii) 52.204-3, Taxpayer Identification. This provision applies to solicitations that do not include the clause at 52.204-7, Central Contractor Registration.

(iv) 52.204-5, Women-Owned Business (Other Than Small Business). This provision applies to solicitations that—

(A) Are not set aside for small business concerns;

(B) Exceed the simplified acquisition threshold; and

(C) Are for contracts that will be performed in the United States or its outlying areas.

(v) 52.209-2, Prohibition on Contracting with Inverted Domestic Corporations—Representation. This provision applies to solicitations using funds appropriated in fiscal years 2008, 2009, 2010 or 2012.

(vi) 52.209-5, Certification Regarding Responsibility Matters. This provision applies to solicitations where the contract value is expected to exceed the simplified acquisition threshold.

(vii) 52.214-14, Place of Performance—Sealed Bidding. This provision applies to invitations for bids except those in which the place of performance is specified by the Government.

(viii) 52.215-6, Place of Performance. This provision applies to solicitations unless the place of performance is specified by the Government.

(ix) 52.219-1, Small Business Program Representations (Basic & Alternate I). This provision applies to solicitations when the contract will be performed in the United States or its outlying areas.

(A) The basic provision applies when the solicitations are issued by other than DoD, NASA, and the Coast Guard.

(B) The provision with its Alternate I applies to solicitations issued by DoD, NASA, or the Coast Guard.

(x) 52.219-2, Equal Low Bids. This provision applies to solicitations when contracting by sealed bidding and the contract will be performed in the United States or its outlying areas.

(xi) 52.222-22, Previous Contracts and Compliance Reports. This provision applies to solicitations that include the clause at 52.222-26, Equal Opportunity.

(xii) 52.222-25, Affirmative Action Compliance. This provision applies to solicitations, other than those for construction, when the solicitation includes the clause at 52.222-26, Equal Opportunity.

(xiii) 52.222-38, Compliance with Veterans' Employment Reporting Requirements. This provision applies to solicitations when it is anticipated the contract award will exceed the simplified acquisition threshold and the contract is not for acquisition of commercial items.

(xiv) 52.223-1, Biobased Product Certification. This provision applies to solicitations that require the delivery or specify the use of USDA–designated items; or include the clause at 52.223-2, Affirmative Procurement of Biobased Products Under Service and Construction Contracts.

(xv) 52.223-4, Recovered Material Certification. This provision applies to solicitations that are for, or specify the use of, EPA–designated items.

(xvi) 52.225-2, Buy American Act Certificate. This provision applies to solicitations containing the clause at 52.225-1.

(xvii) 52.225-4, Buy American Act—Free Trade Agreements—Israeli Trade Act Certificate. (Basic, Alternates I, II, and III) This provision applies to solicitations containing the clause at 52.225-3.

(A) If the acquisition value is less than $25,000, the basic provision applies.

(B) If the acquisition value is $25,000 or more but is less than $50,000, the provision with its Alternate I applies.

(C) If the acquisition value is $50,000 or more but is less than $77,494, the provision with its Alternate II applies.

(D) If the acquisition value is $77,494 or more but is less than $100,000, the provision with its Alternate III applies.

(xviii) 52.225-6, Trade Agreements Certificate. This provision applies to solicitations containing the clause at 52.225-5.

(xix) 52.225-20, Prohibition on Conducting Restricted Business Operations in Sudan—Certification. This provision applies to all solicitations.

(xx) 52.225-25, Prohibition on Contracting with Entities Engaging in Sanctioned Activities Relating to Iran—Representation and Certification. This provision applies to all solicitations.

(xxi) 52.226-2, Historically Black College or University and Minority Institution Representation. This provision applies to—

(A) Solicitations for research, studies, supplies, or services of the type normally acquired from higher educational institutions; and

(B) For DoD, NASA, and Coast Guard acquisitions, solicitations that contain the clause at 52.219-23, Notice of Price Evaluation Adjustment for Small Disadvantaged Business Concerns.

(2) The following certifications are applicable as indicated by the Contracting Officer:

[*Contracting Officer check as appropriate.*]

__ (i) 52.219-22, Small Disadvantaged Business Status.

__ (A) Basic.

__ (B) Alternate I.

__ (ii) 52.222-18, Certification Regarding Knowledge of Child Labor for Listed End Products.

__ (iii) 52.222-48, Exemption from Application of the Service Contract Act to Contracts for Maintenance, Calibration, or Repair of Certain Equipment Certification.

__ (iv) 52.222-52, Exemption from Application of the Service Contract Act to Contracts for Certain Services–Certification.

__ (v) 52.223-9, with its Alternate I, Estimate of Percentage of Recovered Material Content for EPA–Designated Products (Alternate I only).

__ (vi) 52.227-6, Royalty Information.

__ (A) Basic.

__(B) Alternate I.

__ (vii) 52.227-15, Representation of Limited Rights Data and Restricted Computer Software.

(d) The offeror has completed the annual representations and certifications electronically via the Online Representations and Certifications Application (ORCA) website accessed through https://www.acquisition.gov. After reviewing the ORCA database information, the offeror verifies by submission of the offer that the representations and certifications currently posted electronically that apply to this solicitation as indicated in paragraph (c) of this provision have been entered or updated within the last 12 months, are current, accurate, complete, and applicable to this solicitation (including the business size standard applicable to the NAICS code referenced for this solicitation), as of the date of this offer and are incorporated in this offer by reference (see FAR 4.1201); except for the changes identified

below [*offeror to insert changes, identifying change by clause number, title, date*]. These amended representation(s) and/or certification(s) are also incorporated in this offer and are current, accurate, and complete as of the date of this offer.

FAR CLAUSE #	TITLE	DATE	CHANGE
_____	_____	_____	_____

Any changes provided by the offeror are applicable to this solicitation only, and do not result in an update to the representations and certifications posted on ORCA.

(End of provision)

K.5 52.209-2 Prohibition on Contracting with Inverted Domestic Corporations—Representation. (May 2011)

(a) *Definition*. "Inverted domestic corporation" and "subsidiary" have the meaning given in the clause of this contract entitled Prohibition on Contracting with Inverted Domestic Corporations (52.209-10).

(b) *Relation to Internal Revenue Code*. An inverted domestic corporation as herein defined does not meet the definition of an inverted domestic corporation as defined by the Internal Revenue Code at 26 U.S.C. 7874 .

(c) *Representation*. By submission of its offer, the offeror represents that—

(1) It is not an inverted domestic corporation; and

(2) It is not a subsidiary of an inverted domestic corporation.

(End of provision)

K.6 52.209-5 CERTIFICATION REGARDING RESPONSIBILITY MATTERS (APR 2010)

(a)(1) The Offeror certifies, to the best of its knowledge and belief, that—

(i) The Offeror and/or any of its Principals—

(A) Are o are not o presently debarred, suspended, proposed for debarment, or declared ineligible for the award of contracts by any Federal agency;

(B) Have o have not o, within a three-year period preceding this offer, been convicted of or had a civil judgment rendered against them for: commission of fraud or a criminal offense in connection with obtaining, attempting to obtain, or performing a public (Federal, State, or local) contract or subcontract; violation of Federal or State antitrust statutes relating to the submission of offers; or commission of embezzlement, theft, forgery, bribery, falsification or destruction of records, making false statements, tax evasion, violating Federal criminal tax laws, or receiving stolen property (if offeror checks "have", the offeror shall also see 52.209-7, if included in this solicitation);

(C) Are o are not o presently indicted for, or otherwise criminally or civilly charged by a governmental entity with, commission of any of the offenses enumerated in paragraph (a)(1)(i)(B) of this provision;

(D) Have o, have not o, within a three-year period preceding this offer, been notified of any delinquent Federal taxes in an amount that exceeds $3,000 for which the liability remains unsatisfied.

(1) Federal taxes are considered delinquent if both of the following criteria apply:

(i) *The tax liability is finally determined*. The liability is finally determined if it has been assessed. A liability is not finally determined if there is a pending administrative or judicial challenge. In the case of a judicial challenge to the liability, the liability is not finally determined until all judicial appeal rights have been exhausted.

(ii) *The taxpayer is delinquent in making payment*. A taxpayer is delinquent if the taxpayer has failed to pay the tax liability when full payment was due and required. A taxpayer is not delinquent in cases where enforced collection action is precluded.

(2) *Examples*.

(i) The taxpayer has received a statutory notice of deficiency, under I.R.C. § 6212, which entitles the taxpayer to seek Tax Court review of a proposed tax deficiency. This is not a delinquent tax because it is not a final tax liability. Should the taxpayer seek Tax Court review, this will not be a final tax liability until the taxpayer has exercised all judicial appeal rights.

(ii) The IRS has filed a notice of Federal tax lien with respect to an assessed tax liability, and the taxpayer has been issued a notice under I.R.C. § 6320 entitling the taxpayer to request a hearing with the IRS Office of Appeals contesting the lien filing, and to further appeal to the Tax Court if the IRS determines to sustain the lien filing. In the course of the hearing, the taxpayer is entitled to contest the underlying tax liability because the taxpayer has had no prior opportunity to contest the liability. This is not a delinquent tax because it is not a final tax liability. Should the taxpayer seek tax court review, this will not be a final tax liability until the taxpayer has exercised all judicial appeal rights.

(iii) The taxpayer has entered into an installment agreement pursuant to I.R.C. § 6159. The taxpayer is making timely payments and is in full compliance with the agreement terms. The taxpayer is not delinquent because the taxpayer is not currently required to make full payment.

(iv) The taxpayer has filed for bankruptcy protection. The taxpayer is not delinquent because enforced collection action is stayed under 11 U.S.C. 362 (the Bankruptcy Code).

(ii) The Offeror has o has not o, within a three-year period preceding this offer, had one or more contracts terminated for default by any Federal agency.

(2) “Principal,” for the purposes of this certification, means an officer, director, owner, partner, or a person having primary management or supervisory responsibilities within a business entity (*e.g.*, general manager; plant manager; head of a division or business segment; and similar positions).

This Certification Concerns a Matter Within the Jurisdiction of an Agency of the United States and the Making of a False, Fictitious, or Fraudulent Certification May Render the Maker Subject to Prosecution Under Section 1001, Title 18, United States Code.

(b) The Offeror shall provide immediate written notice to the Contracting Officer if, at any time prior to contract award, the Offeror learns that its certification was erroneous when submitted or has become erroneous by reason of changed circumstances.

(c) A certification that any of the items in paragraph (a) of this provision exists will not necessarily result in withholding of an award under this solicitation. However, the certification will be considered in connection with a determination of the Offeror's responsibility. Failure of the Offeror to furnish a certification or provide such additional information as requested by the Contracting Officer may render the Offeror nonresponsible.

(d) Nothing contained in the foregoing shall be construed to require establishment of a system of records in order to render, in good faith, the certification required by paragraph (a) of this provision. The knowledge and information of an Offeror is not required to exceed that which is normally possessed by a prudent person in the ordinary course of business dealings.

(e) The certification in paragraph (a) of this provision is a material representation of fact upon which reliance was placed when making award. If it is later determined that the Offeror knowingly rendered an erroneous certification, in addition to other remedies available to the Government, the Contracting Officer may terminate the contract resulting from this solicitation for default.

(End of provision)

K.7. 52.225-18 Place of Manufacture (Sept 2006)

(a) Definitions. As used in this clause—

" Manufactured end product" means any end product in Federal Supply Classes (FSC) 1000-9999, except—

(1) FSC 5510, Lumber and Related Basic Wood Materials;
(2) Federal Supply Group (FSG) 87, Agricultural Supplies;
(3) FSG 88, Live Animals;
(4) FSG 89, Food and Related Consumables;
(5) FSC 9410, Crude Grades of Plant Materials;
(6) FSC 9430, Miscellaneous Crude Animal Products, Inedible;
(7) FSC 9440, Miscellaneous Crude Agricultural and Forestry Products;
(8) FSC 9610, Ores;
(9) FSC 9620, Minerals, Natural and Synthetic; and
(10) FSC 9630, Additive Metal Materials.

"Place of manufacture" means the place where an end product is assembled out of components, or otherwise made or processed from raw materials into the finished product that is to be provided to the Government. If a product is disassembled and reassembled, the place of reassembly is not the place of manufacture.

(b) For statistical purposes only, the offeror shall indicate whether the place of manufacture of the end products it expects to provide in response to this solicitation is predominantly—

(1) [ ] In the United States (Check this box if the total anticipated price of offered end products manufactured in the United States exceeds the total anticipated price of offered end products manufactured outside the United States); or

(2) [ ] Outside the United States.

K.8 52.225-20 PROHIBITION ON CONDUCTING RESTRICTED BUSINESS OPERATIONS IN SUDAN—CERTIFICATION (AUG 2009)

(a) *Definitions*. As used in this provision—

"Business operations" means engaging in commerce in any form, including by acquiring, developing, maintaining, owning, selling, possessing, leasing, or operating equipment, facilities, personnel, products, services, personal property, real property, or any other apparatus of business or commerce.

"Marginalized populations of Sudan" means—

(1) Adversely affected groups in regions authorized to receive assistance under section 8(c) of the Darfur Peace and Accountability Act (Pub. L. 109-344) (50 U.S.C. 1701 note); and

(2) Marginalized areas in Northern Sudan described in section 4(9) of such Act.

"Restricted business operations" means business operations in Sudan that include power production activities, mineral extraction activities, oil-related activities, or the production of military equipment, as those terms are defined in the Sudan Accountability and Divestment Act of 2007 (Pub. L. 110-174). Restricted business operations do not include business operations that the person conducting the business can demonstrate—

(1) Are conducted under contract directly and exclusively with the regional government of southern Sudan;

(2) Are conducted pursuant to specific authorization from the Office of Foreign Assets Control in the Department of the Treasury, or are expressly exempted under Federal law from the requirement to be conducted under such authorization;

(3) Consist of providing goods or services to marginalized populations of Sudan;

(4) Consist of providing goods or services to an internationally recognized peacekeeping force or humanitarian organization;

(5) Consist of providing goods or services that are used only to promote health or education; or

(6) Have been voluntarily suspended.

(b) *Certification*. By submission of its offer, the offeror certifies that it does not conduct any restricted business operations in Sudan.

K.9 AUTHORIZED CONTRACT ADMINISTRATOR

If the offeror does not fill-in the blanks below, the official who signed the offer will be deemed to be the offeror's representative for Contract Administration, which includes all matters pertaining to payments.

Name:

Address:

Telephone Number:

K.10 652.225-70 ARAB LEAGUE BOYCOTT OF ISRAEL (AUG 1999)

(a) Definitions. As used in this provision:

Foreign person means any person other than a United States person as defined below.

United States person means any United States resident or national (other than an individual resident outside the United States and employed by other than a United States person), any domestic concern (including any permanent domestic establishment of any foreign concern), and any foreign subsidiary or affiliate (including any permanent foreign establishment) of any domestic concern which is controlled in fact by such domestic concern, as provided under the Export Administration Act of 1979, as amended.

(b) Certification. By submitting this offer, the offeror certifies that it is not:

(1) Taking or knowingly agreeing to take any action, with respect to the boycott of Israel by Arab League countries, which Section 8(a) of the Export Administration Act of 1979, as amended (50 U.S.C. 2407(a)) prohibits a United States person from taking; or,

(2) Discriminating in the award of subcontracts on the basis of religion.

K.11 652.228-70 DEFENSE BASE ACT – COVERED CONTRACTOR EMPLOYEES (JUN 2006)

(a) Bidders/offerors shall indicate below whether or not any of the following categories of employees will be employed on the resultant contract, and, if so, the number of such employees:

Category	Yes/No	Number
(1) United States citizens or residents		
(2) Individuals hired in the United States, regardless of citizenship		
(3) Local nationals or third country nationals where contract performance takes place in a country *where there are no* local workers' compensation laws		Local nationals: _____ Third Country Nationals: _____
(4) Local nationals or third country nationals where contract performance takes place in a country where there *are* local workers' compensation laws		Local nationals: _____ Third Country Nationals: _____

(b) The contracting officer has determined that for performance in the country of Pakistan.

✓ Workers' compensation laws exist that will cover local nationals and third country nationals.

Workers' compensation laws do not exist that will cover local nationals and third country nationals.

(c) If the bidder/offeror has indicated "yes" in block (a)(4) of this provision, the bidder/offeror shall not purchase Defense Base Act insurance for those employees. However, the bidder/offeror shall assume liability toward the employees and their beneficiaries for war-hazard injury, death, capture, or detention, in accordance with the clause at FAR 52.228-4.

(d) If the bidder/offeror has indicated "yes" in blocks (a)(1), (2), or (3) of this provision, the bidder/offeror shall compute Defense Base Act insurance costs covering those employees pursuant to the terms of the contract between the Department of State and the Department's Defense Base Act insurance carrier at the rates specified in DOSAR 652.228-74, Defense Base Act Insurance Rates – Limitation. If DOSAR provision 652.228-74 is not included in this solicitation, the bidder/offeror shall notify the contracting officer before the closing date so that the solicitation can be amended accordingly.

SECTION L - INSTRUCTIONS, CONDITIONS, AND NOTICES TO

OFFERORS OR QUOTERS

L.1 52.252-1 SOLICITATION PROVISIONS INCORPORATED BY REFERENCE (FEB 1998)

This contract incorporates the following provisions by reference, with the same force and effect as if they were given in full text. Upon request, the Contracting Officer will make their full text available. The offeror is cautioned that the listed provisions may include blocks that must be completed by the offeror and submitted with its quotation or offer. In lieu of submitting the full text of those provisions, the offeror may identify the provision by paragraph identifier and provide the appropriate information with its quotation or offer. Also, the full text of a solicitation provision may be accessed electronically at:

http://acquisition.gov/far/index.html/ or, http://farsite.hill.af.mil/search.htm

These addresses are subject to change. If the Federal Acquisition Regulation (FAR) is not available at the locations indicated above, use of an Internet "search engine" (such as, Yahoo, Infoseek, Alta Vista, etc.) is suggested to obtain the latest location of the most current FAR.

http://www.statebuy.state.gov/

FEDERAL ACQUISITION REGULATION (48 CFR CH. 1)

52.204-6	CONTRACTOR INDENTIFICATION NUMBER-DATA UNIVERSAL NUMBERING SYSTEM (DUNS) NUMBER	DEC 2012
52.214-34	SUBMISSION OF OFFERS IN THE ENGLISH LANGUAGE	APR 1991
52.215-1	INSTRUCTIONS TO OFFERORS – COMPETITIVE ACQUISITION	JAN 2004
52.236-28	PREPARATION OF PROPOSALS – CONSTRUCTION	OCT 1997

L.2 SOLICITATION PROVISIONS IN FULL TEXT

52.216-1 TYPE OF CONTRACT (APR 1984)

The Government contemplates award of a firm fixed price contract resulting from this solicitation.

52.233-2 SERVICE OF PROTEST (SEPT 2006)

(a) Protests, as defined in section 33.101 of the Federal Acquisition Regulation, that are filed directly with an agency, and copies of any protests that are filed with the General Accounting Office (GAO), shall be served on the Contracting Officer (addressed as follows) by obtaining written and dated acknowledgment of receipt from ***Management Officer, American Consulate General, Mai, Kolachi Road, Karachi***

(b) The copy of any protest shall be received in the office designated above within one day of filing a protest with the GAO.

L.3 QUALIFICATIONS OF OFFERORS

Offerors must be technically qualified and financially responsible to perform the work described in this solicitation. At a minimum, each Offeror must meet the following requirements:

(1) Be able to understand written and spoken English;

(2) Have an established business with a permanent address and telephone listing;

(3) Be able to demonstrate prior construction experience with suitable references for company and Project manager;

(4) Have the necessary personnel, equipment and financial resources available to perform the work;

(5) Have all licenses and permits required by local law;

(6) Meet all local insurance requirements;

(7) Have the ability to obtain a performance and guarantee bond and a payment bond, or to post adequate performance security, such as irrevocable letters of credit or guarantees issued by a reputable financial institution;

(8) Have no adverse criminal record; and

(9) Have no political or business affiliation which could be considered contrary to the interests of the United States**.**

L.4 REVIEW OF DOCUMENTS

Each Offeror is responsible for:

(1) Obtaining a complete set of contract drawings and specifications;

(2) Thoroughly reviewing such documents and understanding their requirements;

(3) Visiting the project site and becoming familiar with all working conditions, local laws and regulations; and

(4) Determining that all materials, equipment and labor required for the work are available.

Any ambiguity in the solicitation, including specifications and contract drawings, must be reported immediately to the Contracting Officer. Any prospective Offeror who requires a clarification, explanation or interpretation of the contract requirements must make a request to the Contracting Officer not less than ten working days before the closing date of the solicitation. Offerors may rely ONLY upon written interpretations by the Contracting Officer.

L.5 SUBMISSION OF OFFERS

L.5.1 SUMMARY OF INSTRUCTIONS

Each offer shall consist of the following physically separate volumes:

Volume	Title	No. of Copies*
I	Executed Standard Form 1442, *Solicitation, Offer and Award (Construction, Alteration, or Repair)*, and completed Section K	2
II	Price Proposal and Completed Section B. The price proposal shall include a completed Section J, Attachment 4, "Breakdown of Proposal Price by Divisions of Specifications".	2
III	Performance schedule in the form of a "bar chart" and Business Management/Technical Proposal.	2

Submit the complete offer to the address indicated at Block 7 of Standard Form (SF) 1442, if mailed, or the address set forth below, if hand delivered (if this is left blank, the address is the same as that in Block 7 of SF 1442).

_____

_____

_____

_____

The offeror shall identify and explain/justify any deviations, exceptions, or conditional assumptions taken with respect to any of the instructions or requirements of this solicitation in the appropriate volume of the offer.

**** Original + 2 copies***

L.5.2 DETAILED INSTRUCTIONS

L.5.2.1 Volume I: Standard Form (SF) 1442 and Section K. Complete blocks 14 through 20C of the SF 1442 and all of Section K.

L.5.2.2 Volume II: Price proposal and Section B. The price proposal shall consist of completion of Section B and Section J, Attachment 4, "BREAKDOWN OF PROPOSAL PRICE BY DIVISIONS OF SPECIFICATIONS. Complete all applicable portions of this form in each relevant category (such as., labor, materials, etc.).

L.5.2.3 Volume III: Performance schedule and Business Management/Technical Proposal.

(a) Present the performance schedule in the form of a "bar chart" indicating when the various portions of the work will be commenced and completed within the required contract completion schedule. This bar chart shall be in sufficient detail to clearly show each segregable portion of work and its planned commencement and completion date.

(b) The Business Management/Technical Proposal shall be in two parts, including the following information:

PROPOSED WORK INFORMATION - Provide the following:

(1) A list of the names, addresses and telephone numbers of the owners, partners, and principal officers of the Offeror;

(2) The name and address of the Offeror's field superintendent for this project; and

(3) A list of the names, addresses, and telephone numbers of subcontractors and principal materials suppliers to be used on the project, indicating what portions of the work will be performed by them.

EXPERIENCE AND PAST PERFORMANCE - List all contracts and subcontracts your company has held over the past three years for the same or similar work. Provide the following information for each contract and subcontract:

(1) Customer's name, address, and telephone numbers of customer's lead contract and technical personnel;

(2) Contract number and type;

(3) Date of the contract award place(s) of performance, and completion dates;

(4) Contract dollar value;

(5) Brief description of the work, including responsibilities;

(6) Comparability to the work under this solicitation;

(7) Brief discussion of any major technical problems and their resolution;

(8) Method of acquisition (fully competitive, partially competitive, or noncompetitive), and the basis for award (cost/price, technical merit, etc.);

(9) Cost/price management history, including any cost overruns and under runs, and cost growth and changes;

(10) Percent turnover of contract key technical personnel per year; and

(11) Any terminations (partial or complete) and the reason (convenience or default)

(12) Identify any accidents or safety concerns that occurred and resolution.

L.6 52.236-27 SITE VISIT (FEB 1995)

(a) The clauses at 52.236-2, Differing Site Conditions, and 52.236-3, Site Investigations and Conditions Affecting the Work, will be included in any contract awarded as a result of this solicitation. Accordingly, offerors or quoters are urged and expected to inspect the site where the work will be performed.

(b) A site visit has been scheduled for ***March 13, 2013***

(c) Participants will meet at ***American Consulate General, Plot No. 3-5, Mai Kolachi Road, Karachi***

L.7 652.206-70 COMPETITION ADVOCATE/OMBUDSMAN (AUG 1999) (DEVIATION)

(a) The Department of State's Competition Advocate is responsible for assisting industry in removing restrictive requirements from Department of State solicitations and removing barriers to full and open competition and use of commercial items. If such a solicitation is considered competitively restrictive or does not appear properly conducive to competition and commercial practices, potential offerors are encouraged to first contact the contracting office for the respective solicitation. If concerns remain unresolved, contact the Department of State Competition Advocate on (703) 516-1693, by fax at (703) 875-6155, or write to: U.S. Department of State, Competition Advocate, Office of the Procurement Executive (A/OPE), Suite 900, SA-27, Washington, DC 20522-2712.

(b) The Department of State's Acquisition Ombudsman has been appointed to hear concerns from potential offerors and contractors during the pre-award and post-award phases of this acquisition. The role of the ombudsman is not to diminish the authority of the contracting officer, the Technical Evaluation Panel or Source Evaluation Board, or the selection official. The purpose of the ombudsman is to facilitate the communication of concerns, issues, disagreements, and recommendations of interested parties to the appropriate Government personnel, and work to resolve them. When requested and appropriate, the ombudsman will maintain strict confidentiality as to the source of the concern. The ombudsman does not participate in the evaluation of proposals, the source selection process, or the adjudication of formal contract disputes. Interested parties are invited to contact the contracting activity ombudsman, ***[Note to Contracting Officer: insert name]***, at ***[Note to Contracting Officer: insert telephone and fax numbers].*** For an American Embassy or overseas post, refer to the numbers below for the Department Acquisition Ombudsman. Concerns, issues, disagreements, and recommendations which cannot be resolved at a contracting activity level may be referred to the Department of State Acquisition Ombudsman at (703) 516-1693, by fax at (703) 875-6155, or write to: Department of State, Acquisition Ombudsman, Office of the Procurement Executive (A/OPE), Suite 900, SA-27, Washington, DC 20522-2712.

L.8 MAGNITUDE OF CONSTRUCTION PROJECT

It is anticipated that the range in price of this contract will be: ***$240,000-$250,000***

L.9 FINANCIAL STATEMENT

If asked by the Contracting Officer, the offeror shall provide a current statement of its financial condition, certified by a third party, that includes:

Income (profit-loss) Statement that shows profitability for the past ***three*** years;

Balance Sheet that shows the assets owned and the claims against those assets, or what a firm owns and what it owes; and

Cash Flow Statement that shows the firm's sources and uses of cash during the most recent accounting period. This will help the Government assess a firm's ability to pay its obligations.

The Government will use this information to determine the offeror's financial responsibility and ability to perform under the contract. Failure of an offeror to comply with a request for this information may cause the Government to determine the offeror to be nonresponsible.

SECTION M - EVALUATION FACTORS FOR AWARD

M.1 EVALUATION OF PROPOSALS

M.1.1 GENERAL. To be acceptable and eligible for evaluation, proposals must be prepared in accordance with Section L - INSTRUCTIONS, CONDITIONS AND NOTICES TO OFFERORS, and must meet all the requirements set forth in the other sections of this solicitation.

M.1.2 BASIS FOR AWARD.

The Government intends to award a contract resulting from this solicitation to the lowest priced, technically acceptable offeror who is a responsible contractor. The evaluation procedures are set forth below:

(a) INITIAL EVALUATION. The Government will evaluate all proposals received to ensure that each proposal is complete in terms of submission of each required volume, as specified in Section L. The Government may reject proposals which are missing a significant amount of the required information.

(b) TECHNICAL EVALUATION. After the Initial Evaluation, the Government will review those proposals remaining for consideration to determine technical acceptability. The Government will consider the following evaluation criteria in determining the acceptability of the technical proposal. To be considered technically acceptable, the technical proposal must provide the information requested in Section L and conform to the requirements of the solicitation.

- The Proposed Work Information described in L.5.2.3(b).
- The qualifications and experience of the offeror's proposed project superintendent and subcontractors.
- Experience and Past Performance (L.5.2.3.(b)). The Government may contact references to verify the quality of the past performance.
- The performance schedule (bar chart) (Section L.5.2.3.).
- Responses to all other technical requirements contained in the solicitation.

(c) The Government will make a responsibility determination by analyzing whether the apparent successful offeror complies with the requirements of FAR 9.1, including:

- adequate financial resources or the ability to obtain them;
- ability to comply with the required performance period, taking into consideration all existing commercial and governmental business commitments;
- satisfactory record of integrity and business ethics;
- necessary organization, experience, and skills or the ability to obtain them;
- necessary equipment and facilities or the ability to obtain them; and
- be otherwise qualified and eligible to receive an award under applicable laws and regulations.

The Government reserves the right to reject proposals that are unreasonably low or high in price. Unsuccessful offerors will be notified in accordance with FAR 15.5.

M.1.3 AWARD SELECTION

The Government will review the prices of all technically acceptable firms and award the contract to the lowest priced, technically acceptable, responsible offeror.

M.2 AWARD WITHOUT DISCUSSIONS

Under FAR provision 52.215-1 (included in Section L of this RFP), award of this contract may be made based on initial proposals and without holding discussions, following FAR 15.306(a)(3).

M.3 SEPARATE CHARGES

Separate charges, in any form, are not solicited. For example, any charges for failure to exercise an option are unacceptable.