ALL POSTS FURNISHED WITH STANDARD WHITE PAINTED FINISH (MPL-20W)
RED (MPL-20R) AND YELLOW (MPL-20Y) AVAILABLE AS AN OPTION

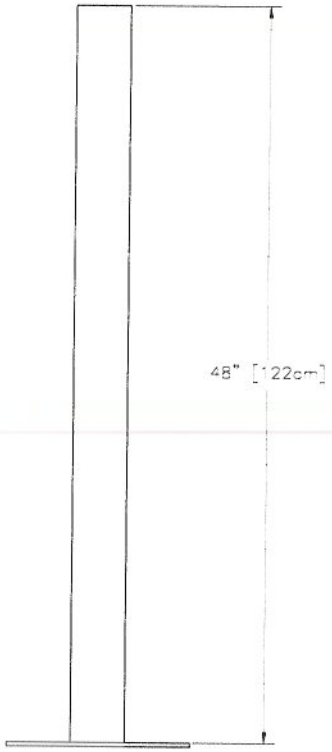

MODEL MPL-20

48" FLANGED POST

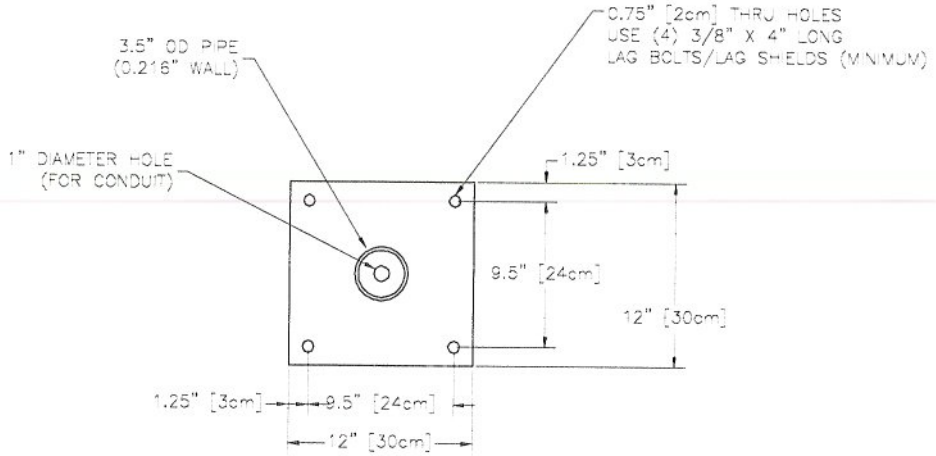

BASE FLANGE (TYPICAL)

REV	DESCRIPTION	DRWN BY	DATE	APPVD BY	DATE
A	ECO #2004-110	JNF	08/10/04		

THE WORK LEADS CHANGE WITH REGARD TO DISTRIBUTION, PROPERTY AND TAKE SECRET OF DELTA SCIENTIFIC CORPORATION, AND IS NOT TO BE DISCLOSED OR DISCLOSED TO ANY MANUFACTURE, DESIGN OR CONSTRUCTION WITHOUT EXPRESS AUTHORIZATION OF DELTA SCIENTIFIC CORPORATION. THE RECEIPT BY ACCEPTANCE OF THIS DRAWING, AGREES SUBJECT TO THE ABOVE RESTRICTIONS AS TO USE AND DISCLOSURE OF ITS CONTENTS.

© 1998
ALL RIGHTS RESERVED

UNLESS OTHERWISE NOTED DIMENSIONS ARE IN INCHES

TOLERANCES
X = ±.250/7°
.XX = ±.060/1°
.XXX = ±.010/1°
ANGLES = ±.5°

SURFACE FINISH
125/

REMOVE ALL BURRS & BREAK SHARP EDGES .02 MAX

DELTA SCIENTIFIC CORPORATION
24901 WEST AVE. STANFORD
VALENCIA, CA 91355 U.S.A.
(800) 247-1800 FAX (805) 257-0617

FLANGED MOUNTING POST
48 INCH [122 CM] HIGH

DRAWN BY	DATE	DRAWING NO.	REV.
J. FRIEND	07/07/98	MPL-20	A
CHKD BY	DATE		
APPVD BY	DATE	SCALE 1:6 (D SIZE)	SHEET 1 OF 1

ITEM	REQ'D	DESCRIPTION/MATERIAL	CUT or SHEAR	CUT LENGTH or SHEAR SIZE	ENDCUT	WT/ft or WT/sq'	WT EA	TOT WT	REF NO
1	1	MID TUBE	PART		90/90		9.6	9.6	10993
2	2	STEEL, 3" SCH 40 PIPE (3.5" OD)	CUT	4.50	90/90	7.58	2.8	5.7	
3	1	STEEL, 3.5" SCH 40 PIPE (4" OD)	CUT	4.00	90/90	9.11	3.0	3.0	
							TOTAL WEIGHT:	18.3	

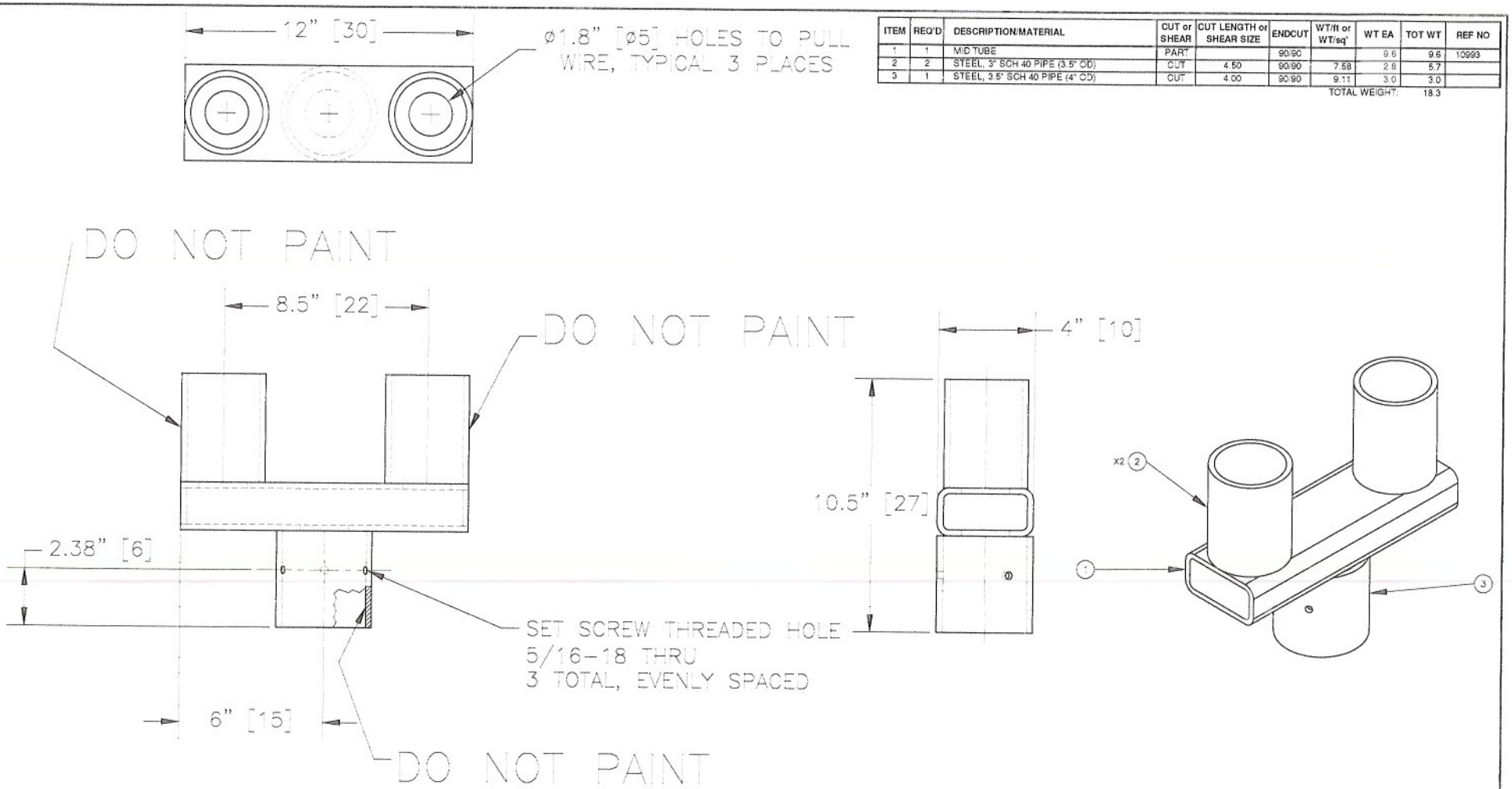

MODEL MPL-34 BACK TO BACK BRACKET

(1729-00)

NOTES:

ZINC PLATE PRIOR TO PAINT.
DO NOT PAINT WHERE INDICATED.

REV	DESCRIPTION	DRWN BY	DATE	APPV'D BY	DATE
B	ECO #2010-163	JTB	10/25/10		
A	SEE ECO 2009-227	L.G.	12/10/09	JNF	12/10/09

THIS DRAWING CONTAINS OTHERWISE NOTED PROPRIETARY AND TRADE SECRET OF DELTA SCIENTIFIC CORPORATION. IT SHALL NOT BE DISCLOSED, REPRODUCED OR USED FOR MANUFACTURE, DESIGN OR CONSTRUCTION WITHOUT THE EXPRESS AUTHORIZATION OF DELTA SCIENTIFIC CORPORATION. THE RECIPIENT BY ACCEPTING THIS DRAWING, AGREES THAT NOT TO BE USED OR USED FOR ANY OTHER PURPOSE AND TO ALLOW USE OF BY UNAUTHORIZED PERSONS.

© 1995 ALL RIGHTS RESERVED

UNLESS OTHERWISE NOTED DIMENSIONS ARE IN INCHES

TOLERANCES
X = ± .060/FT
XX = ± .030/FT
XXX = ± .010/FT
ANGLES = ± 5°

SURFACE FINISH 125

REMOVE ALL BURRS & BREAK SHARP EDGES .02 MAX

DELTA

DELTA SCIENTIFIC CORPORATION
40355 DELTA LANE
PALMDALE, CA 93551 U.S.A.
(661) 375-1100 FAX (661) 375-1109

MODEL MPL-34 BACK TO BACK BRACKET
GENERAL ARRANGEMENT

DRWN BY	DATE	DRAWING NO.	REV.
J.WRIEND	01/20/99	MPL-34	B
CHKD BY	DATE		
APPV'D BY	DATE	SCALE 1:2 (D SIZE)	SHEET 1 OF 1

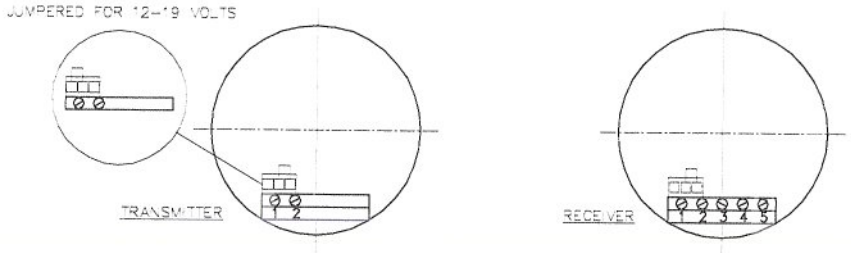

CONNECTIONS

P/N NO.
1 (+) 12-24 VAC/DC
2 (-) (SHOWN JUMPERED FOR 20-24 VOLTS)
3 NOT USED
4 NOT USED
5 NOT USED

P/N NO.
1 (+) 12-24 VAC/DC
2 (-) 12-24 VAC/DC
3 RELAY - N/O
4 RELAY - N/C
5 RELAY - COMMON

A SYSTEM CONSISTING OF A PULSED ENERGY TRANSMITTER AND A MATCHING RECEIVER TO DETECT THE PRESENCE OF A BODY IN ITS PATH. SYSTEM IGNORES OR IS INSENSITIVE TO TRANSIENT INTERFERENCE SIGNALS AND/OR OTHER CONTINUOUS SOURCES OF I.R.

RANGE -- 100 FEET MAX. (THIS DIMENSION HAS BEEN DERATED FOR RAIN AND FOG).
INPUT VOLTAGE - 12 OR 24 VAC/VDC
OUTPUT RELAY SPDT - RATING 1 AMPS @ 30 VAC/VDC
FLUSH MOUNTING WEATHER PROOF.

NOTE: INDICATING LED AND ALIGNMENT SCREWS ARE OBSCURED BY FRONT LENS UNDER NORMAL CONDITIONS. LENS CAN BE REMOVED FOR SET UP AND ADJUSTMENT BY OBSERVING THE MAGNITUDE OF INTERNAL SIGNAL.

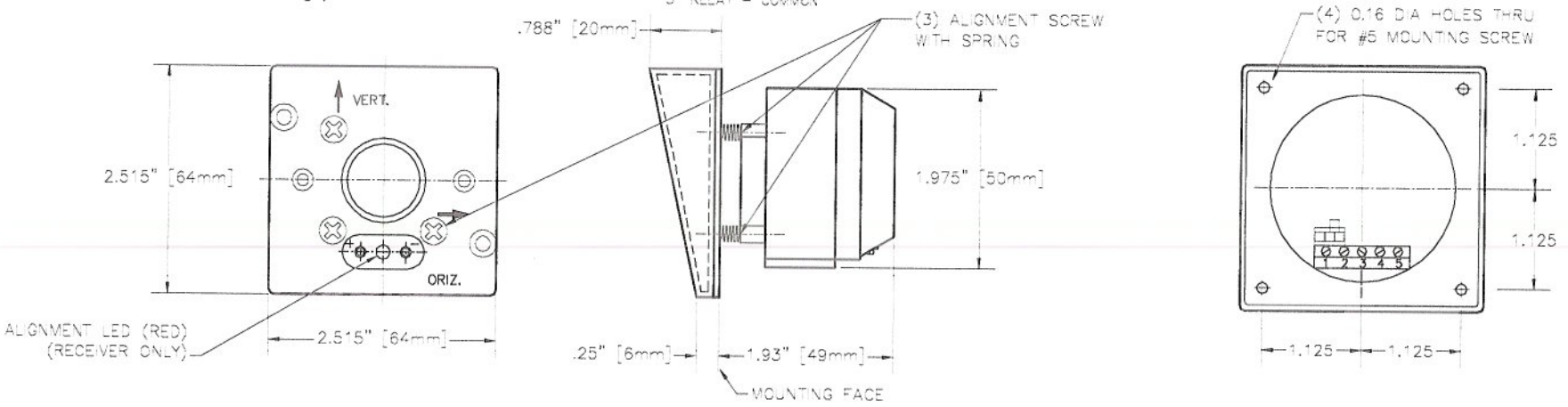

TRANSMITTER & RECEIVER OUTLINE

THIS DRAWING UNLESS OTHERWISE NOTED, REMAINS THE CONFIDENTIAL PROPERTY AND TRADE SECRET OF DELTA SCIENTIFIC CORPORATION. IT SHALL NOT BE DISCLOSED, REPRODUCED OR USED FOR MANUFACTURE, DESIGN OR CONSTRUCTION WITHOUT THE EXPRESS AUTHORIZATION OF DELTA SCIENTIFIC CORPORATION. THE RECIPIENT BY ACCEPTING THIS DRAWING, ASSUMES CUSTODY THEREOF AND UNDER THE ABOVE TERMS AGREES NOT TO ALLOW USE OF BY UNAUTHORIZED PERSONS

© 2006
ALL RIGHTS RESERVED

UNLESS OTHERWISE NOTED DIMENSIONS ARE IN INCHES

TOLERANCES
.X = ±.050/FT
.XX = ±.030/FT
.XXX = ±.010/FT
ANGLES = ±.5°

SURFACE FINISH
125

REMOVE ALL BURRS & BREAK SHARP EDGES .02 MAX

DELTA SCIENTIFIC CORPORATION
40355 DELTA LANE
PALMDALE, CA 93551
(661) 575-1100 FAX (661) 575-1109

MODEL D-168 Mark I
INFRARED BEAM SENSOR SYSTEM

DRWN BY	DATE	DRAWING NO.	REV.
JNF	03/13/06	D-168.1	-
CHKD BY	DATE		
APP'D BY	DATE	SCALE: 1.25:1 (B SIZE)	SHEET: SHEET 1 OF 1

Infrared Photocell Synchronized
Instruction Manual

Introduction

The photoelectric cells D-168 Mark 1 is a safety device suitable for automatic access. Each pair consists of a modulated infrared ray transmitter (TX) and a receiver (RX) with a dual relay output contact. Both cells have an optical system (lens) to concentrate the ray, an electronic circuit as immunity to sunlight and synchronizing system for installing two pairs of photocells. The container is in a glass reinforced plastic material offering high resistance mechanical damage and weathering.

The D-168 Mark 1 is wall embeddable and operates at 12 to 24 VAC/VDC. Two outer cases are provided to enhance the mechanical installation.

Installation

The receiver and transmitter must be located one in front of the other and fixed so as to be as accurately aligned as possible. In the case of errors or in extreme cases, the inside bodies of the photocells can be slanted vertically or horizontally +/- 15°.

If two parallel pairs of photocells are used, the rays of one pair can interfere with the other pair causing a malfunction. In case of alternating current it is advised to set both transmitters so they are synchronized. Synchronizing requires the pairs of photocells to function on different phases. Therefore it is important to pay attention to the wiring supply. The phases must be the same in the first pair, but inverted in the second pair (Figure 1). Cut jumper to synchronize (Figure 4).

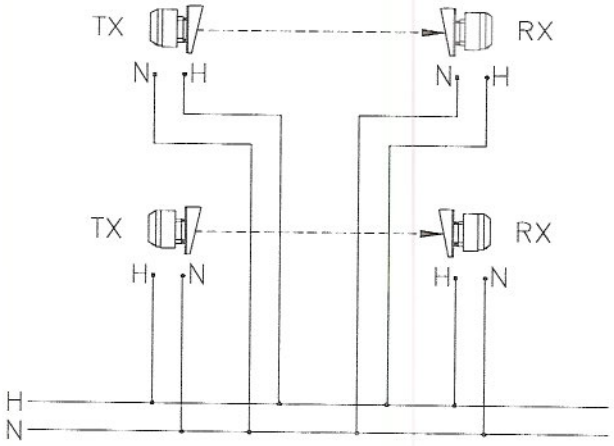

(Figure 1)

Copyright 2006 Delta Scientific Corporation
All Rights Reserved

Avoid placing both receivers on one side and both transmitters on the other; alternate receivers with transmitters (Figure 2).

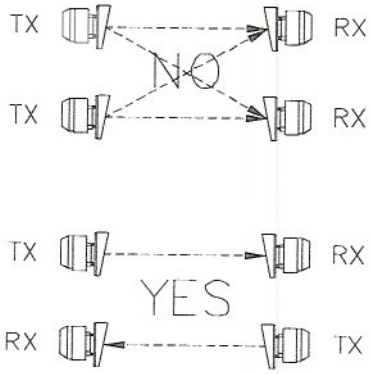

(Figure 2)

The sensors should be installed by qualified personnel in accordance with all applicable codes and standards established by the laws in force in the country of installation. Failure to comply with the instructions could prejudice correct functioning of the equipment, creating a hazard source for people, consequently THE MANUFACTURER declines all responsibility for any malfunction and/or damage as a result of such failure.

A) Reference Figure 3, insert the covers (1) and line up the TX and RX as much as possible. They can be fastened as follows:

- using two screws in the holes on the bottom (2)
- using foamed adhesive material or concrete,
- using four screws (3) for attachment to studs or sheet metal.

B) Make the electrical connections according to the drawings. To facilitate installation and centering, it is recommended to keep the cables between the outside cover and the photocell as short as possible.

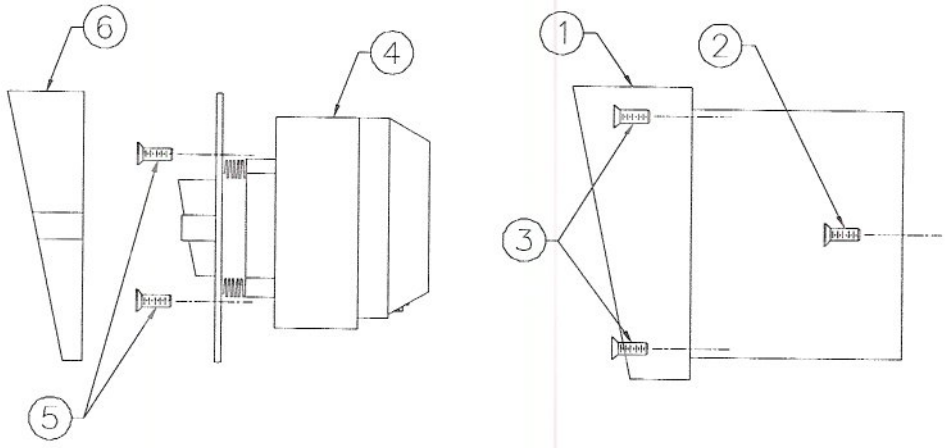

(Figure 3)

Copyright 2006 Delta Scientific Corporation
All Rights Reserved

C) Fasten the photocell (4) using the supplied screws (5).

D) Test the photocell and center it. After adjustment, install the lens covers (6).

Power Supply and Switch Outputs

The photocells are powered with 24 VAC or VDC. For voltages lower than 19 V plug in the jumper provided (Figure 4).

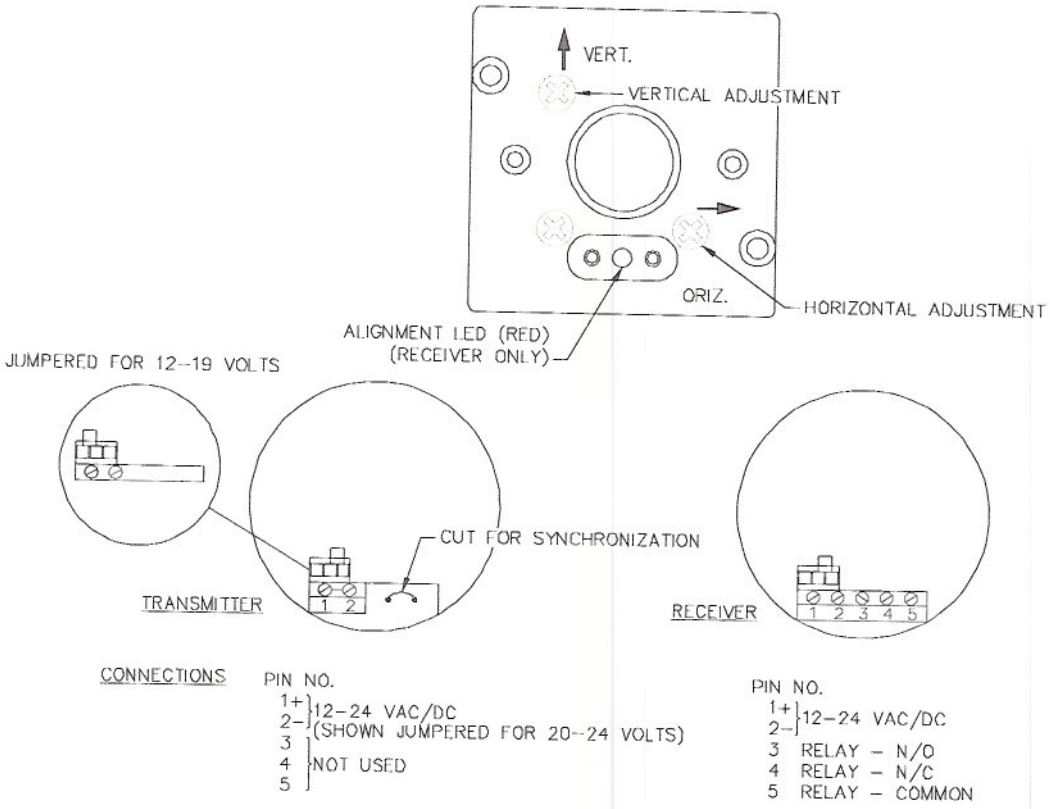

(Figure 4)

Centering and Testing

Check that the voltage is the same as required for the photocells and that the power is on. At this point, if the alignment of the pair is reasonably centered, the receiver should switch the output. If this does not happen proceed with centering.

To facilitate alignment, the inside bodies of both the transmitter and receiver are mounted on springs and with the aid of the two adjustment screws they can be swiveled horizontally and/or vertically (Figure 4). The receiver is equipped with a red LED that switches off when the photocell is centered. The photocells should be centered as close as possible, even if they initially appear aligned.

Copyright 2006 Delta Scientific Corporation
All Rights Reserved

Check functioning by passing in front of the infrared ray several times (the red LED on the receiver should turn on and the relay should switch). Repeat this also after the covers of the receiver and transmitter have been installed.

The centering filter (Figure 5) is used for an additional test and to be sure that even in the worst conditions, i.e. fog or rain, everything works properly.

The test is quick and simple: place the film on one of the fronts and check that the photocell is working properly. If it does not it means the photocells are at the limit of its working range or the alignment is not accurate. ***Note:*** Remember to remove the plastic film when you have finished testing.

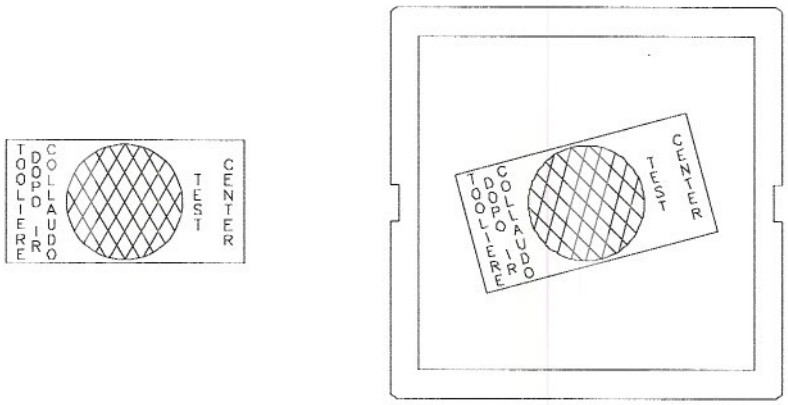

(Figure 5)

Technical Data

Type	Modulated Infrared
Range	200 feet [60 meters] (Note 1)
Power Supply	12 V - 24 V VDC or VAC +/- 20%
Power Consumption TX + RX	24 V 105mA (60mA + 45mA)
	12 V 155mA (85mA + 70mA)
Operating Temperature	-4°F to 140°F [-20°C to 60°C]
Contact Rating	1 Amp at 30 VDC

(Note 1) Due to rain, fog, dust or misalignment, the range may be reduced by 50 to 70 percent.

EC Declaration of Conformity

The producer, Telecoma S.r.l, declares that the product FT501 (Delta Model D-168 Mark 1) used as photocells for gate openers comply with essential requirements of the **Directives 89/336 (EMC)** and **73/23 (LVD)** and their amendments, when used for their intended purpose. The above mentioned product is meant as an integral part of one of the installation configurations as shown in our catalogs.

Place and Date: **Conegliano, 04/06/2001**

General Manager

Copyright 2006 Delta Scientific Corporation
All Rights Reserved

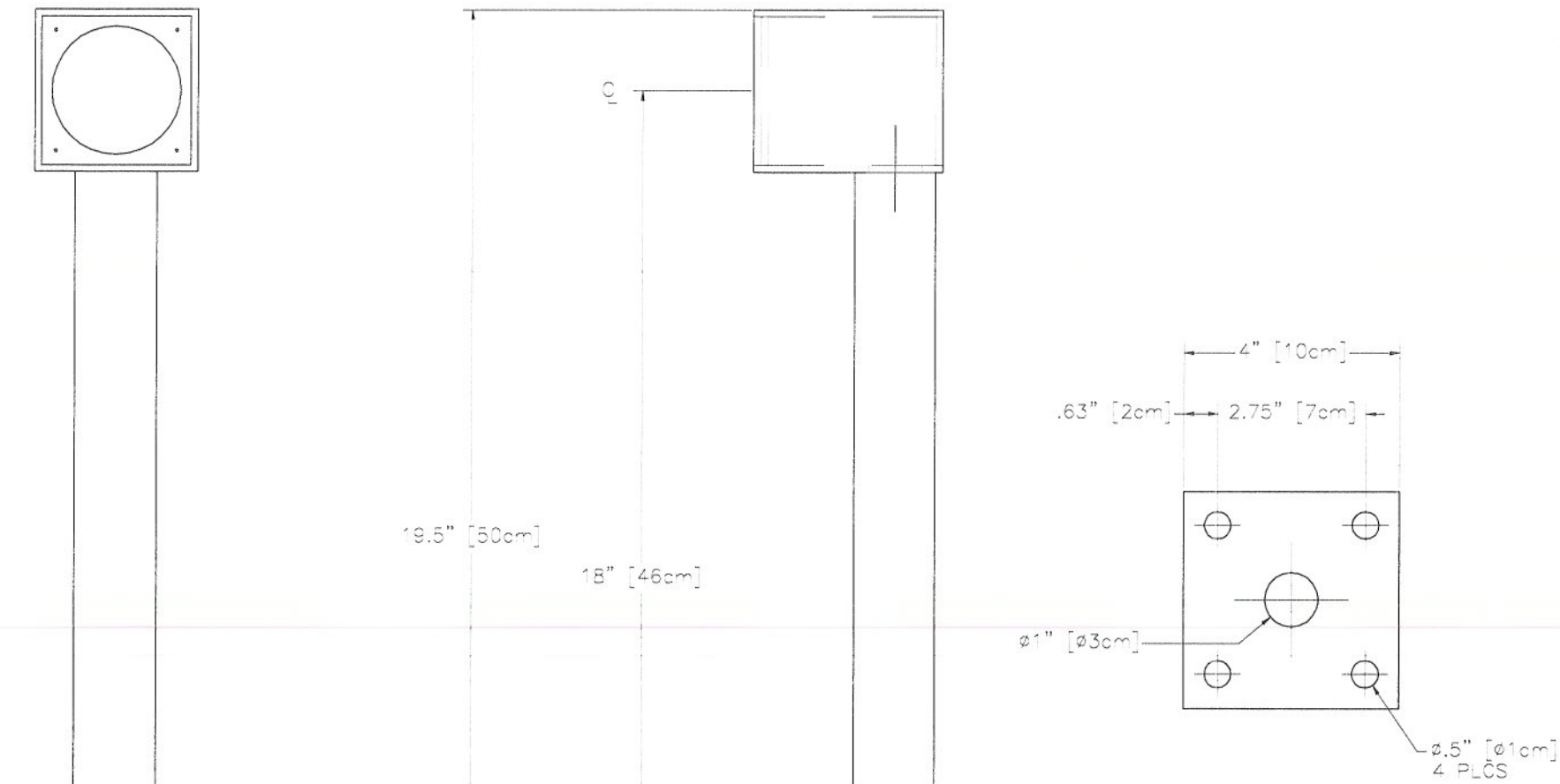

1. FINISH: ZINC PLATED

NOTES: UNLESS OTHERWISE SPECIFIED

THIS DRAWING HAS BEEN OTHERWISE NOTED. WHICH WAS CONFIDENTIAL PROPERTY AND TRADE SECRET OF DELTA SCIENTIFIC CORPORATION. IT SHALL NOT BE DISCLOSED, REPRODUCED OR USED FOR MANUFACTURE, DESIGN OR CONSTRUCTION WITHOUT THE EXPRESS AUTHORIZATION OF DELTA SCIENTIFIC CORPORATION. THE RECIPIENT IN ACCEPTING THIS DRAWING, HAS AGREED TO THEREOF AND AGREE THE HEAD TERMS HEREIN AND TO ALLOW USE OF BY UNAUTHORIZED PERSONS.	UNLESS OTHERWISE NOTED DIMENSIONS ARE IN INCHES TOLERANCES .X = ±.050/FT .XX = ±.030/FT .XXX = ±.010/FT ANGLES = ±.5° SURFACE FINISH 125	DELTA SCIENTIFIC CORPORATION 40355 DELTA LANE PALMDALE, CA 93551 U.S.A. (661) 575-1100 FAX (661) 575-1109 MODEL D-168-3 I-R SENSOR STAND 18" STANCHION HEIGHT
© 2000 ALL RIGHTS RESERVED	REMOVE ALL BURRS & BREAK SHARP EDGES .02 MAX	DRAWN BY J. FRIEND DATE 04/27/99 DRAWING NO. D-168-3 REV. –
		CHKD BY DATE
		APPD BY DATE SCALE 1:1 (D SIZE) SHEET 1 OF 1

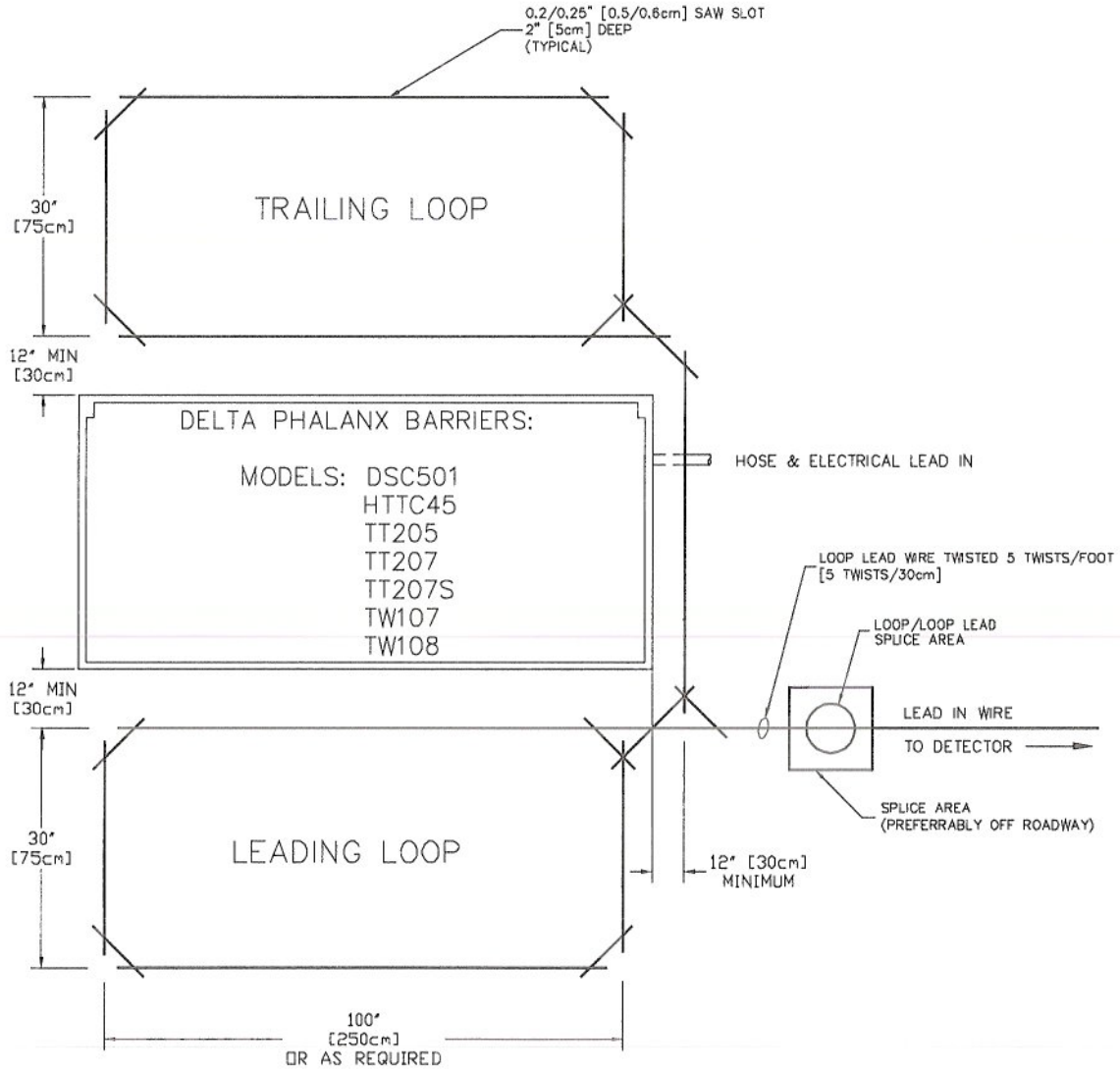

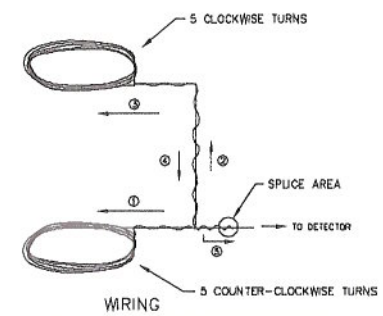

NOTES:

1) FOR LOOP INSTALLATION, REFER TO DSC LA2075.

2) PREFERRED LOOP MATERIAL IS 7 STRAND, #16 AWG COPPER W/0.045" CROSS LINKED POLYETHYLENE INSULATION.

ALTERNATE MATERIAL, #14 OR #16 AWG STRANDED COPPER, TYPE THHN OR BETTER INSULATION.

3) PREFERRED LOOP LEAD-IN CONDUCTOR IS 2 CONDUCTOR #16 AWG COPPER, 19-29 STRAND, TWISTED 5 TURNS PER FOOT, INNER INSULATION 20 MIL HI-DENSITY POLYETHYLENE, 1 MIL ALUMINUM SHIELD W/0.5 MIL POLYESTER FILM, #20 AWG TINNED COPPER DRAIN WIRE, OUTER JACKET 35 MIL HI-DENSITY POLYETHYLENE.

ALTERNATE LEAD-IN MATERIAL, #14 OR #16 AWG STRANDED COPPER PAIR, THHN OR BETTER INSULATION, TWISTED 5 TURNS PER FOOT MINIMUM.

4) LEAD-IN CONDUCTOR CAN BE RUN IN SAW CUT OR CONDUIT.

PHALANX™

REV.	DESCRIPTION	DRWN BY	DATE	APPVD BY	DATE
B	ECO #2004-259	JNF	11/22/04		
A	REVISED LOOP NOTES	JNF	01/23/02		

DELTA SCIENTIFIC CORPORATION
40355 DELTA LANE
PALMDALE, CA 93551 U.S.A.
(661) 575-1100 FAX (661) 575-1109

SUGGESTED SAFETY LOOP INSTALLATION - PHALANX BARRIERS

DRWN BY	DATE	DRAWING NO.	REV.
D.C.	01/23/02	90420	B
CHKD BY	DATE		
APPVD BY	DATE	SCALE: N.T.S.	SHEET 1 OF 1

© 2001 ALL RIGHTS RESERVED

3546-DCNP DETECTOR

NOTE: DETECTOR INTERNAL FUSE TERMINAL 1: 1/2 AMP

POWER SUPPLY
120/240 VAC TO 24 VDC
(SET SWITCH FOR CORRECT VOLTAGE)

0002-11 DETECTOR HARNESS

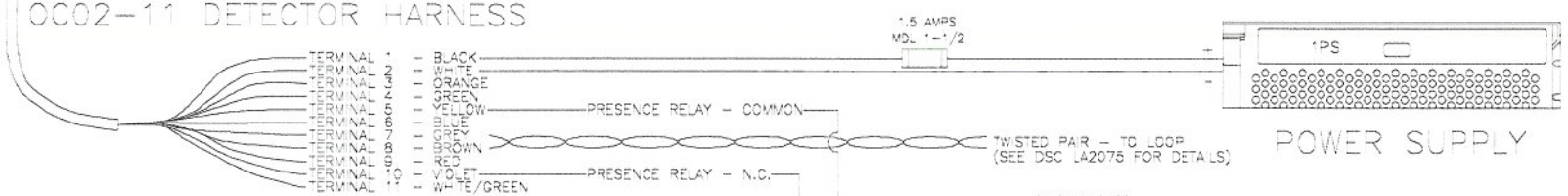

POWER SUPPLY

90605
MAIN BOARD

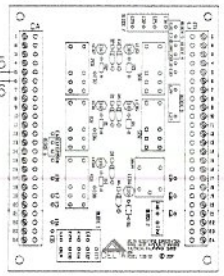

GATE ALTERNATE

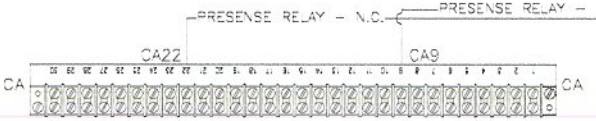

80600 & 80650
'CA' TERMINALS
(GATES ONLY)

(BOLLARDS & BARRIERS)

REV.	DESCRIPTION	DRWN BY	DATE	APPVD BY	DATE
B	ADDED 1PS POWER SUPPLY	JFW	11/11/02		

THIS DRAWING UNLESS OTHERWISE NOTED, REMAINS THE CONFIDENTIAL PROPERTY AND TRADE SECRET OF DELTA SCIENTIFIC CORPORATION. IT SHALL NOT BE DISCLOSED, REPRODUCED OR USED FOR MANUFACTURE, DESIGN OR CONSTRUCTION WITHOUT THE EXPRESS AUTHORIZATION OF DELTA SCIENTIFIC CORPORATION. THE RECIPIENT BY ACCEPTING THIS DRAWING, ASSUMES CUSTODY THEREOF AND UNDER THE ABOVE TERMS AGREES NOT TO ALLOW USE OF BY UNAUTHORIZED PERSONS

© 2002
ALL RIGHTS RESERVED

UNLESS OTHERWISE NOTED DIMENSIONS ARE IN INCHES

TOLERANCES
.X = ±.060/FT
.XX = ±.030/FT
.XXX = ±.010/FT
ANGLES = ±.5°

SURFACE FINISH
125

REMOVE ALL BURRS & BREAK SHARP EDGES .02 MAX

DELTA SCIENTIFIC CORPORATION
40355 DELTA LANE
PALMDALE, CA 93551 U.S.A.
(661) 575-1100 FAX (661) 575-1109

DIGITAL VEHICLE DETECTOR - 24 VDC SAFETY HOOKUP

DRWN BY	DATE	DRAWING NO.	REV.
J. WRIGHT	11/11/02	3546-DCNP	B
CHKD BY	DATE		
APPVD BY	DATE	SCALE: N.T.S.	SHEET 1 OF 1

© DELTA SCIENTIFIC CORPORATION

DELTA DIGITAL VEHICLE DETECTORS

DOCUMENT A2075

OPERATING INSTRUCTIONS – SERIES 3546

THIS DELTA DIGITAL VEHICLE DETECTOR, WHICH INCORPORATES AN ADVANCED MICRO CONTROLLER, COMBINES A POWERFUL DIGITAL COMPUTER AND THE LATEST AND MOST ADVANCED INDUCTIVE VEHICLE LOOP TECHNOLOGY TO GIVE THE TRAFFIC, PARKING OR SECURITY PROFESSIONAL THE FINEST IN RELIABILITY, FLEXIBILITY AND ACCURACY WHEN MEASURING, COUNTING OR DETECTING VEHICLES.

WARNING!!! THERE ARE MANY DIFFERENT WIRING CONFIGURATIONS. FAILURE TO MATCH THE CONNECTIONS OF MALFUNCTION OF THE DETECTOR SERIES AND THE HARNESS CAN RESULT IN MALFUNCTION OF THE DETECTOR AND SYSTEM.

Installation: Plug the detector into a harness or panel wired in accordance with the chart of connections listed on the detector label or in accordance with the chart of connections for the specific detector.

Apply power to the detector. The detector will tune and be operation immediately thereafter.

Field Selective Features: A detector can be configured to meet and satisfy a wide range of operating and interface situations. The following programming options are for all Delta detectors.

Multiple Loop Installations: (frequency settings) The detectors for adjacent loops should be set at different frequencies in installations where several loops of the same approximate size and number of turns are operated in close proximity. This will eliminate or greatly reduce the possibility of cross talk between the detectors. A high, low or medium frequency range is selected by the three-position toggle switch.

Sensitivity: The sensitivity is factory set at level 5 and in most installations will not have to be changed. Sensitivity can be increased or decreased by means of a 10 position rotary switch located on the PCB of the detector. Level '9' is the highest sensitivity and level '0' the lowest (factory setting level '5').

Automatic Profile Tracking: (Standard on Delta detectors) With profile tracking, the detector automatically tracks the profile of high bed vehicles and adjusts its sensitivity so that it will hold the vehicle as long as it is over the loop, thus reducing the possibility that the detector will drop the "call" (no field adjustment needed).

Re Self-Tune Hold Time: (Ref. Dwg. 'A')
PROGRAMMING JUMPER #4 INSTALLED, HOLD TIME BEFORE RE-TUNE IS 2 HOURS.
PROGRAMMING JUMPER #4 REMOVED, HOLD TIME BEFORE RE-TUNE IS INFINITY.
(Time after self-tuning that the detector will wait after a steady call before re-tuning to the new condition.)

Fail Safe/ Fail Secure Options (Ref Dwg 'B')
PROGRAMMING JUMPER #3 INSTALLED, DETECTOR OUTPUTS ARE FAIL-SAFE.
PROGRAMMING JUMPER #3 REMOVED OR SEVERED, DETECTOR OUTPUTS ARE FAIL SECURE.

Loop Self Diagnostics (See Note No. 1) (Ref Dwg 'B')
WITH JUMPER IN POSITION AS SHOWN, SELF-DIAGNOSTICS ENABLED.
WITH JUMPER REMOVED OR SEVERED, SELF-DIAGNOSTICS DEACTIVATED.

Dual Relay Detectors: In addition to the above field programming features, dual relay detectors can be programmed as follows:

Pulse Relay-Pulse on Exit or Pulse on Entrance: (Ref Dwg 'B')
PROGRAMMING JUMPER #2 INSTALLED, PULSE OUTPUT ON ENTRY TO LOOP.
PROGRAMMING JUMPER #2 REMOVED, PULSE OUTPUT ON EXIT FROM LOOP.

Single Relay Detectors: In addition to the above field programming features, single relay detectors can be programmed as follows:

Pulse or Presence Output Options: (Ref Dwg 'A')
PROGRAMMING JUMPER #1 AND PROGRAMMING JUMPER #3 INSTALLED, RELAY OPERATES IN PRESENCE MODE.
PROGRAMMING JUMPER #1 REMOVED, RELAY OPERATES IN PULSE MODE.

Pulse on Entrance or Pulse on Exit: (Ref Dwg 'A')
WHEN OPERATED IN THE PULSE MODE WITH PROGRAMMING JUMPER #2 AND PROGRAMMING JUMPER #3 INSTALLED, PULSE OUTPUT ON ENTRANCE TO LOOP.
PROGRAMMING JUMPER #2 REMOVED, PULSE OUTPUT ON EXIT FROM LOOP.

Note No. 1: When this feature is enabled and the detector is powered up, the LED lights momentarily while the detector self-tunes. After tuning, the LED will light when the detector signals a "call".

If the LED commences a repeated series of flashes, this indicates that the loop is probably shorted (series of flashes followed by a pause) or the loop is open (steady series of flashes). If the problem is intermittent and self heals, the detector will resume normal operations. However, the fault signal will continue until the detector is reset by either the front panel reset button or by turning off the power momentarily. When the self-diagnostics is deactivated the detector is powered up; the LED lights momentarily while the detector self tunes. After tuning, the LED will light when the detector signals a "call".

Note No. 2: The detector can be reset by pressing the red button on the detector case or by momentarily tuning the power off and then back on.

40355 Delta Lane – Palmdale, California, 93551, USA – Phone: (661) 575-1100 – Fax: (661) 575-1109

DELTA DIGITAL VEHICLE DETECTORS
OPERATING INSTRUCTIONS – SERIES 3546

DOCUMENT A2075

Loop Layouts and Configuration:

DELTA detectors will tune and operate successfully with loops in a wide range of shapes and sizes such as squares, rectangles, circular, quadruple and diamond shape, etc.

The following chart is a guide to the number of turns to use when installing standard square, rectangular or diamond shape loops.

Compute the area of the proposed loop in square feet (square meters) and then using the chart, lookup the appropriate number of turns.

Area Square Ft	Square Meters	Turns
5-14	(,46-1,3)	6
15-20	(1,-1,9)	5
20-64	(1,9-6.0)	4
65-250	(6,0-23.2)	3
Over 250	(23,2)	2

When the lead-in distance from loop to detector exceeds 490 feet (125m) it is recommended that an additional turn be added to the loop.

When winding the loop, care should be exercised that the wire insulation is protected from scuffing or cuts while being inserted into the saw slot. Where possible avoid sharp comers by saw cutting small diagonals at each corner of the loop. A standard stranded cooper wire with good all condition insulation should be used (#12 to #16 AWG).

The lead-in from the loop to the detector should be twisted (4 twist per foot medium) and shielded if available. The shield should be properly grounded and weather protected at the junction box.

Good low resistance electrical connections at all junction points of the loop are important. Where possible connections or splices should be soldered or bonded together by means of positive flow crimp type connectors (no wire nuts). Physical protection of the connection points against corrosion or contamination also contributes to long term operation.

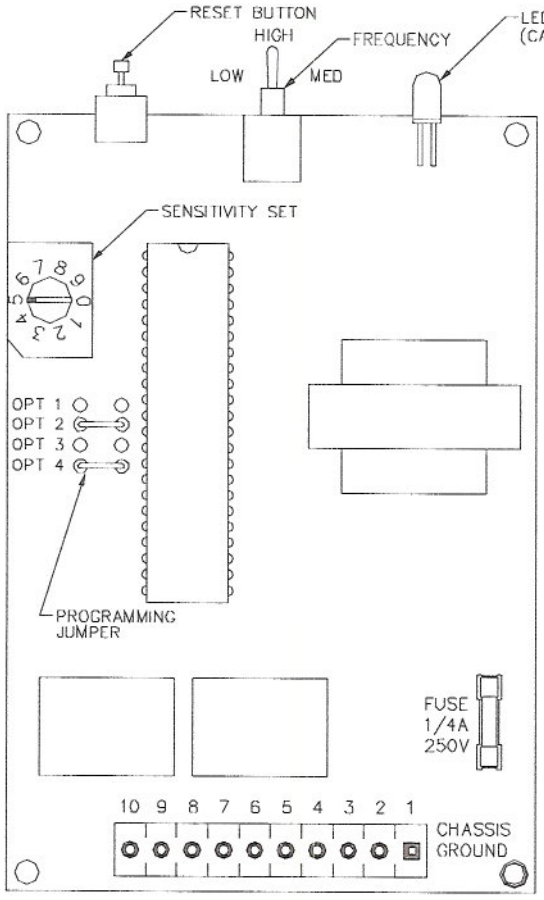

POPULATED SIDE
"A"

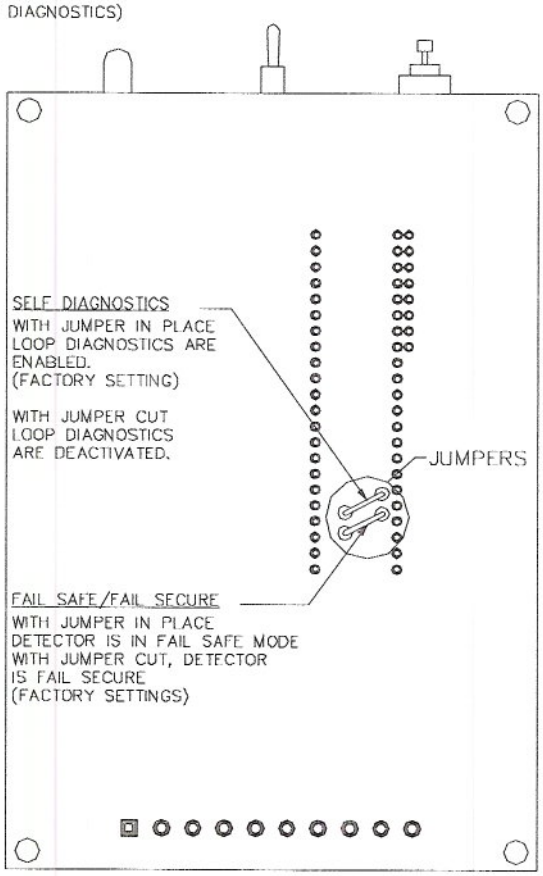

BACK SIDE
"B"

40355 Delta Lane – Palmdale, California, 93551, USA – Phone: (661) 575-1100 – Fax: (661) 575-1109

DELTA
SCIENTIFIC CORPORATION

LOOP APPLICATION NOTES
VEHICLE DETECTOR LOOP INSTALLATION GUIDE

INTRODUCTION:

This loop application note is intended to illustrate the steps involved in installing a "saw cut type" vehicle detector loop. The loop sizes and configurations vary according to the detector requirement being accommodated. Long-length or multiple loops may be required in conjunction with traffic signals where the important factor is to know if there is at least one vehicle in a large zone of detection such as a left-turn lane. The smaller loop size (such as 18 inch by 54 inch) is used where it is important to have a separate detection output for each vehicle in a slow-moving stream of heavy traffic, such as a parking gate.

General Notes:

- We recommend using a 12 to 16 gauge THHN or better stranded wire.
- Backer rod is not commonly used anymore, but may be used if available.
- Wire loop and twisted lead-in wire should be one (1) piece. It is best to **not** splice the loop and lead wires.
- Solder all wire connections at the connector (harness) of the loop detector. Do **not** use wire nuts to make connection.
- Asphalt patching compound can be substituted for epoxy, and is typically supplied in caulking gun tubes.

Copyright 2003 Delta Scientific Corporation
All Rights Reserved

INSTALLATION INSTRUCTIONS:

1) Mark the loop outline on the pavement surface using either a string or rigid frame and aerosol spray paint as shown in Figures 1 & 2. Note that corners are to be either diagonally cut (Method "A") or core drilled (Method "B") to prevent damage to wire insulation during placement of wire in the slot. (See Photo 1 and Illustration 1).

2) Place a mark on the concrete saw blade to insure the saw cut depth is 2 inches [50 mm] deep (see Figure 4). The saw blade should be ¼ inch [6 mm] wide.

3) Saw loop outline in pavement as shown in Photo 2.

Photo 1

Mark the loop outline on the pavement surface using a snap line chalk or other marking techniques.

Copyright 2003 Delta Scientific Corporation
All Rights Reserved

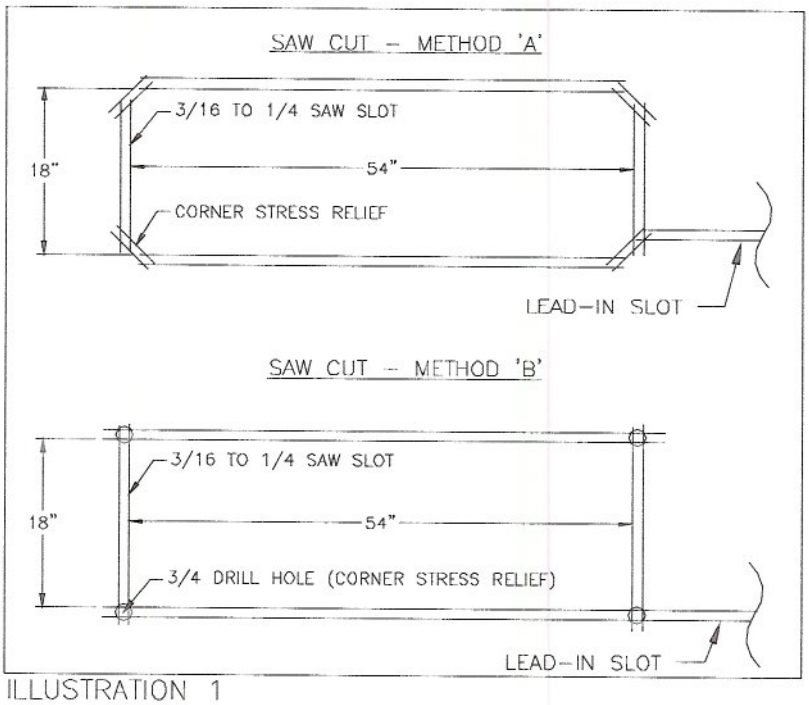

ILLUSTRATION 1

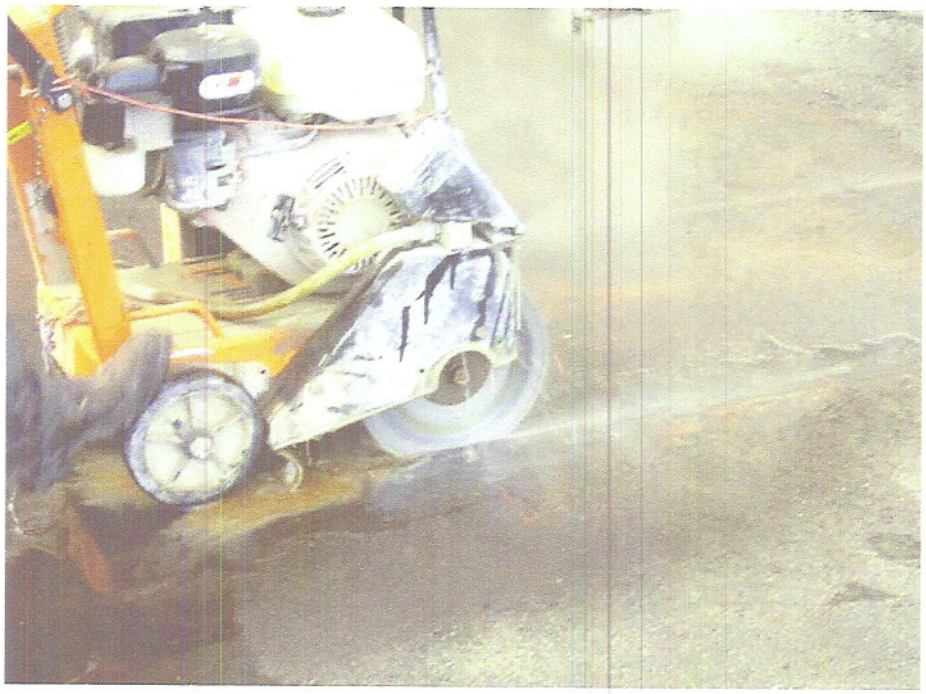

Photo 2

Sawing the Loop with concrete saw

Copyright 2003 Delta Scientific Corporation
All Rights Reserved

4) Clean debris from slot with water or compressed air and allow surface to completely dry (See Photo 3).

Photo 3

Loop is sawn, debris removed from the saw slot and ready to dry

5) After the loop size has been determined, refer to Illustration 2 to determine the number of turns of loop wire to be placed in the loop slot. It is important that the proper number of turns is used. Wire should be minimum 16 gauge in size and should be stranded type.

NOTE: NO WIRE SPLICES ARE PERMITTED IN THE SAW SLOT!!!

Copyright 2003 Delta Scientific Corporation
All Rights Reserved

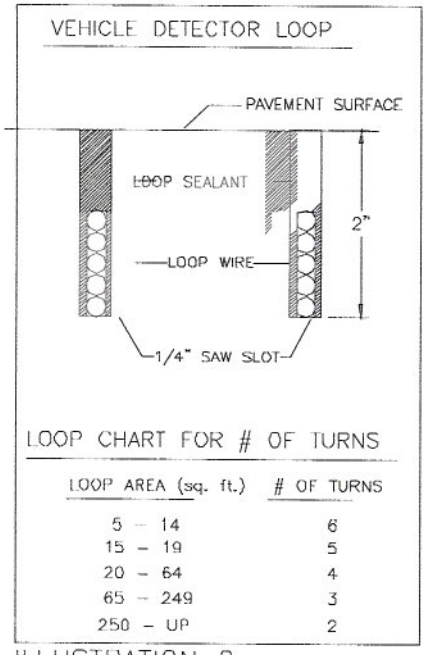

ILLUSTRATION 2

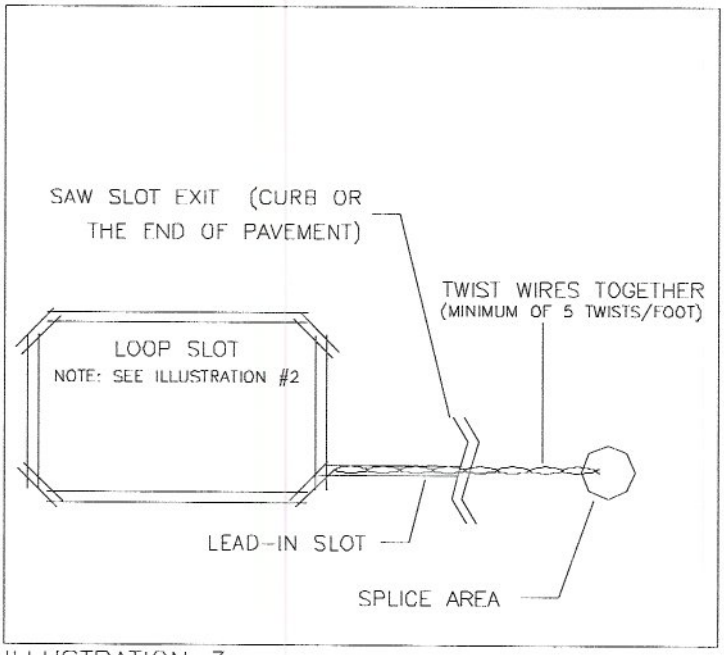

ILLUSTRATION 3

6) Calculate the total footage of wire needed to accommodate both the proper number of turns around the loop **PLUS SUFFICIENT FOOTAGE TO PROVIDE BOTH LEADS INTO THE LOOP FROM THE LOOP DETECTOR HARNESS.** Leaving enough wire at the proposed location of the Detector Harness, carefully start to install the wire in the loop slot (see Photo 4) and then make the proper number of turns around the loop. When the loop is complete begin twisting the loop leads together a minimum of 5 turns per foot (a drill motor is handy for doing this). Continue twisting these wires together all the way to the connection point with the Detector harness. All caution must be used when installing wire not to cut or nick the wire insulation while placing it in the ground.

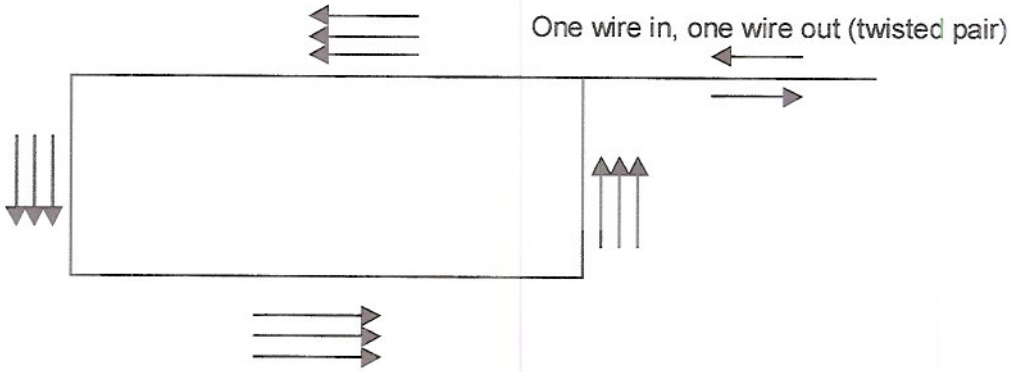

Typical turn pattern

Copyright 2003 Delta Scientific Corporation
All Rights Reserved