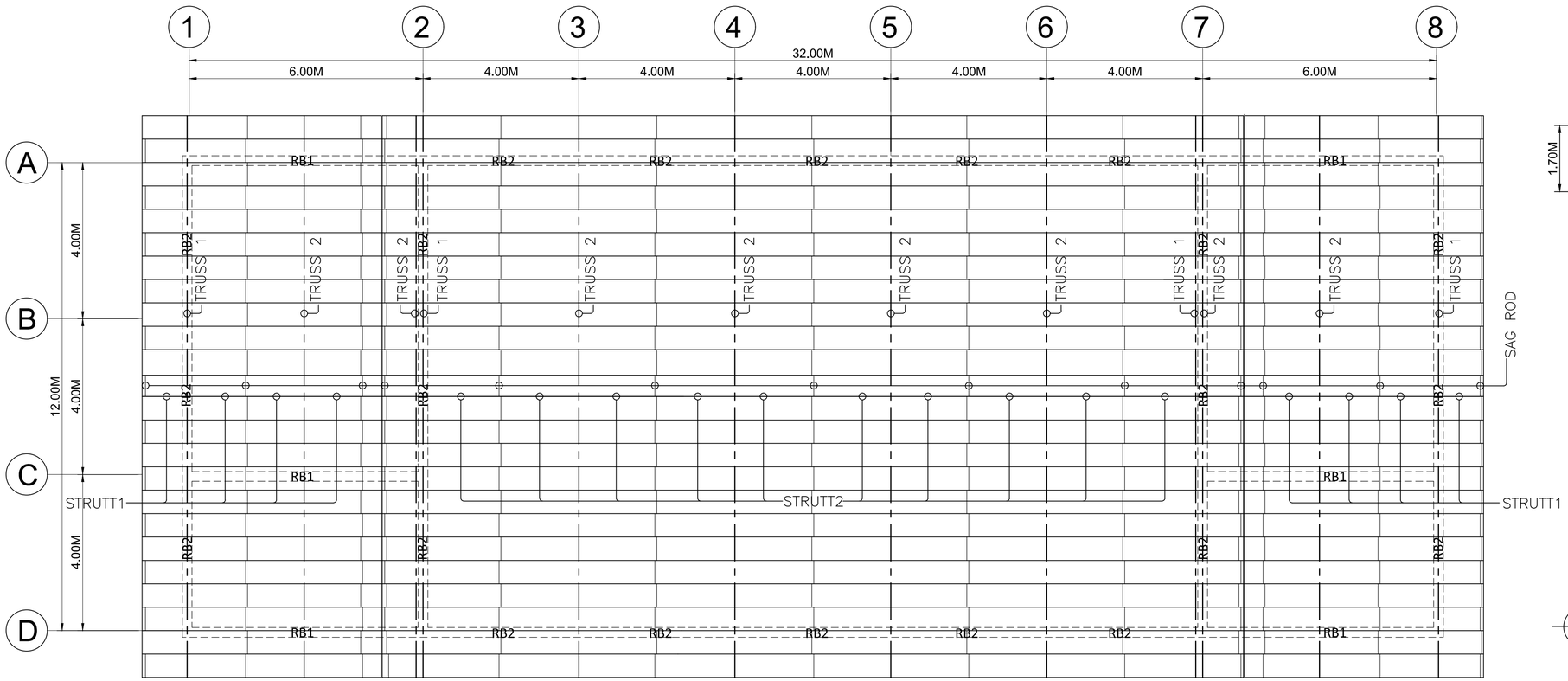


## ROOF FRAMING P L A N

SCALE 1: 75 METERS

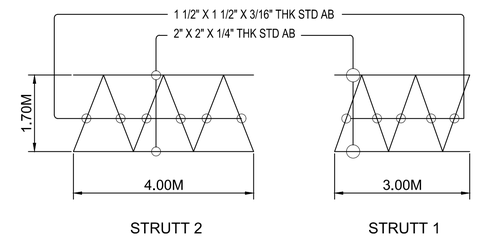


## STRUTT DETAIL

SCALE 1: 75 METERS

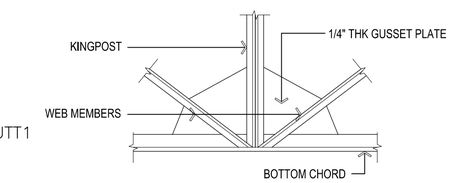


## DETAIL "J"

TRUSS BOTTOM CHORD @MIDSPAN

SCALE 1: 10 METERS

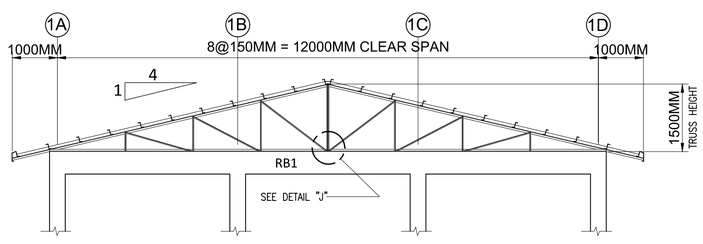


BOTTOM CHORD 2 < 2" X 2" X 1/4" THK STD AB
TOP CHORD 2 < 2" X 2" X 1/4" THK STD AB
WEB MEMBERS 2 < 1 1/2" X 1 1/2" X 3/16" THK STD AB
GUSSET PLATE 1/4" THK

## TRUSS 1 DETAIL

SCALE 1: 75 METERS

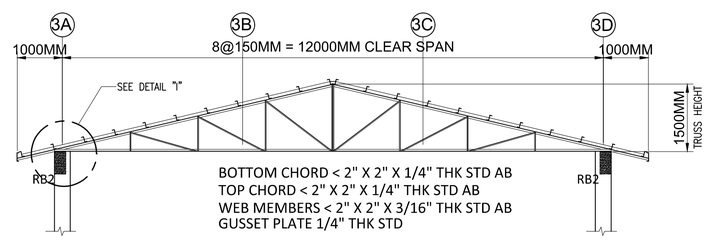


BOTTOM CHORD < 2" X 2" X 1/4" THK STD AB
TOP CHORD < 2" X 2" X 1/4" THK STD AB
WEB MEMBERS < 2" X 2" X 3/16" THK STD AB
GUSSET PLATE 1/4" THK STD

## TRUSS 2 DETAIL

SCALE 1: 75 METERS

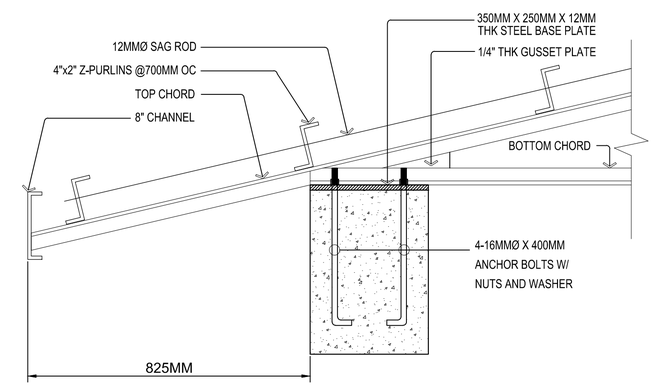


## DETAIL "I"

ROOF BEAM TO TRUSS CONN

SCALE 1: 10 METERS

| PROJECT TITLE : | PREPARED BY: | CHECKED BY: | SUBMITTED BY: | RECOMMEND APPROVAL: | APPROVED BY: | SHEET NO. |
|---|---|---|---|---|---|---|
| PROPOSED PNP SAF CLASSROOMS | ENGR FRENEL B BAUTISTA<br>PCINSP<br>CHIEF, PLANS & DESIGN SECTION | ARCH PAVEL D HALOG<br>PSUPT<br>CHIEF, CONSTRUCTION & REPAIR DIVISION | JOEL FELIX MATEO D RUNES IV, MPA<br>PSSUPT ( CE ) DSC<br>CDS, ENGINEERING SERVICE | JEROME P PAGARAGAN, CEO VI<br>PSSUPT<br>DEPUTY DIRECTOR, ENGINEERING SERVICE | CRISTINO C CAMPANILLA, CESE<br>PCSUPT<br>DIRECTOR, ENGINEERING SERVICE | S-6 |
| LOCATION: FORT STO DOMINGO, STA ROSA, LAGUNA | | | | | | JUNE 22, 2012<br>DATE DRAWING COMPLETED |