ROOM FINISH SCHEDULE

RM NR	ROOM NAME	FLOOR FINISH	WALL FINISH	BASE FINISH	COLUMN & BEAM FINISH	CEILING FINISH
1 & 2	CLASSROOM (25 STUDENTS CAPACITY)	300MM X 300MM UNGLAZED GRANITE FLOOR TILES	SEMI-GLOSS PAINT FINISH (EXTERIOR-WHITE, INTERIOR-IVORY/WHITE)	6" HIGH VINYL BASE	GLOSSY PAINT FINISH (PNP BLUE)	600MM x 1200MM PANELS SUSPENDED TILE CEILING
3	AUDITORIUM TYPE CLASSROOM (100 STUDENTS CAPACITY)	PLAIN CONCRETE FLOOR FINISH	SAME	6" HIGH VINYL BASE	SAME	NONE (EXPOSED ROOFING ASSEMBLY W/ INSULATION PAINTED DARK GRAY)
4 & 5	ENTRY/EXIT PORCH	PLAIN CONCRETE FLOOR FINISH	SAME	GLOSSY PAINT FINISH (GRAY) 6" HIGH ABV FIN FLR LN	SAME	METAL SPANDREL CEILING W/ AIR INTAKE LOUVERS

WINDOW SCHEDULE

DIMENSIONS (INCH)	WINDOW NR	WINDOW TYPE	QUANTITY	LOCATIONS
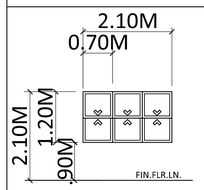	W1	DOUBLE HUNG CLEAR GLASS WINDOW	15 UNITS REQUIRED	CLASSROOM - 1 CLASSROOM - 2
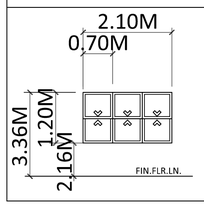	W1	DOUBLE HUNG CLEAR GLASS WINDOW	7 UNITS REQUIRED	AUDITORIUM-TYPE CLASSROOM

DOOR SCHEDULE

DIMENSIONS (INCH)	DOOR NR	DOOR TYPE	FRAME TYPE	HANDLING (LH / RH)	GLAZING	LOCKSET TYPE	ACCESSORIES / COMMENTS
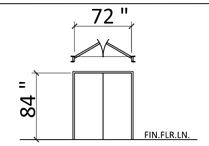	D1	STEEL DOUBLE DOOR	STEEL FRAME	RIGHT & LEFT HAND/ SWING	NARROW LITE	LEVER TYPE CLASSROOM FUNCTION	PLUNGER BOLTS ON TOP & BOTTOM
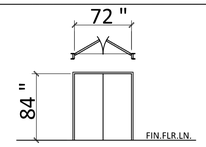	D2	STEEL DOUBLE DOOR	SAME	RIGHT & LEFT HAND/ SWING	SAME	SAME	PLUNGER BOLTS ON TOP & BOTTOM
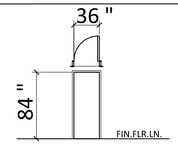	D3	STEEL DOOR	SAME	RIGHT HAND / SWING	SAME	SAME	
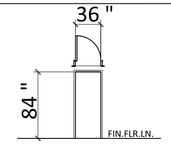	D4	STEEL DOOR	SAME	LEFT HAND / SWING	SAME	SAME	

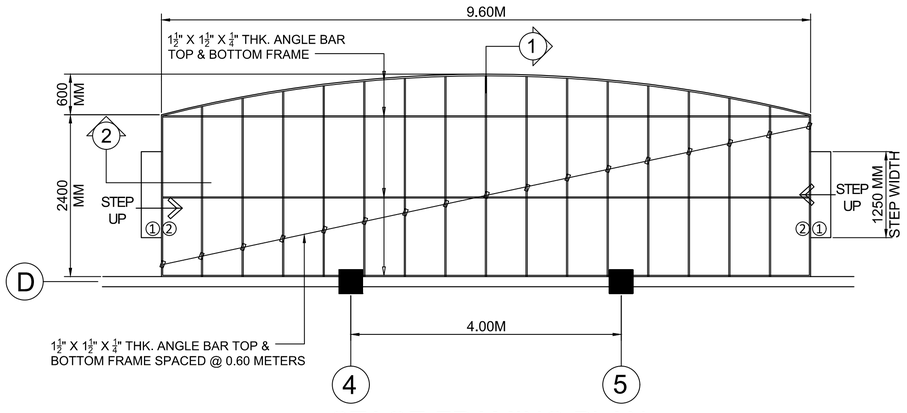

STAGE FRAMING PLAN
SCALE 1 : 50 METERS

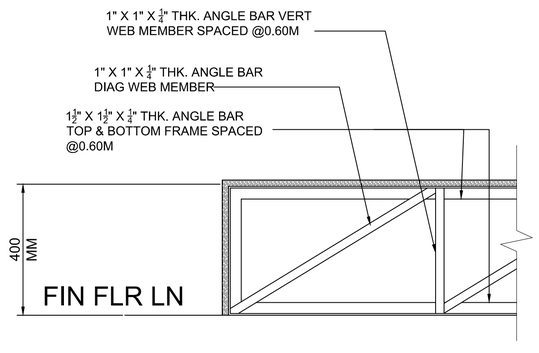

DETAIL "1"
STAGE DETAIL SECTION
SCALE 1 : 10 METERS

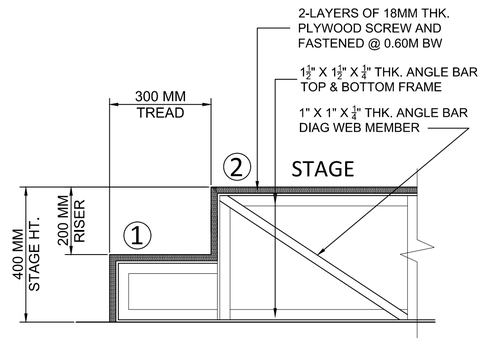

DETAIL "2"
STAGE DETAIL SECTION
SCALE 1 : 10 METERS

PROJECT TITLE :	PREPARED BY:	CHECKED BY:	SUBMITTED BY:	RECOMMEND APPROVAL:	APPROVED BY:	SHEET NO.
PROPOSED PNP SAF CLASSROOMS	ENGR FRENEL B BAUTISTA PCINSP CHIEF, PLANS & DESIGN SECTION	ARCH PAVEL D HALOG PSUPT CHIEF, CONSTRUCTION & REPAIR DIVISION	JOEL FELIX MATEO D RUNES IV, MPA PSSUPT (CE) DSC CDS, ENGINEERING SERVICE	JEROME P PAGARAGAN, CEO VI PSSUPT DEPUTY DIRECTOR, ENGINEERING SERVICE	CRISTINO C CAMPANILLA, CESE PCSUPT DIRECTOR, ENGINEERING SERVICE	A-7
LOCATION: FORT STO DOMINGO, STA ROSA, LAGUNA						JUNE 22, 2012 DATE DRAWING COMPLETED