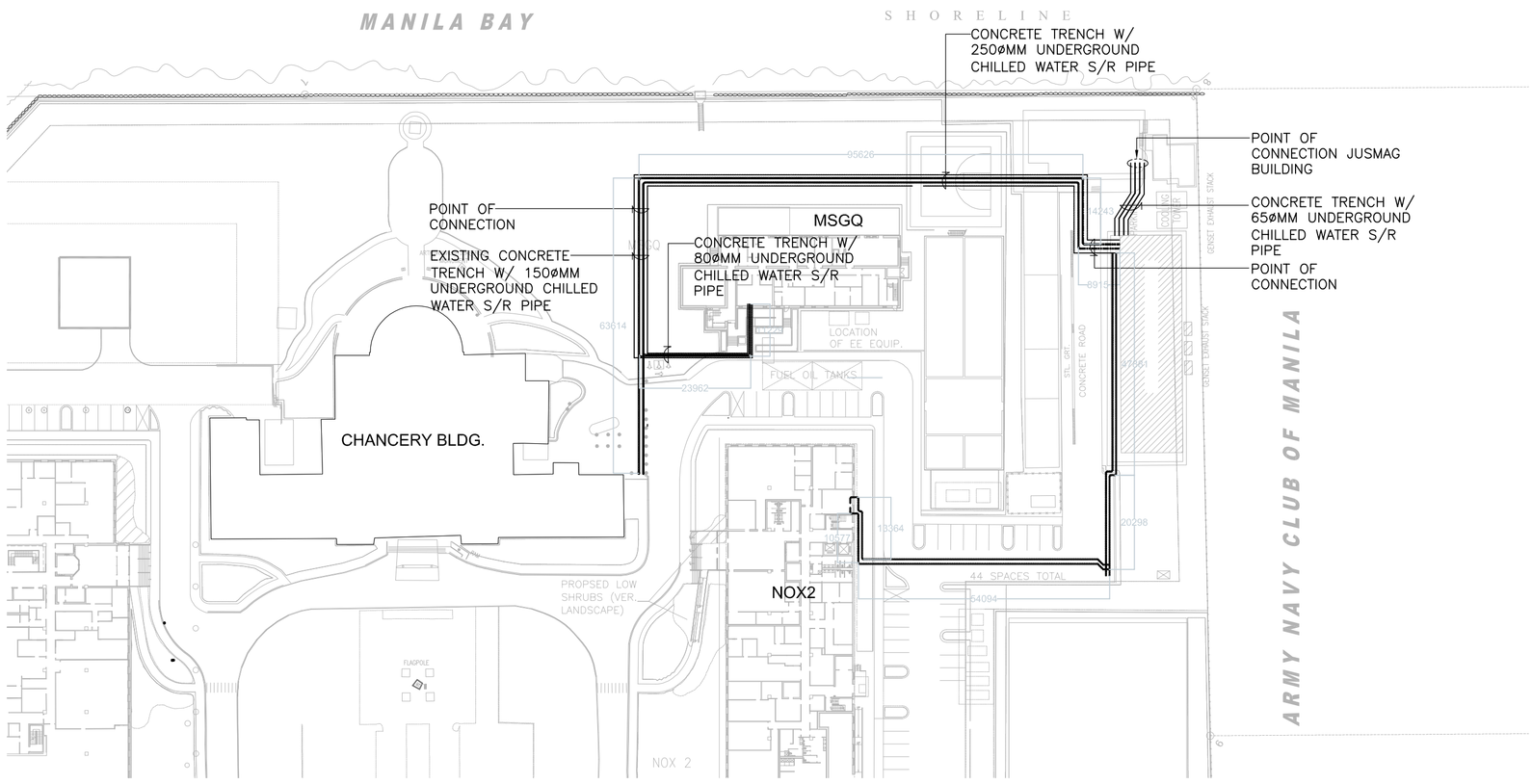

1
M2-02

EXTERNAL CHILLED WATER PIPING LAYOUT (DRAWING ISSUED BY FMO)

NTS

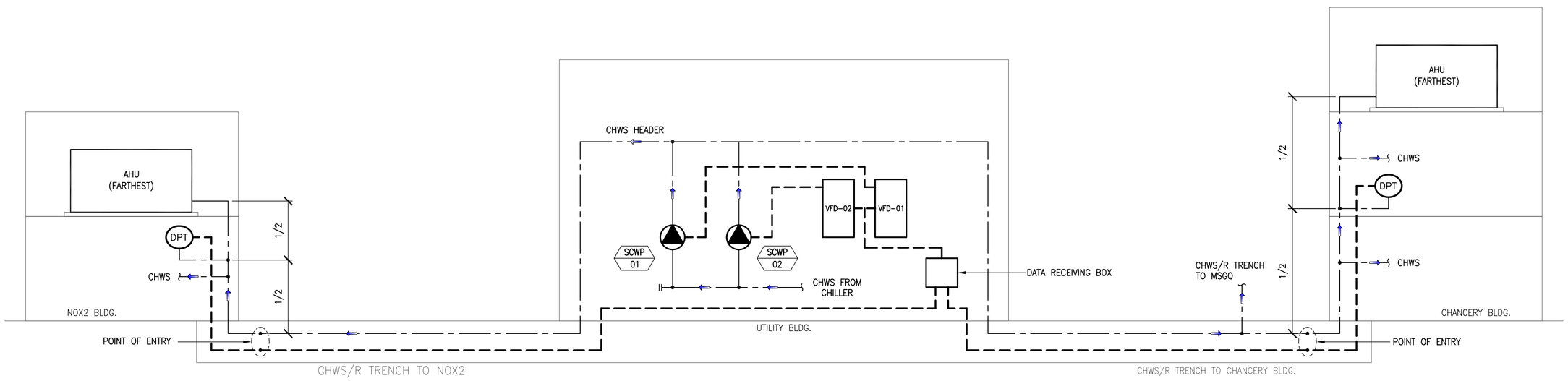

2
M2-02

INSTALLATION OF DIFFERENTIAL PRESSURE TRANSMITTER (DPT) SCHEMATIC DIAGRAM

NTS

UNITED STATES EMBASSY
MANILA, PHILIPPINES

FACILITIES MANAGEMENT

WARNING:
This document is the property of the U.S. Government. Further reproduction and/or distribution is prohibited without the express written permission of:
FOREIGN BUILDING OPERATIONS
U.S. Department of State, Washington, DC, 20522-0620
Information on this document is not to be altered except with the written approval of the Individual whose seal appears hereon.

Engineer
MEINHARDT
25th Floor Chatham House 116 Valero cor.
V.A. Rufino St. Salcedo Village, Makati City
Tels. (632) 887-1391 E-mail mpi@meinhardt.com.ph
Fax (632) 887-1172

OSCAR V. RELUCIO
PROFESSIONAL MECHANICAL ENGINEER

PRC Reg. No: 2886 | PTR No: 3178285
Date: JANUARY 04, 2012 | Place: MAKATI CITY

APPROVED BY :

DISCIPLINE	INITIAL	SIGNATURE	DATE
CFM	PLS		
DFM	RLW		
CHIEF ENG'R	BEE		
ARCH'L	AGM		
CIVIL/STRL	ADM		
ELECT'L	MTF		
MECH'L	BTD		
F & S	MTI		

RevNo	Revision note	Date	Sign.

Project Title

US EMBASSY MAIN CHILLER PLANT ADDITION

Location

ROXAS BOULEVARD, PHILIPPINES

Release For Construction:
FMM | FMS

SHEET CONTENT

MECHANICAL SERVICES
EXTERNAL CHILLED WATER PIPING LAYOUT & DIFFERENTIAL PRESSURE TRANSMITTER SCHEMATIC DIAGRAM

Phase
☐ CONCEPT ☐ 35% ☐ 60% ■ 90% ☐ 100% ☐ FINAL

Date: 09SEP12	CADD File Name:
Designed: ESL	Drawn By: CTF
Checked: JCC/OVR	Drawing Number: M2-02
Project Number: MP1044	Sheet Number: Sheet 5 of 7

Contract No.
-