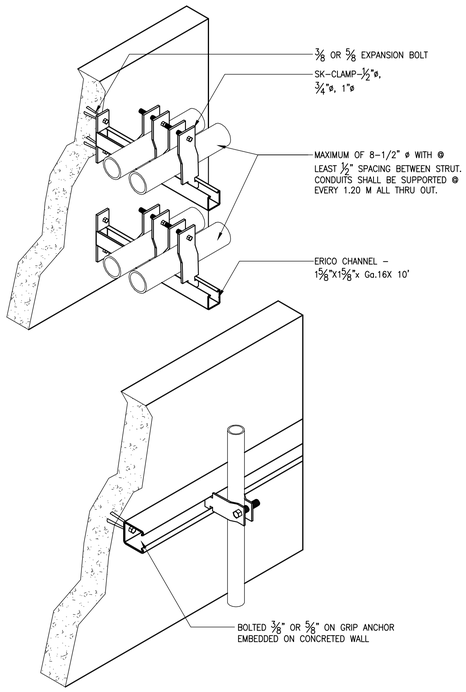

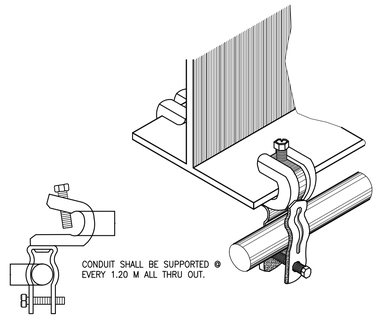

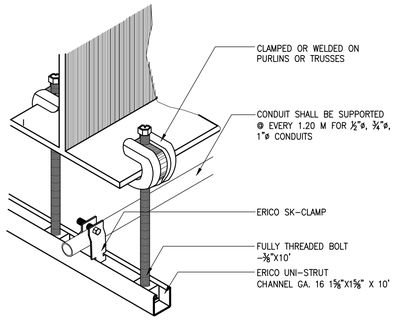

1 / E3-01 CONDUIT SUPPORT DETAILS

NTS

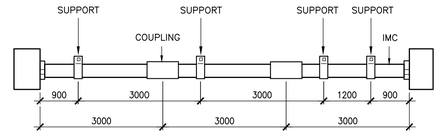

MINIMUM SUPPORT REQUIRED FOR IMC

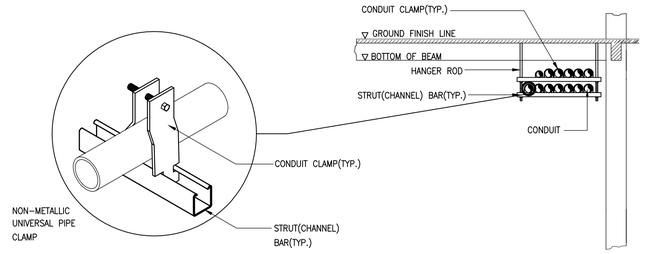

CONDUIT HANGER DETAIL

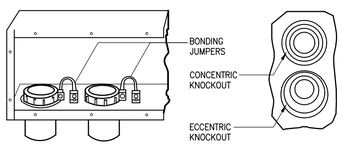

BONDING JUMPERS

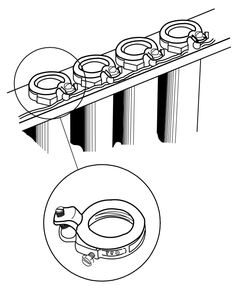

THREADED GROUNDING BUSHING MOUNTING DETAIL

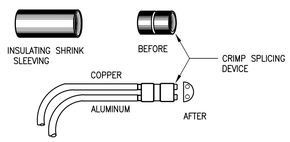

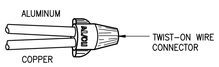

PIGTAILING COPPER

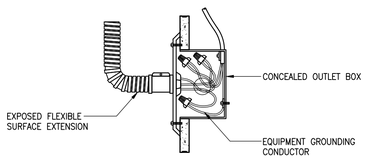

FLEXTURE SURFACE EXTENSION

2 / E3-01 GROUNDING DETAILS

NTS

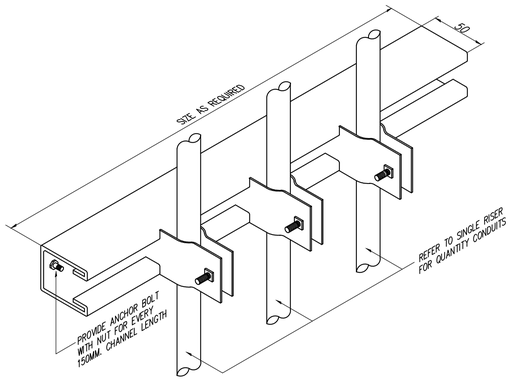

3 / E3-01 CONDUIT RISER DETAIL

NTS

UNITED STATES EMBASSY
MANILA, PHILIPPINES

FACILITIES MANAGEMENT

WARNING:
This document is the property of the U.S. Government. Further reproduction and/or distribution is prohibited without the express written permission of:
FOREIGN BUILDING OPERATIONS
U.S. Department of State, Washington, DC, 20522-0620
Information on this document is not to be altered except with the written approval of the individual whose seal appears hereon.

SENSITIVE BUT UNCLASSIFIED

Engineer
MEINHARDT
25th Floor Chatham House 116 Valero cor. V.A. Rufino St. Salcedo Village, Makati City
Tels. (632) 887-1391 E-mail mpi@meinhardt.com.ph
Fax (632) 887-1172

ALFREDO G. RODRIGUEZ
PROFESSIONAL ELECTRICAL ENGINEER

PRC Reg. No: 2633 PTR No: 3178287

Date: JANUARY 04, 2012 Place: MAKATI CITY

APPROVED BY :

DISCIPLINE	INITIAL	SIGNATURE	DATE
SFM	PLS		
DFM	RLW		
CIVIL/STRL			
ELECT'L			
MECH'L			

RevNo	Revision note	Date	Sign.

Project Title

US EMBASSY MAIN CHILLER PLANT ADDITION

Location

ROXAS BOULEVARD, PHILIPPINES

Release For Construction:

FMM FMS

SHEET CONTENT

ELECTRICAL SERVICES MISCELLANEOUS DETAILS 1

Phase

☐ CONCEPT ☐ 35% ☐ 60% ☐ 90% ■ 100% ☐ FINAL

Date 29OCT12	CADD File Name
Designed JSS	Drawn By JMM
Checked AGR	Drawing Number E3-01
Project Number MP1044	Sheet Number Sheet 4 of 5

Contract No. -