AMENDMENT OF SOLICITATION/MODIFICATION OF CONTRACT

1. CONTRACT ID CODE	PAGE OF PAGES
	1 / 5

2. AMENDMENT/MODIFICATION NO.	3. EFFECTIVE DATE	4. REQUISITION/PURCHASE REQ. NO.	5. PROJECT NO. *(If applicable)*
A-001	9/23/2014	PR3697304	

6. ISSUED BY CODE
Contracting & Procurement
General Services Office, American Embassy Manila
Seafront Compound, Roxas Boulevard, Pasay City

7. ADMINISTERED BY *(If other than Item 6)* CODE

8. NAME AND ADDRESS OF CONTRACTOR *(No., street, county, State, and ZIP Code)*

FACILITY CODE

(√)	
	9A. AMENDMENT OF SOLICITATION NO. SRP380-14-Q-0114
X	9B. DATED *(SEE ITEM 11)* 09/29/2014
	10A. MODIFICATION OF CONTRACT/ORDER NO.
	10B. DATED *(SEE ITEM 13)*

11. THIS ITEM ONLY APPLIES TO AMENDMENTS OF SOLICITATIONS

[X] The above numbered solicitation is amended as set forth in Item 14. The hour and date specified for receipt of Offers [ ] --Is extended, [X] is not extended.

Offers must acknowledge receipt of this amendment prior to the hour and date specified in the solicitation or as amended, by one of the following methods:

(a) By completing Items 8 and 15, and returning 1 copies of the amendment; (b) By acknowledging receipt of this amendment on each copy of the offer submitted; of (c) By separate letter of telegram which includes a reference to the solicitation and amendment numbers. FAILURE OF YOUR ACKNOWLEDGEMENT TO BE RECEIVED AT THE PLACE DESIGNATED FOR THE RECEIPT OF OFFERS PRIOR TO THE HOUR AND DATE SPECIFIED MAY RESULT IN REJECTION OF YOUR OFFER. If by virtue of this amendment you desire to change an offer already submitted, such change may be made by telegram or letter, provided each telegram or letter makes reference to the solicitation and this amendment, and is received prior to the opening hour and date specified.

12. ACCOUNTING AND APPROPRIATION DATA *(If required)*

13. THIS ITEM APPLIES ONLY TO MODIFICATIONS OF CONTRACTS/ORDERS, IT MODIFIES THE CONTRACT/ORDER NO. AS DESCRIBED IN ITEM 14.

(√)		
	A.	THIS CHANGE ORDER IS ISSUED PURSUANT TO: *(Specify authority)* THE CHANGES SET FORTH IN ITEM 14 ARE MADE IN THE CONTRACT ORDER NO. IN ITEM 10A.
	B.	THE ABOVE NUMBERED CONTRACT/ORDER IS MODIFIED TO REFLECT THE ADMINISTRATIVE CHANGES *(such as changes in paying office, appropriation date, etc.)* SET FORTH IN ITEM 14, PURSUANT TO THE AUTHORITY OF FAR 43.103(b)
	C.	THIS SUPPLEMENTAL AGREEMENT IS ENTERED INTO PURSUANT TO AUTHORITY OF:
	D.	OTHER *(Specify type of modification and authority)*

E. IMPORTANT: Contractor [X] is not, [ ] is required to sign this document and return ___ copy to the issuing office.

14. DECRIPTION OF AMENDMENT/MODIFICATION *(Organized by UCF section headings, including solicitation/contract subject matter where feasible.)*

SRP380-14-Q-0114 is being amended as follows:

1. To reflect changes on the Scope of Work.

A. *Specific Task C.10.1*

The contractor guarantees to complete the work within Fifteen (15) working days from the date of Notice to Proceed. ***Delivery of equipment is within 12-14 weeks upon receipt of the Purchase Order.***

15A. NAME AND TITLE OF SIGNER *(Type of print)*		16A. NAME AND TITLE OF CONTRACTING OFFICER *(Type or Print)* JOHN KLIMOWSKI	
15B. CONTRACT/OFFEROR *(Signature of person authorized to sign)*	15C. DATE SIGNED	16B. UNITED STATES OF AMERICA *(Signature of Contracting Officer)*	16C. DATE SIGNED 9/23/14

2. Attached are the answers to the questions raised by the offerors after the pre-proposal conference.

3. All other terms and conditions remain unchanged and in full force and effect.

TABLE OF CONTENTS

SF 18

A. Price
B. Scope of Work
C. Packaging and Marking
D. Inspection and Acceptance
E. Deliveries/Performance
F. Administrative Data
G. Special Requirements
H. Clauses
I. List of Attachments
J. Quotation Information
K. Evaluation Criteria
L. Representations, Certifications, and other Statements of Offerors or Quoters

Attachments

Attachment 1: Specifications/Scope of Work
Attachment 2: RSO Biographic Data
Attachment 3: Holiday Schedule
Attachment 4: Drawing

A. PRICE

The Contractor shall complete all work, including furnishing all labor, material, equipment and services required under this purchase order for the following firm fixed price and within the time specified. This price shall include all labor, materials, all insurances, overhead and profit.

_____ Total Price

A.1 VALUE ADDED TAX

The Government will not reimburse the Contractor for VAT under this contract. The Contractor shall not include a line for VAT on Invoices as the U.S. Embassy has a tax exemption certificate with the host government.

B. SCOPE OF WORK

The character and scope of the work are set forth in the contract. The Contractor shall furnish and install all materials required by this contract.

In case of differences between small and large-scale drawings, the latter will govern. Where a portion of the work is drawn in detail and the remainder of the work is indicated in outline, the parts drawn in detail shall apply also to all other portions of the work.

C. PACKAGING AND MARKING

Mark materials delivered to the site as follows:

AMERICAN EMBASSY
MANILA, PHILIPPINES
For: Contract No. (to be completed upon award)

D. INSPECTION AND ACCEPTANCE

The COR, or his/her authorized representatives, will inspect from time to time the services being performed and the supplies furnished to determine whether work is being performed in a satisfactory manner, and that all supplies are of acceptable quality and standards.

The Contractor shall be responsible for any countermeasures or corrective action, within the scope of this contract, which may be required by the Contracting Officer as a result of such inspection.

D.1 Substantial Completion

(a) "*Substantial Completion*" means the stage in the progress of the work as determined and certified by the Contracting Officer in writing to the Contractor, on which the work (or a portion designated by the Government) is sufficiently complete and satisfactory. Substantial completion means that the property may be occupied or used for the purpose for which it is intended, and only minor items such as touch-up, adjustments, and minor replacements or installations remain to be completed or corrected which:

(1) do not interfere with the intended occupancy or utilization of the work, and

(2) can be completed or corrected within the time period required for final completion.

(b) The "date of substantial completion" means the date determined by the Contracting Officer or authorized Government representative as of which substantial completion of the work has been achieved.

Use and Possession upon Substantial Completion - The Government shall have the right to take possession of and use the work upon substantial completion. Upon notice by the Contractor that the work is substantially complete (a Request for Substantial Completion) and an inspection by the Contracting Officer or an authorized Government representative (including any required tests), the Contracting Officer shall furnish the Contractor a Certificate of Substantial Completion. The certificate will be accompanied by a Schedule of Defects listing items of work remaining to be performed, completed or corrected before final completion and acceptance. Failure of the Contracting Officer to list any item of work shall not relieve the Contractor of responsibility for complying with the terms of the contract. The Government's possession or use upon substantial completion shall not be deemed an acceptance of any work under the contract.

D.2 Final Completion and Acceptance

D.2.1 "Final completion and acceptance" means the stage in the progress of the work as determined by the Contracting Officer and confirmed in writing to the Contractor, at which all work required under the contract has been completed in a satisfactory manner,

subject to the discovery of defects after final completion, and except for items specifically excluded in the notice of final acceptance.

D.2.2 The "*date of final completion and acceptance*" means the date determined by the Contracting Officer when final completion of the work has been achieved, as indicated by written notice to the Contractor.

D.2.3 Final Inspection and Tests -The Contractor shall give the Contracting Officer at least five (5) days advance written notice of the date when the work will be fully completed and ready for final inspection and tests. Final inspection and tests will be started not later than the date specified in the notice unless the Contracting Officer determines that the work is not ready for final inspection and so informs the Contractor.

D.2.4 Final Acceptance - If the Contracting Officer is satisfied that the work under the contract is complete (with the exception of continuing obligations), the Contracting upon:

- Satisfactory completion of all required tests,
- A final inspection that all items by the Contracting Officer listed in the Schedule of Defects have been completed or corrected and that the work is finally complete (subject to the discovery of defects after final completion), and
- Submittal by the Contractor of all documents and other items required upon completion of the work, including a final request for payment (Request for Final Acceptance).

E. DELIVERIES OR PERFORMANCE

52.211-10 COMMENCEMENT, PROSECUTION, AND COMPLETION OF WORK
(APR 1984)

The Contractor shall be required to:

(a) commence work under this contract within **five calendar days** after the date the Contractor receives the notice to proceed,
(b) prosecute the work diligently, and,
(c) complete the entire work ready for use not later than ***(15) working days*** after receipt of Notice to Proceed (NTP)

The time stated for completion shall include final cleanup of the premises and completion of punch list items.

52.211-12 LIQUIDATED DAMAGES - CONSTRUCTION (SEP 2000)

(a) If the Contractor fails to complete the work within the time specified in the contract, or any extension, the Contractor shall pay liquidated damages to the Government in the amount of **PHP2,442.96**for each calendar day of delay until the work is completed or accepted.

(b) If the Government terminates the Contractor's right to proceed, liquidated damages will continue to accrue until the work is completed. These liquidated damages are in addition to excess costs of repurchase under the Default clause.

CONTRACTOR'S SUBMISSION OF CONSTRUCTION SCHEDULES

(a) The time for submission of the schedules referenced in FAR 52.236-15, "Schedules for Construction Contracts", paragraph (a), is hereby modified to reflect the due date for submission as **two (2) calendar days** after receipt of an executed contract".

(b) These schedules shall include the time by which shop drawings, product data, samples and other submittals required by the contract will be submitted for approval.

(c) The Contractor shall revise such schedules (1) to account for the actual progress of the work, (2) to reflect approved adjustments in the performance schedule, and (3) as required by the Contracting Officer to achieve coordination with work by the Government and any separate contractors used by the Government. The Contractor shall submit a schedule, which sequences work so as to minimize disruption at the job site.

(d) All deliverables shall be in the English language and any system of dimensions (English or metric) shown shall be consistent with that used in the contract. No extension of time shall be allowed due to delay by the Government in approving such deliverables if the Contractor has failed to act promptly and responsively in submitting its deliverables. The Contractor shall identify each deliverable as required by the contract.

(e) Acceptance of Schedule: When the Government has accepted any time schedule; it shall be binding upon the Contractor. The completion date is fixed and may be extended only by a written contract modification signed by the Contracting Officer. Acceptance or approval of any schedule or revision thereof by the Government shall not:

(1) Extend the completion date or obligate the Government to do so,
(2) Constitute acceptance or approval of any delay, or
(3) Excuse the Contractor from or relieve the Contractor of its obligation to maintain the progress of the work and achieve final completion by the established completion date.

Notice Of Delay

If the Contractor receives a notice of any change in the work, or if any other conditions arise which are likely to cause or are actually causing delays which the Contractor believes may result in late completion of the project, the Contractor shall notify the Contracting Officer. The Contractor's notice shall state the effect, if any, of such change or other conditions upon the approved schedule, and shall state in what respects, if any, the relevant schedule or the completion date should be revised. The Contractor shall give such notice promptly, not more than ten (10) days after the first event giving rise to the delay or prospective delay. Only the Contracting Officer may make revisions to the approved time schedule.

Notice to Proceed

(a) After receiving and accepting any bonds or evidence of insurance, the Contracting Officer will provide the Contractor a Notice to Proceed. The Contractor must then prosecute the work, commencing and completing performance not later than the time period established in the contract.

(b) It is possible that the Contracting Officer may elect to issue the Notice to Proceed before receipt and acceptance of any bonds or evidence of insurance. Issuance of a Notice to Proceed by the Government before receipt of the required bonds or insurance certificates or policies shall not be a waiver of the requirement to furnish these documents.

Working Hours

All work shall be performed during **0730 hours to 1630 hours, from Monday thru Friday, excluding Philippine and American holidays (Attachment 3).** Other hours, if requested by the Contractor, may be approved by the Contracting Officer's Representative (COR). The Contractor shall give 24 hours in advance to COR who will consider any deviation from the hours identified above. Changes in work hours, initiated by the Contractor, will not be a cause for a price increase.

Preconstruction Conference

A preconstruction conference will be held 2 days after contract award at ***the U.S. Embassy Manila, Seafront Compound*** to discuss the schedule, submittals, notice to proceed, mobilization and other important issues that effect construction progress. See FAR 52.236-26, Preconstruction Conference.

Deliverables - The following items shall be delivered under this contract:			
Description	Quantity	Deliver Date	Deliver To
Section G. Securities/Insurance	1	Within 10 days after award	CO
Section E. Construction Schedule	1	Within 2 days after award	COR
Section E. Preconstruction Conference	1	2 days after award	COR

Section G. Personnel Biographies	1	Within 5 days after award	COR
Description	Quantity	Deliver Date	Deliver To
Section F. Payment Request	1	Last calendar day of each month	COR
Section D. Request for Substantial Completion	1	15 days before inspection	COR
Section D. Request for Final Acceptance	1	5 days before inspection	COR

F. ADMINISTRATIVE DATA

652.242-70 CONTRACTING OFFICER'S REPRESENTATIVE (COR) (AUG 1999)

(a) The Contracting Officer may designate in writing one or more Government employees, by name or position title, to take action for the Contracting Officer under this contract. Each designee shall be identified as a Contracting Officer's Representative (COR). Such designation(s) shall specify the scope and limitations of the authority so delegated; provided, that the designee shall not change the terms or conditions of the contract, unless the COR is a warranted Contracting Officer and this authority is delegated in the designation.

(b) The COR for this contract is **David J, Ekeroth**

Payment: The Contractor's attention is directed to Section H, 52.232-5, "Payments Under Fixed-Price Construction Contracts". The following elaborates on the information contained in that clause.

Requests for payment, may be made no more frequently than monthly. Payment requests shall cover the value of labor and materials completed and in place, including a prorated portion of overhead and profit.

After receipt of the Contractor's request for payment, and on the basis of an inspection of the work, the Contracting Officer shall make a determination as to the amount, which is then due. If the Contracting Officer does not approve payment of the full amount applied for, less the retainage allowed by in 52.232-5, the Contracting Officer shall advise the Contractor as to the reasons.

Under the authority of 52.232-27(a), the 14 day period identified in FAR 52.232-27(a)(1)(i)(A) is hereby changed to 30 days.

G. SPECIAL REQUIREMENTS

G.1.0 RESERVED

G.1.1 RESERVED

G.1.2 RESERVED

G.1.3 RESERVED

G.2.0 Insurance - The Contractor is required by FAR 52.228-5, "Insurance - Work on a Government Installation" to provide whatever insurance is legally necessary. The Contractor shall at its own expense provide and maintain during the entire performance period the following insurance amounts:

G.2.1 General Liability (includes premises/operations, collapse hazard, products, completed operations, contractual, independent contractors, broad form property damage, personal injury)

1. Bodily Injury on or off the site stated in Philippine Peso:

Per Occurrence	PHP 50,000.00
Cumulative	PHP 200,000.00

2. Property Damage on or off the site in Philippine Peso:

Per Occurrence	PHP 50,000.00
Cumulative	PHP 200,000.00

G.2.2 The foregoing types and amounts of insurance are the minimums required. The Contractor shall obtain any other types of insurance required by local law or that are ordinarily or customarily obtained in the location of the work. The limit of such insurance shall be as provided by law or sufficient to meet normal and customary claims.

G.2.3 The Contractor agrees that the Government shall not be responsible for personal injuries or for damages to any property of the Contractor, its officers, agents, servants, and employees, or any other person, arising from and incident to the Contractor's performance of this contract. The Contractor shall hold harmless and indemnify the Government from any and all claims arising therefrom, except in the instance of gross negligence on the part of the Government.

G.2.4 The Contractor shall obtain adequate insurance for damage to, or theft of, materials and equipment in insurance coverage for loose transit to the site or in storage on or off the site.

G.2.5 The general liability policy required of the Contractor shall name "the United States of America, acting by and through the Department of State", as an additional

insured with respect to operations performed under this contract.

G.3.0 Document Descriptions

G.3.1 Supplemental Documents: The Contracting Officer shall furnish from time to time such detailed drawings and other information as is considered necessary, in the opinion of the Contracting Officer, to interpret, clarify, supplement, or correct inconsistencies, errors or omissions in the Contract documents, or to describe minor changes in the work not involving an increase in the contract price or extension of the contract time. The Contractor shall comply with the requirements of the supplemental documents, and unless prompt objection is made by the Contractor within 20 days, their issuance shall not provide for any claim for an increase in the Contract price or an extension of contract time.

G.3.1.1. Record Documents. The Contractor shall maintain at the project site:

(1) a current marked set of Contract drawings and specifications indicating all interpretations and clarification, contract modifications, change orders, or any other departure from the contract requirements approved by the Contracting Officer; and,
(2) a complete set of record shop drawings, product data, samples and other submittals as approved by the Contracting Officer.

G.3.1.2. RESERVED

G.4.0 Laws and Regulations - The Contractor shall, without additional expense to the Government, be responsible for complying with all laws, codes, ordinances, and regulations applicable to the performance of the work, including those of the host country, and with the lawful orders of any governmental authority having jurisdiction. Host country authorities may not enter the construction site without the permission of the Contracting Officer. Unless otherwise directed by the Contracting Officer, the Contractor shall comply with the more stringent of the requirements of such laws, regulations and orders and of the contract. In the event of a conflict between the contract and such laws, regulations and orders, the Contractor shall promptly advise the Contracting Officer of the conflict and of the Contractor's proposed course of action for resolution by the Contracting Officer.

G.4.1 The Contractor shall comply with all local labor laws, regulations, customs and practices pertaining to labor, safety, and similar matters, to the extent that such compliance is not inconsistent with the requirements of this contract.

G.4.2 The Contractor shall give written assurance to the Contracting Officer that all subcontractors and others performing work on or for the project have obtained all requisite licenses and permits.

G.4.3 The Contractor shall submit proper documentation and evidence satisfactory to the Contracting Officer of compliance with this clause.

G.5.0 Construction Personnel - The Contractor shall maintain discipline at the site and at all times take all reasonable precautions to prevent any unlawful, riotous, or disorderly conduct by or among those employed at the site. The Contractor shall ensure the preservation of peace and protection of persons and property in the neighborhood of the project against such action. The Contracting Officer may require, in writing that the Contractor remove from the work any employee that the Contracting Officer deems incompetent, careless, insubordinate or otherwise objectionable, or whose continued employment on the project is deemed by the Contracting Officer to be contrary to the Government's interests.

G.5.1 If the Contractor has knowledge that any actual or potential labor dispute is delaying or threatens to delay the timely performance of this contract, the Contractor shall immediately give notice, including all relevant information, to the Contracting Officer.

G.5.2 After award, the Contractor has ten calendar days to submit to the Contracting Officer a list of workers and supervisors assigned to this project for the Government to conduct all necessary security checks. It is anticipated that security checks will take twenty-one (21) days to perform. For each individual the list shall include:

Full Name
Place and Date of Birth
Current Address
Identification number
Completed RSO biographic data from for each personnel **(Attachment 2)**
2 pcs. 2"x2" black and white ID picture
Original copy of NBI clearance (not more than 6 months old)

Failure to provide any of the above information may be considered grounds for rejection and/or resubmittal of the application. Once the Government has completed the security screening and approved the applicants a badge will be provided to the individual for access to the site. This badge may be revoked at any time due to the falsification of data, or misconduct on site.

G.5.3 The Contractor shall provide an English speaking supervisor on site at all times. This position is considered as key personnel under this purchase order.

G.6.0 Materials and Equipment - All materials and equipment incorporated into the work shall be new and for the purpose intended, unless otherwise specified. All workmanship shall be of good quality and performed in a skillful manner that will withstand inspection by the Contracting Officer.

G.7.0 Special Warranties

G.7.1 Any special warranties that may be required under the contract shall be subject to the stipulations set forth in 52.246-21, "Warranty of Construction", as long as they are not in conflict.

G.7.2 The Contractor shall obtain and furnish to the Government all information required to make any subcontractor's, manufacturer's, or supplier's guarantee or warranty legally binding and effective. The contractor shall submit both the information and the guarantee or warranty to the Government in sufficient time to permit the Government to meet any time limit specified in the guarantee or warranty, but not later than completion and acceptance of all work under this contract.

G.8.0 Equitable Adjustments

Any circumstance for which the contract provides an equitable adjustment that causes a change within the meaning of paragraph (a) of the "Changes" clause shall be treated as a change under that clause; provided, that the Contractor gives the Contracting Officer prompt written notice (within 20 days) stating:

(a) the date, circumstances, and applicable contract clause authorizing an equitable adjustment and
(b) that the Contractor regards the event as a changed condition for which an equitable adjustment is allowed under the contract

The Contractor shall provide written notice of a differing site condition within 10 calendar days of occurrence following FAR 52.236-2, Differing Site Conditions.

G.9.0 RESERVED

H. CLAUSES

This contract incorporates one or more clauses by reference, with the same force and effect as if they were given in full text. Upon request, the Contracting Officer will make their full text available. Also, the full text of a clause may be accessed electronically at this/these address(es): *http://www.acquisition.gov/far/* or *http://farsite.hill.af.mil/vffara.htm*. Please note these addresses are subject to change.

If the Federal Acquisition Regulation (FAR) is not available at the locations indicated above, use the Department of State Acquisition website at *http://www.statebuy.state.gov/* to access links to the FAR. You may also use an internet "search engine" (for example, Google, Yahoo, Excite) to obtain the latest location of the most current FAR.

The following Federal Acquisition Regulation clause(s) is/are incorporated by reference (48 CFR CH. 1):

CLAUSE	TITLE AND DATE
52.202-1	DEFINITIONS (NOV 2013)
52.204-9	PERSONAL VERIFICATION OF CONTRACTOR PERSONNEL (JAN 2011)

52.204-10	REPORTING EXECUTIVE COMPENSATION AND FIRST-TIER SUBCONTRACT AWARDS (JUL 2013)
52.204-12	DATA UNIVERSAL NUMBERING SYSTEM NUMBER MAINTENANCE (DEC 2012)
52.204-13	SYSTEM FOR AWARD MANAGEMENT MAINTENANCE (JUL 2013)
52.209-6	PROTECTING THE GOVERNMENT'S INTEREST WHEN SUBCONTRACTING WITH CONTRACTORS DEBARRED, SUSPENDED OR PROPOSED FOR DEBARMENT (AUG 2013)
52.209-9	UPDATES OF INFORMATION REGARDING RESPONSIBILITY MATTERS (JUL 2013)
52.213-4	TERMS AND CONDITIONS –SIMPLIFIED ACQUISITIONS (OTHER THAN COMMERCIAL ITEMS) (NOV 2013)
52.216-7	ALLOWABLE COST AND PAYMENT (JUNE 2013)
52.222-1	NOTICE TO THE GOVERNMENT OF LABOR DISPUTES (FEB 1997)
52.222-19	CHILD LABOR – COOPERATION WITH AUTHORITIES AND REMEDIES (JAN 2014)
52.222-27	PROMPT PAYMENT CONSTRUCTION (JUL 2013)
52.222-50	COMBATING TRAFFICKING IN PERSONS (FEB 2009)
52.223-18	ENCOURAGING CONTRACTOR POLICIES TO BAN TEXT MESSAGING WHILE DRIVING (AUG 2011)
52.225-13	RESTRICTIONS ON CERTAIN FOREIGN PURCHASES (JUNE 2008)
52.225-14	INCONSISTENCY BETWEEN ENGLISH VERSION AND TRANSLATION OF CONTRACT (FEB 2000)
52.228-5	INSURANCE - WORK ON A GOVERNMENT INSTALLATION (JAN 1997)
52.228-11	PLEDGES OF ASSETS (JAN 2012)
52.228-13	ALTERNATIVE PAYMENT PROTECTION (JUL 2000)
52.229-6	TAXES - FOREIGN FIXED-PRICE CONTRACTS (FEB 2013)
52.229-7	TAXES- FIXED PRICE CONTRACTS WITH FOREIGN GOVERNMENTS (FEB 2013)
52.232-5	PAYMENTS UNDER FIXED-PRICE CONSTRUCTION CONTRACTS (SEP 2002)
52.232-8	DISCOUNTS FOR PROMPT PAYMENT (FEB 2002)
52.232-11	EXTRAS (APR 1984)

52.232-18	AVAILABILITY OF FUNDS (APR 1984)
52.232-22	LIMITATION OF FUNDS (APR 1984)
52.232-24	PROHIBITION OF ASSIGNMENT OF CLAIMS (JAN 1986)
52.232-25	PROMPT PAYMENT (JUL 2013)
52.232-27	PROMPT PAYMENT FOR CONSTRUCTION CONTRACTS (JUL 2013)
52.232-33	PAYMENT BY ELECTRONIC FUNDS TRANSFER - SYSTEM FOR AWARD MANAGEMENT (JUL 2013)
52.232-34	PAYMENT BY ELECTRONIC FUNDS TRANSFER – OTHER THAN SYSTEM FOR AWARD MANAGEMENT (JUL 2013)
52.233-1	DISPUTES (JULY 2002) *Alternate I (DEC 1991)*
52.233-3	PROTEST AFTER AWARD (AUG 1996)
52.236-2	DIFFERING SITE CONDITIONS (APR 1984)
52.236-3	SITE INVESTIGATION AND CONDITIONS AFFECTING THE WORK (APR 1984)
52.236-5	MATERIAL AND WORKMANSHIP (APR 1984)
52.236-6	SUPERINTENDENCE BY THE CONTRACTOR (APR 1984)
52.236-7	PERMITS AND RESPONSIBILITIES (NOV 1991)
52.236-8	OTHER CONTRACTS (APR 1984)
52.236-9	PROTECTION OF EXISTING VEGETATION, STRUCTURES, EQUIPMENT, UTILITIES, AND IMPROVEMENTS (APR 1984)
52.236-10	OPERATIONS AND STORAGE AREAS (APR 1984)
52.236-11	USE AND POSSESSION PRIOR TO COMPLETION (APR 1984)
52.236-12	CLEANING UP (APR 1984)
52.236-14	AVAILABILITY AND USE OF UTILITY SERVICES (APR 1984)
52.236-15	SCHEDULES FOR CONSTRUCTION CONTRACTS (APR 1984)
52.236-21 1997)	SPECIFICATIONS AND DRAWINGS FOR CONSTRUCTION (FEB
52.236-26	PRECONSTRUCTION CONFERENCE (FEB 1995)
52.242-14	SUSPENSION OF WORK (APR 1984)

52.243-4 CHANGES (JUNE 2007)

52.243-5 CHANGES AND CHANGED CONDITIONS (APR 1984)

52.244-6 SUBCONTRACTS FOR COMMERCIAL ITEMS (DEC 2013)

52.245-2 GOVERNMENT PROPERTY INSTALLATION OPERATION SERVICES (APR 2012)

52.245-9 USE AND CHARGES (APR 2012)

52.246-12 INSPECTION OF CONSTRUCTION (AUG 1996)

52.246-17 WARRANTY OF SUPPLIES OF A NONCOMPLEX NATURE (JUNE 2003)

52.246-21 WARRANTY OF CONSTRUCTION (MAR 1994)

52.249-2 TERMINATION FOR CONVENIENCE OF THE GOVERNMENT (FIXED-PRICE) (APR 2012) *Alternate I (SEP 1996)*

52.249-10 DEFAULT (FIXED-PRICE CONSTRUCTION) (APR 1984)

52.249-14 EXCUSABLE DELAYS (APR 1984)

The following Department of State Acquisition Regulation (DOSAR) clause(s) is/are set forth in full text:

652.204-70 DEPARTMENT OF STATE PERSONAL IDENTIFICATION CARD ISSUANCE PROCEDURES (MAY 2011)

(a) The Contractor shall comply with the Department of State (DOS) Personal Identification Card Issuance Procedures for all employees performing under this contract who require frequent and continuing access to DOS facilities, or information systems. The Contractor shall insert this clause in all subcontracts when the subcontractor's employees will require frequent and continuing access to DOS facilities, or information systems.

(b) The DOS Personal Identification Card Issuance Procedures may be accessed at *http://www.state.gov/m/ds/rls/rpt/c21664.htm* .

(End of clause)

CONTRACTOR IDENTIFICATION (JULY 2008)

Contract performance may require contractor personnel to attend meetings with government personnel and the public, work within government offices, and/or utilize government email.

Contractor personnel must take the following actions to identify themselves as non-federal employees:

1) Use an e-mail signature block that shows name, the office being supported and company affiliation (e.g. "John Smith, Office of Human Resources, ACME Corporation Support Contractor");
2) Clearly identify themselves and their contractor affiliation in meetings;
3) Identify their contractor affiliation in Departmental e-mail and phone listings whenever contractor personnel are included in those listings; and
4) Contractor personnel may not utilize Department of State logos or indicia on business cards.

(End of clause)

652.236-70 ACCIDENT PREVENTION (APR 2004)

(a) *General*. The Contractor shall provide and maintain work environments and procedures which will safeguard the public and Government personnel, property, materials, supplies, and equipment exposed to contractor operations and activities; avoid interruptions of Government operations and delays in project completion dates; and, control costs in the performance of this contract. For these purposes, the Contractor shall:

(1) Provide appropriate safety barricades, signs and signal lights;

(2) Comply with the standards issued by any local government authority having jurisdiction over occupational health and safety issues; and,

(3) Ensure that any additional measures the Contracting Officer determines to be reasonably necessary for this purpose are taken.

(4) For overseas construction projects, the Contracting Officer shall specify in writing additional requirements regarding safety if the work involves:

(i) Scaffolding;

(ii) Work at heights above two (2) meters;

(iii) Trenching or other excavation greater than one (1) meter in depth;

(iv) Earth moving equipment;

(v) Temporary wiring, use of portable electric tools, or other recognized electrical hazards. Temporary wiring and portable electric tools require the use of a ground fault circuit interrupter (GFCI) in the affected circuits; other electrical hazards may also require the use of a GFCI;

(vi) Work in confined spaces (limited exits, potential for oxygen less that 19.5 percent or combustible atmosphere, potential for solid or liquid engulfment, or other hazards considered to be immediately dangerous to life or health such as water tanks, transformer vaults, sewers, cisterns, etc.);

(vii) Hazardous materials – a material with a physical or health hazard including but not limited to, flammable, explosive, corrosive, toxic, reactive or unstable, or any operations which creates any kind of contamination inside an occupied building such as dust from demolition activities, paints, solvents, etc.; or

(viii) Hazardous noise levels.

(b) *Records*. The Contractor shall maintain an accurate record of exposure data on all accidents incident to work performed under this contract resulting in death,

traumatic injury, occupational disease, or damage to or theft of property, materials, supplies, or equipment. The Contractor shall report this data in the manner prescribed by the Contracting Officer.

(c) *Subcontracts.* The Contractor shall be responsible for its subcontractors' compliance with this clause.

(d) *Written program.* Before commencing work, the Contractor shall:

(1) Submit a written plan to the Contracting Officer for implementing this clause. The plan shall include specific management or technical procedures for effectively controlling hazards associated with the project; and,

(2) Meet with the Contracting Officer to discuss and develop a mutual understanding relative to administration of the overall safety program.

(e) *Notification.* The Contracting Officer shall notify the Contractor of any non-compliance with these requirements and the corrective actions required. This notice, when delivered to the Contractor or the Contractor's representative on site, shall be deemed sufficient notice of the non-compliance and corrective action required. After receiving the notice, the Contractor shall immediately take corrective action. If the Contractor fails or refuses to promptly take corrective action, the Contracting Officer may issue an order suspending all or part of the work until satisfactory corrective action has been taken. The Contractor shall not be entitled to any equitable adjustment of the contract price or extension of the performance schedule on any suspension of work order issued under this clause.

(End of clause)

652.242-73 AUTHORIZATION AND PERFORMANCE (AUG 1999)

(a) The Contractor warrants the following:

(1) That is has obtained authorization to operate and do business in the country or countries in which this contract will be performed;

(2) That is has obtained all necessary licenses and permits required to perform this contract; and,

(3) That it shall comply fully with all laws, decrees, labor standards, and regulations of said country or countries during the performance of this contract.

(b) If the party actually performing the work will be a subcontractor or joint venture partner, then such subcontractor or joint venture partner agrees to the requirements of paragraph (a) of
this clause.

652.243-70 NOTICES (AUG 1999)

Any notice or request relating to this contract given by either party to the other shall be in writing. Said notice or request shall be mailed or delivered by hand to the other party at the address provided in the schedule of the contract. All modifications to the contract must be made in writing by the Contracting Officer.

652.229-71 PERSONAL PROPERTY DISPOSITION AT POSTS ABROAD (AUG 1999)

Regulations at 22 CFR Part 136 require that U.S. Government employees and their families do not profit personally from sales or other transactions with persons who are not themselves entitled to exemption from import restrictions, duties, or taxes. Should the Contractor experience importation or tax privileges in a foreign country because of its contractual relationship to the United States Government, the Contractor shall observe the requirements of 22 CFR Part 136 and all policies, rules, and procedures issued by the chief of mission in that foreign country.

I. LIST OF ATTACHMENTS

ATTACHMENT NUMBER	DESCRIPTION OF ATTACHMENT	NUMBER OF PAGES
Attachment 1	Scope of Work	3
Attachment 2	RSO Biographic Data	2
Attachment 3	Philippine and American Holidays	1
Attachment 4	Drawing	1
Attachment 5	Specifications	2

J. QUOTATION INFORMATION

A. QUALIFICATIONS OF OFFERORS

Offerors/quoters must be technically qualified and financially responsible to perform the work described in this solicitation. At a minimum, each Offeror/Quoter must meet the following requirements:

(1) Be able to understand written and spoken English;
(2) Have an established business with a permanent address and telephone listing;
(3) Be able to demonstrate prior construction experience with suitable references;
(4) Have the necessary personnel, equipment and financial resources available to perform the work;
(5) Have all licenses and permits required by local law;
(6) Meet all local insurance requirements;
(7) Have the ability to obtain or to post adequate performance security, such as bonds, irrevocable letters of credit or guarantees issued by a reputable financial institution;
(8) Have no adverse criminal record; and
(9) Have no political or business affiliation which could be considered contrary to the interests of the United States.

B. SUBMISSION OF QUOTATIONS

This solicitation is for the performance of the construction services described in SCOPE OF WORK, and the Attachments which are a part of this request for quotation.

Each quotation must consist of the following:		
Volume	Title	Number of Copies*
I	Standard Form 18 (SF18) including a completed Section A, "PRICE", and a completed Section L, "REPRESENTATIONS AND CERTIFICATIONS".	2
II	Performance schedule in the form of a "bar chart" and Business Management/Technical Proposal	2

Submit the complete quotation to the address indicated. If mailed, on Standard Form 18, or if hand-delivered, use the address set forth below.

CONTRACTING & PROCUREMENT (C&P)
General Services Office (GSO)
American Embassy Manila
Seafront Compound, Roxas Boulevard
Pasay City 1300

The Offeror/Quoter shall identify and explain/justify any deviations, exceptions, or conditional assumptions taken with respect to any of the instructions or requirements of this request for quotation in the appropriate volume of the offer.

Volume II: Performance schedule and Business Management/Technical Proposal.

(a) Present the performance schedule in the form of a "bar chart" indicating when the various portions of the work will be commenced and completed within the required schedule. This bar chart shall be in sufficient detail to clearly show each segregable portion of work and its planned commencement and completion date.

(b) The Business Management/Technical Proposal shall be in two parts, including the following information:

Proposed Work Information - Provide the following:

(1) A list of the names, addresses and telephone numbers of the owners, partners, and principal officers of the Offeror;

(2) The name and address of the Offeror's field superintendent for this project;

(3) A list of the names, addresses, and telephone numbers of subcontractors and principal materials suppliers to be used on the project, indicating what portions of the work will be performed by them; and,

Experience and Past Performance - List all contracts and subcontracts your company has held over the past three years for the same or similar work. Provide the following information for each contract and subcontract:

(1) Customer's name, address, and telephone numbers of customer's lead contract and technical personnel;

(2) Contract number and type;

(3) Date of the contract award place(s) of performance, and completion dates; Contract dollar value;

(4) Brief description of the work, including responsibilities; and

(5) Any litigation currently in process or occurring within last 5 years.

(6) Any document from TRANE as proof of recognition.

C. 52.236-27 SITE VISIT (CONSTRUCTION) (FEB 1995)

(a) The clauses at 52.236-2, Differing Site Conditions, and 52.236-3, Site Investigations and Conditions Affecting the Work, will be included in any contract awarded as a result of this solicitation. Accordingly, offerors or quoters are urged and expected to inspect the site where the work will be performed.

(b) A site visit has been scheduled for **Thursday, 18 September, 2014 at 9:00 AM.**

(c) Participants will meet at ***Roxas Boulevard Gate, Seafront Compound Pasay City.***

D. MAGNITUDE OF CONSTRUCTION PROJECT

It is anticipated that the range in price of this contract will be: between PHP1,125,000 and PHP4,500,000

E. LATE QUOTATIONS. Late quotations shall be handled in accordance with FAR.

F. 52.252-1 SOLICITATION PROVISIONS INCORPORATED BY REFERENCE (FEB 1998)

This contract incorporates the following provisions by reference, with the same force and effect as if they were given in full text. Upon request, the Contracting Officer will make their full text available. The offeror is cautioned that the listed provisions may include blocks that must be completed by the offeror and submitted with its quotation or offer. In lieu of submitting the full text of those provisions, the offeror may identify the provision by paragraph identifier and provide the appropriate information with its quotation or offer. Also, the full text of a solicitation provision may be accessed electronically at: *http://acquisition.gov/far/index.html/* or *http://farsite.hill.af.mil/vffara.htm*. Please note these addresses are subject to change.

If the Federal Acquisition Regulation (FAR) is not available at the locations indicated above, use the Department of State Acquisition website at http://www.statebuy.state.gov to access the link to the FAR, or use of an Internet "search engine" (for example, Google, Yahoo or Excite) is suggested to obtain the latest location of the most current FAR.

The following Federal Acquisition Regulation provisions are incorporated by reference (48 CFR CH. 1):

PROVISION	TITLE AND DATE
52.204-6	DATA UNIVERSAL NUMBERING SYSTEM (DUNS) NUMBER (JUL 2013)
52.204-7	SYSTEM FOR AWARD MANAGEMENT (JUL 2013)
52.214-34	SUBMISSION OF OFFERS IN THE ENGLISH LANGUAGE (APR 1991)
52.215-1	INSTRUCTIONS TO OFFERORS--COMPETITIVE ACQUISITION (JAN 2004)

K. EVALUATION CRITERIA

Award will be made to the lowest priced, acceptable, responsible quoter. The Government reserves the right to reject quotations that are unreasonably low or high in price.

The Government will determine acceptability by assessing the offeror's compliance with the terms of the RFQ. The Government will determine responsibility by analyzing whether the apparent successful quoter complies with the requirements of FAR 9.1, including:

- ability to comply with the required performance period, taking into consideration all existing commercial and governmental business commitments;
- satisfactory record of integrity and business ethics;
- necessary organization, experience, and skills or the ability to obtain them;
- necessary equipment and facilities or the ability to obtain them; and
- otherwise qualified and eligible to receive an award under applicable laws and regulations.

SECTION L - REPRESENTATIONS, CERTIFICATIONS AND OTHER STATEMENTS OF OFFERORS OR QUOTERS

L.1 52.204-3 TAXPAYER IDENTIFICATION (OCT 1998)

(a) Definitions

"Common parent", as used in this provision, means that corporate entity that owns or controls an affiliated group of corporations that files its Federal income tax returns on a consolidated basis, and of which the offeror is a member.
"Taxpayer Identification Number (TIN)", as used in this provision, means the number required by the IRS to be used by the offeror in reporting income tax and other returns. The TIN may be either a Social Security Number or an Employer Identification Number.

(b) All offerors must submit the information required in paragraphs (d)through (f) of this provision in order to comply with debt collection requirements of 31 U.S.C. 7701(c) and 3325 (d), reporting requirements of 26 USC 6041, 6041A, and 6050M and implementing regulations issued by the Internal Revenue Service (IRS). If the resulting contract is subject to the reporting requirements described in FAR 4.904, the failure or refusal by the offeror to furnish the information may result in a 31 percent reduction of payments otherwise due under the contract.

(c) The TIN may be used by the Government to collect and report on any delinquent amounts arising out of the offeror's relationship with the Government (31 USC 7701(c)(3)). If the resulting contract is subject to the payment reporting requirements described in FAR 4.904, the TIN provided hereunder may be matched with IRS records to verify the accuracy of the offeror's TIN.

(d) Taxpayer Identification Number (TIN)

TIN:	
	TIN has been applied for
	TIN is not required because:
	Offeror is a nonresident alien, foreign corporation, or foreign partnership that does not have income effectively connected with the conduct of a trade or business in the U.S. and does not have an office or place of business or a fiscal paying agent in the U.S.
	Offeror is an agency or instrumentality of a foreign government
	Offeror is an agency or instrumentality of the Federal Government

(e) Type of Organization

	Sole Proprietorship
	Partnership
	Corporate Entity (not tax exempt)
	Corporate Entity (tax exempt)
	Government entity (Federal, State or local)
	Foreign Government
	International organization per 26 CFR 1.6049-4
	Other:

(f) Common Parent

	Offeror is not owned or controlled by a common parent as defined in paragraph (a) of this clause.
	Name and TIN of common parent
Name	
TIN	

(End of provision)

L.2 52.204-8 ANNUAL REPRESENTATIONS AND CERTIFICATIONS (JAN 2014)

(a)(1) The North American Industry Classification System (NAICS) code(s) for this acquisition is/are:

236118 - Construction Management, residential remodeling
236220 - Construction Management, commercial and institutional building or Warehouse construction
237110 - Construction Management, water and sewage line and related structures
237310 - Construction Management, highway road, street or bridge
237990 - Construction Management, outdoor recreation facility

(2) The small business size standard is **$33.5 Million USD**.

(3) The small business size standard for a concern which submits an offer in its own name, other than on a construction or service contract, but which proposes to furnish a product which it did not itself manufacture, is 500 employees.

(b)(1) If the provision at 52.204-7, System for Award Management, is included in this solicitation, paragraph (d) of this provision applies.

(2) If the provision at 52.204-7 is not included in this solicitation, and the offeror is currently registered in the System for Award Management (SAM), and has completed the Representations and Certifications section of SAM electronically, the offeror may choose to use paragraph (d) of this provision instead of completing the corresponding individual representations and certifications in the solicitation. The offeror shall indicate which option applies by checking one of the following boxes:

[ ] (i) Paragraph (d) applies.

[ ] (ii) Paragraph (d) does not apply and the offeror has completed the individual representations and certifications in the solicitation.

(c)(1) The following representations or certifications in SAM are applicable to this solicitation as indicated:

(i) 52.203-2, Certificate of Independent Price Determination. This provision applies to solicitations when a firm-fixed-price contract or fixed-price contract with economic price adjustment is contemplated, unless—

(A) The acquisition is to be made under the simplified acquisition procedures in Part 13;

(B) The solicitation is a request for technical proposals under two-step sealed bidding procedures; or

(C) The solicitation is for utility services for which rates are set by law or regulation.

(ii) 52.203-11, Certification and Disclosure Regarding Payments to Influence Certain Federal Transactions. This provision applies to solicitations expected to exceed $150,000.

(iii) 52.204-3, Taxpayer Identification. This provision applies to solicitations that do not include the provision at 52.204-7, System for Award Management.

(iv) 52.204-5, Women-Owned Business (Other Than Small Business). This provision applies to solicitations that—

(A) Are not set aside for small business concerns;

(B) Exceed the simplified acquisition threshold; and

(C) Are for contracts that will be performed in the United States or its outlying areas.

(v) 52.209-2, Prohibition on Contracting with Inverted Domestic Corporations—Representation. This provision applies to solicitations using funds appropriated in fiscal years 2008, 2009, 2010, or 2012.

(vi) 52.209-5, Certification Regarding Responsibility Matters. This provision applies to solicitations where the contract value is expected to exceed the simplified acquisition threshold.

(vii) 52.214-14, Place of Performance—Sealed Bidding. This provision applies to invitations for bids except those in which the place of performance is specified by the Government.

(viii) 52.215-6, Place of Performance. This provision applies to solicitations unless the place of performance is specified by the Government.

(ix) 52.219-1, Small Business Program Representations (Basic & Alternate I). This provision applies to solicitations when the contract will be performed in the United States or its outlying areas.

(A) The basic provision applies when the solicitations are issued by other than DoD, NASA, and the Coast Guard.

(B) The provision with its Alternate I applies to solicitations issued by DoD, NASA, or the Coast Guard.

(x) 52.219-2, Equal Low Bids. This provision applies to solicitations when contracting by sealed bidding and the contract will be performed in the United States or its outlying areas.

(xi) 52.222-22, Previous Contracts and Compliance Reports. This provision applies to solicitations that include the clause at 52.222-26, Equal Opportunity.

(xii) 52.222-25, Affirmative Action Compliance. This provision applies to solicitations, other than those for construction, when the solicitation includes the clause at 52.222-26, Equal Opportunity.

(xiii) 52.222-38, Compliance with Veterans' Employment Reporting Requirements. This provision applies to solicitations when it is anticipated the contract award will exceed the simplified acquisition threshold and the contract is not for acquisition of commercial items.

(xiv) 52.223-1, Biobased Product Certification. This provision applies to solicitations that require the delivery or specify the use of USDA–designated items; or include the clause at 52.223-2, Affirmative Procurement of Biobased Products Under Service and Construction Contracts.

(xv) 52.223-4, Recovered Material Certification. This provision applies to solicitations that are for, or specify the use of, EPA–designated items.

(xvi) 52.225-2, Buy American Act Certificate. This provision applies to solicitations containing the clause at 52.225-1.

(xvii) 52.225-4, Buy American Act—Free Trade Agreements—Israeli Trade Act Certificate. (Basic, Alternates I, II, and III.) This provision applies to solicitations containing the clause at 52.225-3.

(A) If the acquisition value is less than $25,000, the basic provision applies.

(B) If the acquisition value is $25,000 or more but is less than $50,000, the provision with its Alternate I applies.

(C) If the acquisition value is $50,000 or more but is less than $79,507, the provision with its Alternate II applies.

(D) If the acquisition value is $79,507 or more but is less than $100,000, the provision with its Alternate III applies.

(xviii) 52.225-6, Trade Agreements Certificate. This provision applies to solicitations containing the clause at 52.225-5.

(xix) 52.225-20, Prohibition on Conducting Restricted Business Operations in Sudan—Certification. This provision applies to all solicitations.

(xx) 52.225-25, Prohibition on Contracting with Entities Engaging in Certain Activities or Transactions Relating to Iran-Representation and Certifications. This provision applies to all solicitations.

(xxi) 52.226-2, Historically Black College or University and Minority Institution Representation. This provision applies to—

(A) Solicitations for research, studies, supplies, or services of the type normally acquired from higher educational institutions; and

(B) For DoD, NASA, and Coast Guard acquisitions, solicitations that contain the clause at 52.219-23, Notice of Price Evaluation Adjustment for Small Disadvantaged Business Concerns.

(2) The following certifications are applicable as indicated by the Contracting Officer:

[*Contracting Officer check as appropriate.*]

__ (i) 52.219-22, Small Disadvantaged Business Status.

__ (A) Basic.

__ (B) Alternate I.

__ (ii) 52.222-18, Certification Regarding Knowledge of Child Labor for Listed End Products.

__ (iii) 52.222-48, Exemption from Application of the Service Contract Act to Contracts for Maintenance, Calibration, or Repair of Certain Equipment Certification.

__ (iv) 52.222-52, Exemption from Application of the Service Contract Act to Contracts for Certain Services–Certification.

__ (v) 52.223-9, with its Alternate I, Estimate of Percentage of Recovered Material Content for EPA–Designated Products (Alternate I only).

__ (vi) 52.227-6, Royalty Information.

__ (A) Basic.

__(B) Alternate I.

__ (vii) 52.227-15, Representation of Limited Rights Data and Restricted Computer Software.

(d) The offeror has completed the annual representations and certifications electronically via the SAM website accessed through https://www.acquisition.gov. After reviewing the SAM database information, the offeror verifies by submission of the offer that the representations and certifications currently posted electronically that apply to this solicitation as indicated in paragraph (c) of this provision have been entered or updated within the last 12 months, are current, accurate, complete, and applicable to this solicitation (including the business size standard applicable to the NAICS code referenced for this solicitation), as of the date of this offer and are incorporated in this offer by reference (see FAR 4.1201); except for the changes identified below [*offeror to insert changes, identifying change by clause number, title, date*]. These amended representation(s) and/or certification(s) are also incorporated in this offer and are current, accurate, and complete as of the date of this offer.

FAR CLAUSE #	TITLE	DATE	CHANGE
_____	_____	_____	_____

Any changes provided by the offeror are applicable to this solicitation only, and do not result in an update to the representations and certifications posted on SAM.

(End of provision)

L.3. 52.225-18 PLACE OF MANUFACTURE (SEPT 2006)

(a) *Definitions*. As used in this clause—

" Manufactured end product" means any end product in Federal Supply Classes (FSC) 1000-9999, except—

(1) FSC 5510, Lumber and Related Basic Wood Materials;
(2) Federal Supply Group (FSG) 87, Agricultural Supplies;
(3) FSG 88, Live Animals;
(4) FSG 89, Food and Related Consumables;
(5) FSC 9410, Crude Grades of Plant Materials;
(6) FSC 9430, Miscellaneous Crude Animal Products, Inedible;
(7) FSC 9440, Miscellaneous Crude Agricultural and Forestry Products;
(8) FSC 9610, Ores;
(9) FSC 9620, Minerals, Natural and Synthetic; and
(10) FSC 9630, Additive Metal Materials.

"Place of manufacture" means the place where an end product is assembled out of components, or otherwise made or processed from raw materials into the finished product that is to be provided to the Government. If a product is disassembled and reassembled, the place of reassembly is not the place of manufacture.

(b) For statistical purposes only, the offeror shall indicate whether the place of manufacture of the end products it expects to provide in response to this solicitation is predominantly—

(1) [ ] In the United States (Check this box if the total anticipated price of offered end products manufactured in the United States exceeds the

total anticipated price of offered end products manufactured outside the United States); or

(2) [ ] Outside the United States.

(End of provision)

L.4 AUTHORIZED CONTRACT ADMINISTRATOR

If the offeror does not fill-in the blanks below, the official who signed the offer will be deemed to be the offeror's representative for Contract Administration, which includes all matters pertaining to payments.

Name:
Telephone Number:
Address:

L.5 652.228-70 DEFENSE BASE ACT – COVERED CONTRACTOR EMPLOYEES (JUNE 2006)

(a) Bidders/offerors shall indicate below whether or not any of the following categories of employees will be employed on the resultant contract, and, if so, the number of such employees:

Category	Yes/No	Number	
(1) United States citizens or residents			
(2) Individuals hired in the United States, regardless of citizenship			
(3) Local nationals or third country nationals where contract performance takes place in a country where there are no local workers' compensation laws		local nationals:	
		third-country nationals:	
(4) Local nationals or third country nationals where contract performance takes place in a country where there are local workers' compensation laws		local nationals:	
		third-country nationals:	

(b) The Contracting Officer has determined that for performance in the country of **Philippines**.

☒ Workers' compensation laws exist that will cover local nationals and third country nationals.

☐ Workers' compensation laws do not exist that will cover local nationals and third country nationals.

(c) If the bidder/offeror has indicated "yes" in block (a)(4) of this provision, the bidder/offeror shall not purchase Defense Base Act insurance for those employees. However, the bidder/offeror shall assume liability toward the employees and their beneficiaries for war-hazard injury, death, capture, or detention, in accordance with the clause at FAR 52.228-4.

(d) RESERVED

(End of provision)

PROJECT: **Installation of 50 Hp Compressor System at GPS Building**
SITE: **GPS Building, Seafront Compound, US Embassy, Pasay City**

SCOPE OF WORK

PART 1 - GENERAL

C.1.1 The contractor shall furnish all required personnel, tools of trade, equipment, materials, transportation, delivery and a competent English speaking supervisor or foreman who will stay at the job site every work day throughout the progress of the project in connection with the Installation of 50 Hp Compressor System, US Embassy Seafront Compound, Pasay City in compliance with the set of drawings and technical provisions contained herein.

C.1.2 The work shall consist of:

1. Installation of pipes, fittings and support at the compressor room including tapping to the existing air main.
2. Installation of exhaust air ducting and supports.
3. Installation of electrical wire ways including tapping to the 125A/3P circuit breaker at the bus bar.
4. Area should be barricaded with caution tape if necessary and boarding with warning signboard place strategically in the area.
5. Contractor to provide As-Built Drawing signed and sealed by a License Electrical Engineer.
6. The contractor shall submit all sample of materials to be used for approval of COR.

C.2 **PERSONNEL**

C.2.1 The Contractor shall provide sufficient personnel possessing the skills and knowledge to perform the work required of this project.

C.2.2 Immediately on commencement of work, the Contractor shall assign on site a knowledgeable English speaking project supervisor who shall be responsible for the overall management and coordination of this contract, receive instructions from the COR, resolve problems and with authority to act for the Contractor.

C.3 **QUALITY CONTROL**

C.3.1 All work shall be done in favorable weather conditions or the work shall be suitably protected from the weather.

C.3.2 All damages inflicted on the existing surrounding structures and property resulting from the performance of this project must be repaired or restored to its original condition at the Contractor's expense.

C.3.4 Liquidated damages of **Php 2,442.96** shall be assessed for each day the work remains incomplete beyond the work deadline.

C.3.5 The contractor shall guarantee workmanship for one (1) year determined from the date of final acceptance.

C.4 WORKING HOURS

C.5.1 Working hours shall be from 0730 hours to 1630 hours, from Monday thru Friday.

C.5.2 Request for Saturday, Sunday, holidays and other hours of work shall be submitted to the COR at least two (2) days in advance for the approval of the Security Office.

C.6 PROHIBITIONS

C.6.1 Smoking is strictly prohibited at the work site.

C.6.2 Contractor's personnel are to use only proper toilet facilities. Urinating on walls, plants, trees, grass and other areas is strictly prohibited. Violator shall be permanently removed from the compound. Contractor shall provide commercial portable toilet.

C.7 SECURITY

C.7.1 Contractor's personnel must stay within the working site and not wander around the adjacent areas not covered under this scope of work.

C.7.2 Contractor's workers are prohibited to stay inside the work area after each day's work.

C.8 GOVERMENT-FURNISHED MATERIALS, PROPERTY AND SERVICES

C.8.1 Electric power and water required for this project shall be supplied by the Government. The Contractor is responsible for all connections and extensions to the work area.

C.8.2 The project shall be monitored and inspected by the COR and/or his assigned project inspector upon whose approval the work will be accepted.

C.8.3 The COR shall designate the area where the contractor can build a temporary storage and lockers space which shall be kept clean, orderly and secure at all times. Contractor's personnel are not allowed to roam around the premises during work hours or stay after each day's work.

C.8.4 Circuit Breaker 125A/3P at the 460v bus bar.

C.8.5 Hauling/setting of equipment.

C.9 CONTRACTOR FURNISHED ITEMS

C.9.1 MATERIALS

1. The contractor shall provide all labor, and supplies to perform the services required in this contract.
2. The contractor shall put up temporary barriers or yellow caution tapes to keep away people and/or vehicles from work site.

C.9.2 EQUIPMENT & TOOLS

1. The Contractor shall furnish all tools and special equipment to perform section C.1.2.
2. All temporary connections to existing utility lines will be made by the Contractor. The Contractor shall enforce strict utilities conservation practices.

C.I0 SPECIFIC TASK

C.10.1 The contractor guarantees to complete the work within **Fifteen (15) working days** from the date of Notice to Proceed. ***Delivery of equipment is within 12-14 weeks upon receipt of the Purchase Order.*** A-001

C.10.2. The Contractor shall and submit to the COR or GTM a "Daily Log Sheet", completed daily. Data to be reported includes data on workers by classification, the move-on and move-off of construction equipment furnished by the prime and subcontractor or furnished by the Government, and materials and equipment delivered to the site.

C.11 CLEANING TASK

C.11.1 The contractor shall continuously, during the progress of the work, remove and dispose of dirt and debris and keep work area clean, neat and orderly and in such order as to prevent safety hazards. Debris shall be collected and removed from the job-site daily.

C.11.2 Domestic rubbish containers on the premises shall not be utilized by the Contractor for storage or disposal of construction rubbish.

C.12 SAFETY

C.12.1 The project safety, in all respects, is the sole responsibility of the Contractor.

C.12.2 The Contractor shall comply with the U.S. OSHA (Occupational Safety and Health Administration) and Local Safety and Health Requirements, and shall assume full responsibility and liability for compliance with all other applicable standards and regulations pertaining to accident prevention, life, health, and safety of personnel, as well as preventing damage to materials, supplies, and equipment. The Contractor will hold the Government and its agents harmless for any action, errors, or omission on his part, his employees, or his subcontractors that result in illness, injury or death.

C.12.3 The Contractor shall provide employees with and require the use of safety equipment, personal protective equipment and device necessary for protection.

C.12.4 The Contractor is responsible for all injuries to his workers.

ATTACHMENT #2

RSO BIOGRAPHIC DATA

Biographical Data Form for Contractual Hires
Diplomatic Security Investigative Unit (DSIU) 301-2661/301-2078

Full Name:_____
(Last) (First) (Middle)
Present Address:_____ Starting:_____
Provincial Address:_____ From:_____ To:_____
Tel. No:_____ Date of Birth:_____ Place of Birth:_____
Other Names Used:_____
(Maiden, Nickname, etc.)
Marital Status:_____ Name of Spouse:_____
Height:_____ Weight:_____ Hair Color:_____ Eye Color:_____

RELATIVES (Parents, Brothers, Sisters, and In-Laws)

Name	Relationship	Nationality	Occupation	Present address in full

EMPLOYMENT HISTORY: (Current and Last Three Previous Employers)

Position	Name & Address of Employer	Date	Reason for Leaving

Have you ever been fired or forced to resign for any reason? (If yes, give details):

_____

_____

Have you ever been arrested or charged with any offense by the police or the military? (If yes, provide full details)_____

_____

Are you now, or have you ever been, a member of any organization or association that advocates the overthrow of the United States Government by force or violence? (If yes, provide full details):

_____

E. CERTIFICATION

I certify that the information above is true, complete, and correct, to the best of my knowledge.

Signature

Date

Please Submit the Following to DSIU – Room 138-B, NOX 1 Building

FIRST TIME BADGE AND RECORD CHECK

- **Original copy of NBI clearance**
- **Original copy of Barangay clearance**
- **Original copy of Police clearance**
- **Biographic data sheet**
- **Cover memo from Employer/Section Head**
- **2X2 photo**

FOR BADGE RENEWALS ONLY

- **Cover memo from Employer/Section Head**
- **Biographic data form**
- **2x2 photo**

ATTACHMENT #3

PHILIPPINE AND AMERICAN HOLIDAYS FOR THE CALENDAR YEAR 2014

Holiday	Nationality	Legal Date	Closing Date
New Year's Day	U.S./PHL	Jan 1, Wed	Jan 1, Wed
M. L. King Jr. Day	U.S.	Jan 20, Mon	Jan 20, Mon
U.S. President's Day	U.S.	Feb 17, Mon	Feb 17, Mon
Bataan & Corregidor / Heroism Day	PHL	Apr 9, Wed	Apr 9, Wed
Maundy Thursday	PHL	Apr 17, Thurs	Apr 17, Thurs
Good Friday	PHL	Apr 18, Fri	Apr 18, Fri
Philippine Labor Day	PHL	May 1, Thurs	May 1, Thurs
U.S. Memorial Day	U.S.	May 26, Mon	May 26, Mon
Philippine Independence Day	PHL	Jun 12, Thurs	Jun 12, Thurs
U.S. Independence Day	U.S.	Jul 4, Fri	Jul 4, Fri
Eid'l Fitr	PHL	TBA	TBA
Ninoy Aquino Day	PHL	Aug 21, Thurs	Aug 21, Thurs
U.S. Labor Day	U.S.	Sep 1, Mon	Sep 1, Mon
Columbus Day	U.S.	Oct 13, Mon	Oct 13, Mon
U.S. Veterans Day	U.S.	Nov 11, Tues	Nov 11, Tues
U.S. Thanksgiving Day	U.S.	Nov 27, Thurs	Nov 27, Thurs
Christmas Day	U.S./PHL	Dec 25, Thurs	Dec 25, Thurs
Special Non-Working Day	PHL	Dec 26, Fri	Dec 26, Fri
Rizal Day	PHL	Dec 30, Tues	Dec 30, Tues
Last Day of the Year	PHL	Dec 31, Wed	Dec 31, Wed

Any other day designated by Federal Law, Executive Order, or Presidential Proclamation.

(a) When any such day falls on a Saturday or Sunday, the following Monday is observed. Observance of such days by Government personnel shall not be cause for additional period of performance or entitlement to compensation except as set forth in the contract. If the contractor's personnel work on a holiday, no form of holiday or other premium compensation will be reimbursed either as a direct or indirect cost, unless authorized pursuant to an overtime clause elsewhere in this contract.

ATTACHMENT #4

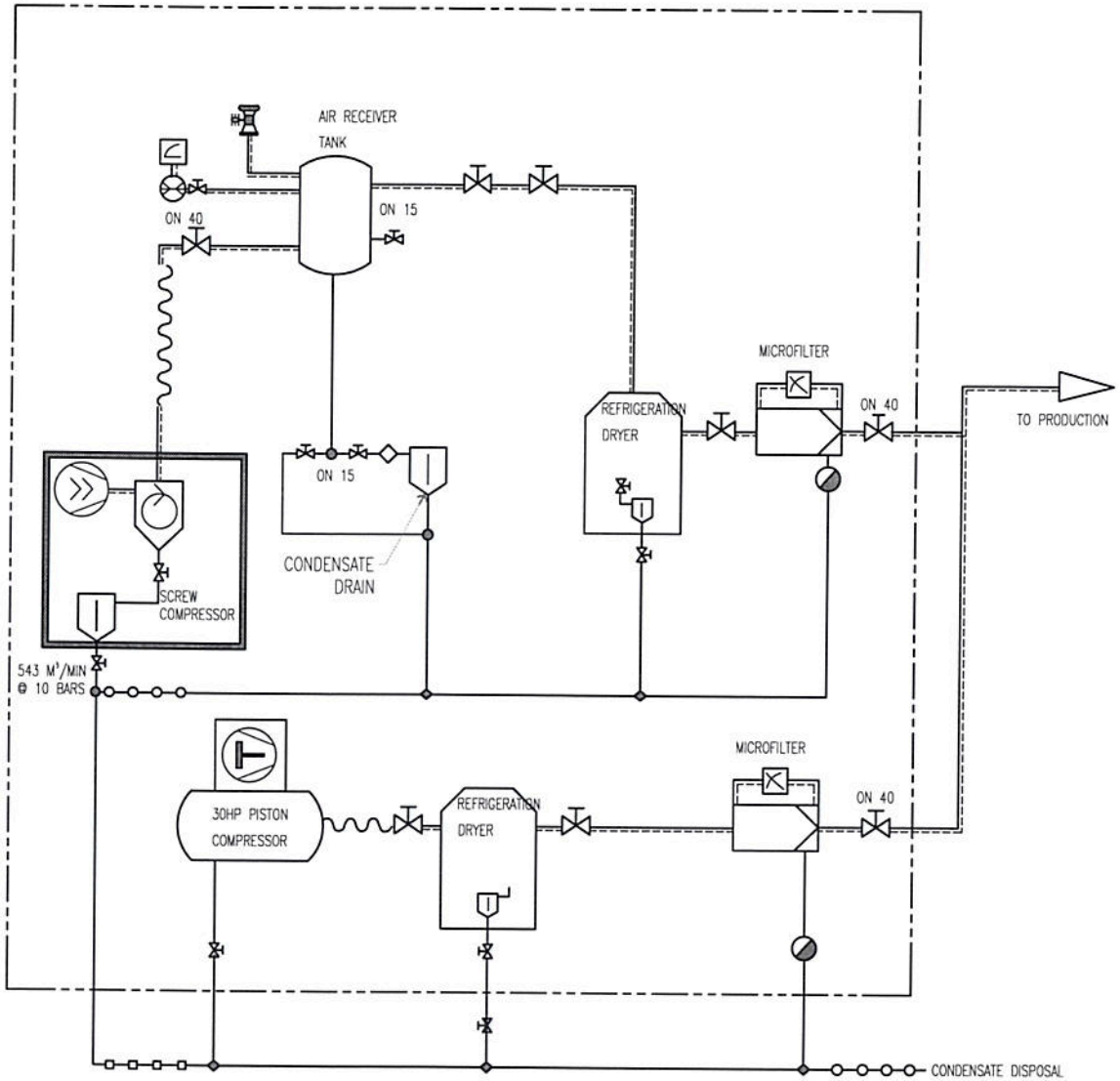

PIPING & INSTRUMENTATION LAYOUT

UNITED STATES EMBASSY
MANILA, PHILIPPINES

FACILITIES MANAGEMENT

WARNING:

SENSITIVE
BUT
UNCLASSIFIED

Approved by:

DISCIPLINE	INITIAL	SIGNATURE	DATE
CTM	SGK		
DFM	RLW		
CHIEF ENG'R	BTD		
ARCH'L	AGB		
CIVIL/STRL	ADM		
ELECT'L	MFF		
MECH'L	BTD		
FMS	MTI		

RevNo	Revision note	Date	Sign.

Project Title:

PIPING & INSTRUMENTATION DIAGRAM

Location:

U.S. EMABASSY,
SEA FRONT COMPOUND

Release For Construction:

Sheet Content:

Phase:

Date: SEPT. 11, 2014

CADD File Name

Designed: Nicole T. Cinco

Drawn By: Nicole T. Cinco

Checked: Antonino Marcelo

Drawing Number:

Project Number:

Sheet Number: A1
Sheet 1 of 1

Contract No.

ATTACHMENT # 5

GENERAL SPECIFICATIONS FOR 50HP AIR COMPRESSOR & AUXILIARIES:

Specification of Screw Compressor

Free Air Delivery ("FAD") at maximum pressure: 5.38 m^3/min or higher

Maximum Pressure: 12 bar(g)

KW rating: 37 kW

Voltage: 460V/3P/60hz +/- 10%

Drive: Direct drive, high-flex coupling, without gearing or belt

Motor Efficiency Class: IE4 (Super premium efficiency)

Lubrication: Oil injected

Internal controller: Industrial computer with Radio Frequency Identification (RFID)
Stores history up to 100 events:
Can set up to 2 pressure settings
Count down timer for maintenance of individual components

Lubrication Temperature Control: Electronic Thermo Management

Motor/Airend Speed: 3570 rpm

Additional Component: With built-in centrifugal separator and electronic condensate drain

Specification of Refrigeration Dryer

Flow rate: 7 m^3/min or higher (rated at +25 °C, inlet temp., +35 °C ambient temp., 7 bar(g) working press)

Pressure dew point: +3 °C

Voltage: 460V/3P/60hz

Power consumption at 100% flow rate: 1.1 kW or lower

Power consumption at 50% flow rate: 0.61 kW or lower

Refrigerant: R134A

Refrigerant Control: Cycling control, refrigeration circuit is activated only when cooling is actually required

Specification of Filter

Air flow at 7 bar(g) referred to 1 bar(a), +20 °C: 4.83 m^3/min

Type : Microfilter/ coalescing

Size of particles removed: >0.1 micron

Maximum fluid load at inlet: 0.1 g/m^3

Specification of Condensate Drain

Max. Compressor FAD for condensate removal according to humid climate : 4 m^3/min provided screw compressor has built-in centrifugal separator and electronic drain, otherwise, it should be 5.38 m^3/min or higher

Type : Level-controlled, electronic

Operating Pressure Min/max: 0.8/16 bar(g)

Voltage: 230V/3P/60hz

Specification of Air Receiver Tank

Type: Vertical

Medium: Compressed Air

Capacity: 2000 L

Max working pressure: 13 bar(g)

Hydrotest pressure: 19.5 bar(g)

Material: A-36 plate, 14 mm thickness

Approx. empty weight: 1100 kgs

Internal surface coating: Red oxide primer

External surface coating: Epoxy primer and finish paint

Accessories: Safety valve, pressure gauge

September 23, 2014

Q&A

Q: The specifications required for the compressor is not available on-stock. I would say that this is also true for most of the compressor brands. We need to order the units from Germany. Also, the Manila port is congested lately. May we request for us to be allowed this schedule:

12~14 weeks delivery of the equipment from issuance of purchase order
3~4 weeks to install the equipment
Total of 18 weeks

A: Refer to revised Section C. 10.1 of Specific Tasks

The contractor guarantees to complete the work within **Fifteen (15) working days** from the date of Notice to Proceed. ***Delivery of equipment is within 12-14 weeks upon receipt of the Purchase Order***

Q: Under the Scope of Works, page 29, C.1.2.6, may we request to submit the specifications of the materials for approval in lieu of the actual sample? We understand that the COR can still reject the actual materials delivered if found not complying with the approved specifications.

A: Yes in lieu of actual sample, materials are acceptable.

Q: On the Technical specification of the air compressor, Maximum Pressure should be 12 bar while the specifications of the Refrigerated dryer, pre-filter and after filter, the working pressure is only 7 Bar. Which Pressure rating should we consider? Can we use 7-8 bar pressure?

A: Please refer to attachment # 5, maximum operating pressure should be 12 bars