AMENDMENT OF SOLICITATION/MODIFICATION OF CONTRACT	1. CONTRACT ID CODE	PAGE OF PAGES 1 5

2. AMENDMENT/MODIFICATION NO.	3. EFFECTIVE DATE	4. REQUISITION/PURCHASE REQ. NO.	5. PROJECT NO. *(If applicable)*
A-002	8/8/2014	PR3503206	

6. ISSUED BY CODE
Contracting & Procurement
General Services Office, American Embassy Manila
Seafront Compound, Roxas Boulevard, Pasay City

7. ADMINISTERED BY *(If other than Item 6)* CODE

8. NAME AND ADDRESS OF CONTRACTOR *(No., street, county, State, and ZIP Code)*

FACILITY CODE

(√) X

9A. AMENDMENT OF SOLICITATION NO. SRP380-14-Q-0089-A002

9B. DATED *(SEE ITEM 11)*

10A. MODIFICATION OF CONTRACT/ORDER NO.

10B. DATED *(SEE ITEM 13)*

11. THIS ITEM ONLY APPLIES TO AMENDMENTS OF SOLICITATIONS

[X] The above numbered solicitation is amended as set forth in Item 14. The hour and date specified for receipt of Offers [X] --Is extended, [ ] is not extended.

Offers must acknowledge receipt of this amendment prior to the hour and date specified in the solicitation or as amended, by one of the following methods:

(a) By completing Items 8 and 15, and returning 1 copies of the amendment; (b) By acknowledging receipt of this amendment on each copy of the offer submitted; of (c) By separate letter of telegram which includes a reference to the solicitation and amendment numbers. FAILURE OF YOUR ACKNOWLEDGEMENT TO BE RECEIVED AT THE PLACE DESIGNATED FOR THE RECEIPT OF OFFERS PRIOR TO THE HOUR AND DATE SPECIFIED MAY RESULT IN REJECTION OF YOUR OFFER. If by virtue of this amendment you desire to change an offer already submitted, such change may be made by telegram or letter, provided each telegram or letter makes reference to the solicitation and this amendment, and is received prior to the opening hour and date specified.

12. ACCOUNTING AND APPROPRIATION DATA *(If required)*

13. THIS ITEM APPLIES ONLY TO MODIFICATIONS OF CONTRACTS/ORDERS, IT MODIFIES THE CONTRACT/ORDER NO. AS DESCRIBED IN ITEM 14.

(√)		
	A.	THIS CHANGE ORDER IS ISSUED PURSUANT TO: *(Specify authority)* THE CHANGES SET FORTH IN ITEM 14 ARE MADE IN THE CONTRACT ORDER NO. IN ITEM 10A.
	B.	THE ABOVE NUMBERED CONTRACT/ORDER IS MODIFIED TO REFLECT THE ADMINISTRATIVE CHANGES *(such as changes in paying office, appropriation date, etc.)* SET FORTH IN ITEM 14, PURSUANT TO THE AUTHORITY OF FAR 43.103(b)
	C.	THIS SUPPLEMENTAL AGREEMENT IS ENTERED INTO PURSUANT TO AUTHORITY OF:
	D.	OTHER *(Specify type of modification and authority)*

E. IMPORTANT: Contractor [X] is not, [ ] is required to sign this document and return ___ copy to the issuing office.

14. DECRIPTION OF AMENDMENT/MODIFICATION *(Organized by UCF section headings, including solicitation/contract subject matter where feasible.)*

SRP380-14-Q-0089 is being amended as follows:

1. To reflect changes and include drawing as part of the attachments. Under List of Attachments Letter I.

ATTACHMENT NUMBER	*DESCRIPTION OF ATTACHMENT*	*NUMBER OF PAGES*
Attachment 1	*Specifications/Scope of Work*	*12*
Attachment 2	*RSO Biographic Data*	*2*
Attachment 3	*Philippine and American Holidays*	*1*
Attachment 4	*Drawing*	*1*

15A. NAME AND TITLE OF SIGNER *(Type of print)*		16A. NAME AND TITLE OF CONTRACTING OFFICER *(Type or Print)* NENITA V. WHITAKER	
15B. CONTRACT/OFFEROR *(Signature of person authorized to sign)*	15C. DATE SIGNED	16B. UNITED STATES OF AMERICA *(Signature of Contracting Officer)*	16C. DATE SIGNED

2. To extend the deadline of submission FROM: August 8, 2014 2:00 PM to August 11. 2014 2:00 PM

3. All other terms and conditions remain unchanged and in full force and effect.

TABLE OF CONTENTS

SF 18

A. Price
B. Scope of Work
C. Packaging and Marking
D. Inspection and Acceptance
E. Deliveries/Performance
F. Administrative Data
G. Special Requirements
H. Clauses
I. List of Attachments
J. Quotation Information
K. Evaluation Criteria
L. Representations, Certifications, and other Statements of Offerors or Quoters

Attachments

Attachment 1: Specifications/Scope of Work
Attachment 2: RSO Biographic Data
Attachment 3: Holiday Schedule
Attachment 4: Drawing

A. PRICE

The Contractor shall complete all work, including furnishing all labor, material, equipment and services required under this purchase order for the following firm fixed price and within the time specified. This price shall include all labor, materials, all insurances, overhead and profit.

_____ Total Price

A.1 VALUE ADDED TAX

The Government will not reimburse the Contractor for VAT under this contract. The Contractor shall not include a line for VAT on Invoices as the U.S. Embassy has a tax exemption certificate with the host government.

B. SCOPE OF WORK

The character and scope of the work are set forth in the contract. The Contractor shall furnish and install all materials required by this contract.

In case of differences between small and large-scale drawings, the latter will govern. Where a portion of the work is drawn in detail and the remainder of the work is indicated in outline, the parts drawn in detail shall apply also to all other portions of the work.

C. PACKAGING AND MARKING

Mark materials delivered to the site as follows:

AMERICAN EMBASSY
MANILA, PHILIPPINES
For: Contract No. (to be completed upon award)

D. INSPECTION AND ACCEPTANCE

The COR, or his/her authorized representatives, will inspect from time to time the services being performed and the supplies furnished to determine whether work is being performed in a satisfactory manner, and that all supplies are of acceptable quality and standards.

The Contractor shall be responsible for any countermeasures or corrective action, within the scope of this contract, which may be required by the Contracting Officer as a result of such inspection.

D.1 Substantial Completion

(a) "*Substantial Completion*" means the stage in the progress of the work as determined and certified by the Contracting Officer in writing to the Contractor, on which the work (or a portion designated by the Government) is sufficiently complete and satisfactory. Substantial completion means that the property may be occupied or used for the purpose for which it is intended, and only minor items such as touch-up, adjustments, and minor replacements or installations remain to be completed or corrected which:

(1) do not interfere with the intended occupancy or utilization of the work, and

(2) can be completed or corrected within the time period required for final completion.

(b) The "date of substantial completion" means the date determined by the Contracting Officer or authorized Government representative as of which substantial completion of the work has been achieved.

Use and Possession upon Substantial Completion - The Government shall have the right to take possession of and use the work upon substantial completion. Upon notice by the Contractor that the work is substantially complete (a Request for Substantial Completion) and an inspection by the Contracting Officer or an authorized Government representative (including any required tests), the Contracting Officer shall furnish the Contractor a Certificate of Substantial Completion. The certificate will be accompanied by a Schedule of Defects listing items of work remaining to be performed, completed or corrected before final completion and acceptance. Failure of the Contracting Officer to list any item of work shall not relieve the Contractor of responsibility for complying with the terms of the contract. The Government's possession or use upon substantial completion shall not be deemed an acceptance of any work under the contract.

D.2 Final Completion and Acceptance

D.2.1 "Final completion and acceptance" means the stage in the progress of the work as determined by the Contracting Officer and confirmed in writing to the Contractor, at which all work required under the contract has been completed in a satisfactory manner,

subject to the discovery of defects after final completion, and except for items specifically excluded in the notice of final acceptance.

D.2.2 The "*date of final completion and acceptance*" means the date determined by the Contracting Officer when final completion of the work has been achieved, as indicated by written notice to the Contractor.

D.2.3 Final Inspection and Tests -The Contractor shall give the Contracting Officer at least five (5) days advance written notice of the date when the work will be fully completed and ready for final inspection and tests. Final inspection and tests will be started not later than the date specified in the notice unless the Contracting Officer determines that the work is not ready for final inspection and so informs the Contractor.

D.2.4 Final Acceptance - If the Contracting Officer is satisfied that the work under the contract is complete (with the exception of continuing obligations), the Contracting upon:

- Satisfactory completion of all required tests,
- A final inspection that all items by the Contracting Officer listed in the Schedule of Defects have been completed or corrected and that the work is finally complete (subject to the discovery of defects after final completion), and
- Submittal by the Contractor of all documents and other items required upon completion of the work, including a final request for payment (Request for Final Acceptance).

E. DELIVERIES OR PERFORMANCE

52.211-10 COMMENCEMENT, PROSECUTION, AND COMPLETION OF WORK
(APR 1984)

The Contractor shall be required to:

(a) commence work under this contract within **five calendar days** after the date the Contractor receives the notice to proceed,
(b) prosecute the work diligently, and,
(c) complete the entire work ready for use not later than ***forty five (45) working days*** after receipt of Notice to Proceed (NTP)

The time stated for completion shall include final cleanup of the premises and completion of punch list items.

52.211-12 LIQUIDATED DAMAGES - CONSTRUCTION (SEP 2000)

(a) If the Contractor fails to complete the work within the time specified in the contract, or any extension, the Contractor shall pay liquidated damages to the Government in the amount of **PHP9,947.20** for each calendar day of delay until the work is completed or accepted.

(b) If the Government terminates the Contractor's right to proceed, liquidated damages will continue to accrue until the work is completed. These liquidated damages are in addition to excess costs of repurchase under the Default clause.

CONTRACTOR'S SUBMISSION OF CONSTRUCTION SCHEDULES

(a) The time for submission of the schedules referenced in FAR 52.236-15, "Schedules for Construction Contracts", paragraph (a), is hereby modified to reflect the due date for submission as **two (2) calendar days** after receipt of an executed contract".

(b) These schedules shall include the time by which shop drawings, product data, samples and other submittals required by the contract will be submitted for approval.

(c) The Contractor shall revise such schedules (1) to account for the actual progress of the work, (2) to reflect approved adjustments in the performance schedule, and (3) as required by the Contracting Officer to achieve coordination with work by the Government and any separate contractors used by the Government. The Contractor shall submit a schedule, which sequences work so as to minimize disruption at the job site.

(d) All deliverables shall be in the English language and any system of dimensions (English or metric) shown shall be consistent with that used in the contract. No extension of time shall be allowed due to delay by the Government in approving such deliverables if the Contractor has failed to act promptly and responsively in submitting its deliverables. The Contractor shall identify each deliverable as required by the contract.

(e) Acceptance of Schedule: When the Government has accepted any time schedule; it shall be binding upon the Contractor. The completion date is fixed and may be extended only by a written contract modification signed by the Contracting Officer. Acceptance or approval of any schedule or revision thereof by the Government shall not:

(1) Extend the completion date or obligate the Government to do so,
(2) Constitute acceptance or approval of any delay, or
(3) Excuse the Contractor from or relieve the Contractor of its obligation to maintain the progress of the work and achieve final completion by the established completion date.

Notice Of Delay

If the Contractor receives a notice of any change in the work, or if any other conditions arise which are likely to cause or are actually causing delays which the Contractor believes may result in late completion of the project, the Contractor shall notify the Contracting Officer. The Contractor's notice shall state the effect, if any, of such change or other conditions upon the approved schedule, and shall state in what respects, if any, the relevant schedule or the completion date should be revised. The Contractor shall give such notice promptly, not more than ten (10) days after the first event giving rise to the delay or prospective delay. Only the Contracting Officer may make revisions to the approved time schedule.

Notice to Proceed

(a) After receiving and accepting any bonds or evidence of insurance, the Contracting Officer will provide the Contractor a Notice to Proceed. The Contractor must then prosecute the work, commencing and completing performance not later than the time period established in the contract.

(b) It is possible that the Contracting Officer may elect to issue the Notice to Proceed before receipt and acceptance of any bonds or evidence of insurance. Issuance of a Notice to Proceed by the Government before receipt of the required bonds or insurance certificates or policies shall not be a waiver of the requirement to furnish these documents.

Working Hours

All work shall be performed during **0730 hours to 1630 hours, from Monday thru Friday, excluding Philippine and American holidays (Attachment 3).** Other hours, if requested by the Contractor, may be approved by the Contracting Officer's Representative (COR). The Contractor shall give 24 hours in advance to COR who will consider any deviation from the hours identified above. Changes in work hours, initiated by the Contractor, will not be a cause for a price increase.

Preconstruction Conference

A preconstruction conference will be held 2 days after contract award at ***the U.S. Embassy Manila, Seafront Compound*** to discuss the schedule, submittals, notice to proceed, mobilization and other important issues that effect construction progress. See FAR 52.236-26, Preconstruction Conference.

Deliverables - The following items shall be delivered under this contract:			
Description	Quantity	Deliver Date	Deliver To
Section G. Securities/Insurance	1	Within 10 days after award	CO
Section E. Construction Schedule	1	Within 2 days after award	COR
Section E. Preconstruction Conference	1	2 days after award	COR

Section G. Personnel Biographies	1	Within 5 days after award	COR
Description	Quantity	Deliver Date	Deliver To
Section F. Payment Request	1	Last calendar day of each month	COR
Section D. Request for Substantial Completion	1	15 days before inspection	COR
Section D. Request for Final Acceptance	1	5 days before inspection	COR

F. ADMINISTRATIVE DATA

652.242-70 CONTRACTING OFFICER'S REPRESENTATIVE (COR) (AUG 1999)

(a) The Contracting Officer may designate in writing one or more Government employees, by name or position title, to take action for the Contracting Officer under this contract. Each designee shall be identified as a Contracting Officer's Representative (COR). Such designation(s) shall specify the scope and limitations of the authority so delegated; provided, that the designee shall not change the terms or conditions of the contract, unless the COR is a warranted Contracting Officer and this authority is delegated in the designation.

(b) The COR for this contract is **Facility Manager**

Payment: The Contractor's attention is directed to Section H, 52.232-5, "Payments Under Fixed-Price Construction Contracts". The following elaborates on the information contained in that clause.

Requests for payment, may be made no more frequently than monthly. Payment requests shall cover the value of labor and materials completed and in place, including a prorated portion of overhead and profit.

After receipt of the Contractor's request for payment, and on the basis of an inspection of the work, the Contracting Officer shall make a determination as to the amount, which is then due. If the Contracting Officer does not approve payment of the full amount applied for, less the retainage allowed by in 52.232-5, the Contracting Officer shall advise the Contractor as to the reasons.

Under the authority of 52.232-27(a), the 14 day period identified in FAR 52.232-27(a)(1)(i)(A) is hereby changed to 30 days.

G. SPECIAL REQUIREMENTS

G.1.0 RESERVED

G.1.1 RESERVED

G.1.2 RESERVED

G.1.3 RESERVED

G.2.0 Insurance - The Contractor is required by FAR 52.228-5, "Insurance - Work on a Government Installation" to provide whatever insurance is legally necessary. The Contractor shall at its own expense provide and maintain during the entire performance period the following insurance amounts:

G.2.1 General Liability (includes premises/operations, collapse hazard, products, completed operations, contractual, independent contractors, broad form property damage, personal injury)

1. Bodily Injury on or off the site stated in Philippine Peso:

Per Occurrence	PHP 50,000.00
Cumulative	PHP 100,000.00

2. Property Damage on or off the site in Philippine Peso:

Per Occurrence	PHP 50,000.00
Cumulative	PHP 100,000.00

G.2.2 The foregoing types and amounts of insurance are the minimums required. The Contractor shall obtain any other types of insurance required by local law or that are ordinarily or customarily obtained in the location of the work. The limit of such insurance shall be as provided by law or sufficient to meet normal and customary claims.

G.2.3 The Contractor agrees that the Government shall not be responsible for personal injuries or for damages to any property of the Contractor, its officers, agents, servants, and employees, or any other person, arising from and incident to the Contractor's performance of this contract. The Contractor shall hold harmless and indemnify the Government from any and all claims arising therefrom, except in the instance of gross negligence on the part of the Government.

G.2.4 The Contractor shall obtain adequate insurance for damage to, or theft of, materials and equipment in insurance coverage for loose transit to the site or in storage on or off the site.

G.2.5 The general liability policy required of the Contractor shall name "the United States of America, acting by and through the Department of State", as an additional

insured with respect to operations performed under this contract.

G.3.0 Document Descriptions

G.3.1 Supplemental Documents: The Contracting Officer shall furnish from time to time such detailed drawings and other information as is considered necessary, in the opinion of the Contracting Officer, to interpret, clarify, supplement, or correct inconsistencies, errors or omissions in the Contract documents, or to describe minor changes in the work not involving an increase in the contract price or extension of the contract time. The Contractor shall comply with the requirements of the supplemental documents, and unless prompt objection is made by the Contractor within 20 days, their issuance shall not provide for any claim for an increase in the Contract price or an extension of contract time.

G.3.1.1. Record Documents. The Contractor shall maintain at the project site:

(1) a current marked set of Contract drawings and specifications indicating all interpretations and clarification, contract modifications, change orders, or any other departure from the contract requirements approved by the Contracting Officer; and,
(2) a complete set of record shop drawings, product data, samples and other submittals as approved by the Contracting Officer.

G.3.1.2. RESERVED

G.4.0 Laws and Regulations - The Contractor shall, without additional expense to the Government, be responsible for complying with all laws, codes, ordinances, and regulations applicable to the performance of the work, including those of the host country, and with the lawful orders of any governmental authority having jurisdiction. Host country authorities may not enter the construction site without the permission of the Contracting Officer. Unless otherwise directed by the Contracting Officer, the Contractor shall comply with the more stringent of the requirements of such laws, regulations and orders and of the contract. In the event of a conflict between the contract and such laws, regulations and orders, the Contractor shall promptly advise the Contracting Officer of the conflict and of the Contractor's proposed course of action for resolution by the Contracting Officer.

G.4.1 The Contractor shall comply with all local labor laws, regulations, customs and practices pertaining to labor, safety, and similar matters, to the extent that such compliance is not inconsistent with the requirements of this contract.

G.4.2 The Contractor shall give written assurance to the Contracting Officer that all subcontractors and others performing work on or for the project have obtained all requisite licenses and permits.

G.4.3 The Contractor shall submit proper documentation and evidence satisfactory to the Contracting Officer of compliance with this clause.

G.5.0 Construction Personnel - The Contractor shall maintain discipline at the site and at all times take all reasonable precautions to prevent any unlawful, riotous, or disorderly conduct by or among those employed at the site. The Contractor shall ensure the preservation of peace and protection of persons and property in the neighborhood of the project against such action. The Contracting Officer may require, in writing that the Contractor remove from the work any employee that the Contracting Officer deems incompetent, careless, insubordinate or otherwise objectionable, or whose continued employment on the project is deemed by the Contracting Officer to be contrary to the Government's interests.

G.5.1 If the Contractor has knowledge that any actual or potential labor dispute is delaying or threatens to delay the timely performance of this contract, the Contractor shall immediately give notice, including all relevant information, to the Contracting Officer.

G.5.2 After award, the Contractor has ten calendar days to submit to the Contracting Officer a list of workers and supervisors assigned to this project for the Government to conduct all necessary security checks. It is anticipated that security checks will take twenty-one (21) days to perform. For each individual the list shall include:

Full Name
Place and Date of Birth
Current Address
Identification number
Completed RSO biographic data from for each personnel **(Attachment 2)**
2 pcs. 2"x2" black and white ID picture
Original copy of NBI clearance (not more than 6 months old)

Failure to provide any of the above information may be considered grounds for rejection and/or resubmittal of the application. Once the Government has completed the security screening and approved the applicants a badge will be provided to the individual for access to the site. This badge may be revoked at any time due to the falsification of data, or misconduct on site.

G.5.3 The Contractor shall provide an English speaking supervisor on site at all times. This position is considered as key personnel under this purchase order.

G.6.0 Materials and Equipment - All materials and equipment incorporated into the work shall be new and for the purpose intended, unless otherwise specified. All workmanship shall be of good quality and performed in a skillful manner that will withstand inspection by the Contracting Officer.

G.7.0 Special Warranties

G.7.1 Any special warranties that may be required under the contract shall be subject to the stipulations set forth in 52.246-21, "Warranty of Construction", as long as they are not in conflict.

G.7.2 The Contractor shall obtain and furnish to the Government all information required to make any subcontractor's, manufacturer's, or supplier's guarantee or warranty legally binding and effective. The contractor shall submit both the information and the guarantee or warranty to the Government in sufficient time to permit the Government to meet any time limit specified in the guarantee or warranty, but not later than completion and acceptance of all work under this contract.

G.8.0 Equitable Adjustments

Any circumstance for which the contract provides an equitable adjustment that causes a change within the meaning of paragraph (a) of the "Changes" clause shall be treated as a change under that clause; provided, that the Contractor gives the Contracting Officer prompt written notice (within 20 days) stating:

(a) the date, circumstances, and applicable contract clause authorizing an equitable adjustment and
(b) that the Contractor regards the event as a changed condition for which an equitable adjustment is allowed under the contract

The Contractor shall provide written notice of a differing site condition within 10 calendar days of occurrence following FAR 52.236-2, Differing Site Conditions.

G.9.0 RESERVED

H. CLAUSES

This contract incorporates one or more clauses by reference, with the same force and effect as if they were given in full text. Upon request, the Contracting Officer will make their full text available. Also, the full text of a clause may be accessed electronically at this/these address(es): *http://www.acquisition.gov/far/* or *http://farsite.hill.af.mil/vffara.htm*. Please note these addresses are subject to change.

If the Federal Acquisition Regulation (FAR) is not available at the locations indicated above, use the Department of State Acquisition website at *http://www.statebuy.state.gov/* to access links to the FAR. You may also use an internet "search engine" (for example, Google, Yahoo, Excite) to obtain the latest location of the most current FAR.

The following Federal Acquisition Regulation clause(s) is/are incorporated by reference (48 CFR CH. 1):

CLAUSE	TITLE AND DATE
52.202-1	DEFINITIONS (NOV 2013)
52.204-9	PERSONAL VERIFICATION OF CONTRACTOR PERSONNEL (JAN 2011)

52.204-10	REPORTING EXECUTIVE COMPENSATION AND FIRST-TIER SUBCONTRACT AWARDS (JUL 2013)
52.204-12	DATA UNIVERSAL NUMBERING SYSTEM NUMBER MAINTENANCE (DEC 2012)
52.204-13	SYSTEM FOR AWARD MANAGEMENT MAINTENANCE (JUL 2013)
52.209-6	PROTECTING THE GOVERNMENT'S INTEREST WHEN SUBCONTRACTING WITH CONTRACTORS DEBARRED, SUSPENDED OR PROPOSED FOR DEBARMENT (AUG 2013)
52.209-9	UPDATES OF INFORMATION REGARDING RESPONSIBILITY MATTERS (JUL 2013)
52.213-4	TERMS AND CONDITIONS –SIMPLIFIED ACQUISITIONS (OTHER THAN COMMERCIAL ITEMS) (NOV 2013)
52.216-7	ALLOWABLE COST AND PAYMENT (JUNE 2013)
52.222-1	NOTICE TO THE GOVERNMENT OF LABOR DISPUTES (FEB 1997)
52.222-19	CHILD LABOR – COOPERATION WITH AUTHORITIES AND REMEDIES (JAN 2014)
52.222-27	PROMPT PAYMENT CONSTRUCTION (JUL 2013)
52.222-50	COMBATING TRAFFICKING IN PERSONS (FEB 2009)
52.223-18	ENCOURAGING CONTRACTOR POLICIES TO BAN TEXT MESSAGING WHILE DRIVING (AUG 2011)
52.225-13	RESTRICTIONS ON CERTAIN FOREIGN PURCHASES (JUNE 2008)
52.225-14	INCONSISTENCY BETWEEN ENGLISH VERSION AND TRANSLATION OF CONTRACT (FEB 2000)
52.228-5	INSURANCE - WORK ON A GOVERNMENT INSTALLATION (JAN 1997)
52.228-11	PLEDGES OF ASSETS (JAN 2012)
52.228-13	ALTERNATIVE PAYMENT PROTECTION (JUL 2000)
52.229-6	TAXES - FOREIGN FIXED-PRICE CONTRACTS (FEB 2013)
52.229-7	TAXES- FIXED PRICE CONTRACTS WITH FOREIGN GOVERNMENTS (FEB 2013)
52.232-5	PAYMENTS UNDER FIXED-PRICE CONSTRUCTION CONTRACTS (SEP 2002)
52.232-8	DISCOUNTS FOR PROMPT PAYMENT (FEB 2002)
52.232-11	EXTRAS (APR 1984)

52.232-18	AVAILABILITY OF FUNDS (APR 1984)
52.232-22	LIMITATION OF FUNDS (APR 1984)
52.232-24	PROHIBITION OF ASSIGNMENT OF CLAIMS (JAN 1986)
52.232-25	PROMPT PAYMENT (JUL 2013)
52.232-27	PROMPT PAYMENT FOR CONSTRUCTION CONTRACTS (JUL 2013)
52.232-33	PAYMENT BY ELECTRONIC FUNDS TRANSFER - SYSTEM FOR AWARD MANAGEMENT (JUL 2013)
52.232-34	PAYMENT BY ELECTRONIC FUNDS TRANSFER – OTHER THAN SYSTEM FOR AWARD MANAGEMENT (JUL 2013)
52.233-1	DISPUTES (JULY 2002) *Alternate I (DEC 1991)*
52.233-3	PROTEST AFTER AWARD (AUG 1996)
52.236-2	DIFFERING SITE CONDITIONS (APR 1984)
52.236-3	SITE INVESTIGATION AND CONDITIONS AFFECTING THE WORK (APR 1984)
52.236-5	MATERIAL AND WORKMANSHIP (APR 1984)
52.236-6	SUPERINTENDENCE BY THE CONTRACTOR (APR 1984)
52.236-7	PERMITS AND RESPONSIBILITIES (NOV 1991)
52.236-8	OTHER CONTRACTS (APR 1984)
52.236-9	PROTECTION OF EXISTING VEGETATION, STRUCTURES, EQUIPMENT, UTILITIES, AND IMPROVEMENTS (APR 1984)
52.236-10	OPERATIONS AND STORAGE AREAS (APR 1984)
52.236-11	USE AND POSSESSION PRIOR TO COMPLETION (APR 1984)
52.236-12	CLEANING UP (APR 1984)
52.236-14	AVAILABILITY AND USE OF UTILITY SERVICES (APR 1984)
52.236-15	SCHEDULES FOR CONSTRUCTION CONTRACTS (APR 1984)
52.236-21 1997)	SPECIFICATIONS AND DRAWINGS FOR CONSTRUCTION (FEB
52.236-26	PRECONSTRUCTION CONFERENCE (FEB 1995)
52.242-14	SUSPENSION OF WORK (APR 1984)

52.243-4 CHANGES (JUNE 2007)

52.243-5 CHANGES AND CHANGED CONDITIONS (APR 1984)

52.244-6 SUBCONTRACTS FOR COMMERCIAL ITEMS (DEC 2013)

52.245-2 GOVERNMENT PROPERTY INSTALLATION OPERATION SERVICES (APR 2012)

52.245-9 USE AND CHARGES (APR 2012)

52.246-12 INSPECTION OF CONSTRUCTION (AUG 1996)

52.246-17 WARRANTY OF SUPPLIES OF A NONCOMPLEX NATURE (JUNE 2003)

52.246-21 WARRANTY OF CONSTRUCTION (MAR 1994)

52.249-2 TERMINATION FOR CONVENIENCE OF THE GOVERNMENT (FIXED-PRICE) (APR 2012) *Alternate I (SEP 1996)*

52.249-10 DEFAULT (FIXED-PRICE CONSTRUCTION) (APR 1984)

52.249-14 EXCUSABLE DELAYS (APR 1984)

The following Department of State Acquisition Regulation (DOSAR) clause(s) is/are set forth in full text:

652.204-70 DEPARTMENT OF STATE PERSONAL IDENTIFICATION CARD ISSUANCE PROCEDURES (MAY 2011)

(a) The Contractor shall comply with the Department of State (DOS) Personal Identification Card Issuance Procedures for all employees performing under this contract who require frequent and continuing access to DOS facilities, or information systems. The Contractor shall insert this clause in all subcontracts when the subcontractor's employees will require frequent and continuing access to DOS facilities, or information systems.

(b) The DOS Personal Identification Card Issuance Procedures may be accessed at *http://www.state.gov/m/ds/rls/rpt/c21664.htm* .

(End of clause)

CONTRACTOR IDENTIFICATION (JULY 2008)

Contract performance may require contractor personnel to attend meetings with government personnel and the public, work within government offices, and/or utilize government email.

Contractor personnel must take the following actions to identify themselves as non-federal employees:

1) Use an e-mail signature block that shows name, the office being supported and company affiliation (e.g. "John Smith, Office of Human Resources, ACME Corporation Support Contractor");
2) Clearly identify themselves and their contractor affiliation in meetings;
3) Identify their contractor affiliation in Departmental e-mail and phone listings whenever contractor personnel are included in those listings; and
4) Contractor personnel may not utilize Department of State logos or indicia on business cards.

(End of clause)

652.236-70 ACCIDENT PREVENTION (APR 2004)

(a) *General*. The Contractor shall provide and maintain work environments and procedures which will safeguard the public and Government personnel, property, materials, supplies, and equipment exposed to contractor operations and activities; avoid interruptions of Government operations and delays in project completion dates; and, control costs in the performance of this contract. For these purposes, the Contractor shall:

(1) Provide appropriate safety barricades, signs and signal lights;

(2) Comply with the standards issued by any local government authority having jurisdiction over occupational health and safety issues; and,

(3) Ensure that any additional measures the Contracting Officer determines to be reasonably necessary for this purpose are taken.

(4) For overseas construction projects, the Contracting Officer shall specify in writing additional requirements regarding safety if the work involves:

(i) Scaffolding;

(ii) Work at heights above two (2) meters;

(iii) Trenching or other excavation greater than one (1) meter in depth;

(iv) Earth moving equipment;

(v) Temporary wiring, use of portable electric tools, or other recognized electrical hazards. Temporary wiring and portable electric tools require the use of a ground fault circuit interrupter (GFCI) in the affected circuits; other electrical hazards may also require the use of a GFCI;

(vi) Work in confined spaces (limited exits, potential for oxygen less that 19.5 percent or combustible atmosphere, potential for solid or liquid engulfment, or other hazards considered to be immediately dangerous to life or health such as water tanks, transformer vaults, sewers, cisterns, etc.);

(vii) Hazardous materials – a material with a physical or health hazard including but not limited to, flammable, explosive, corrosive, toxic, reactive or unstable, or any operations which creates any kind of contamination inside an occupied building such as dust from demolition activities, paints, solvents, etc.; or

(viii) Hazardous noise levels.

(b) *Records*. The Contractor shall maintain an accurate record of exposure data on all accidents incident to work performed under this contract resulting in death,

traumatic injury, occupational disease, or damage to or theft of property, materials, supplies, or equipment. The Contractor shall report this data in the manner prescribed by the Contracting Officer.

(c) *Subcontracts.* The Contractor shall be responsible for its subcontractors' compliance with this clause.

(d) *Written program.* Before commencing work, the Contractor shall:

(1) Submit a written plan to the Contracting Officer for implementing this clause. The plan shall include specific management or technical procedures for effectively controlling hazards associated with the project; and,

(2) Meet with the Contracting Officer to discuss and develop a mutual understanding relative to administration of the overall safety program.

(e) *Notification.* The Contracting Officer shall notify the Contractor of any non-compliance with these requirements and the corrective actions required. This notice, when delivered to the Contractor or the Contractor's representative on site, shall be deemed sufficient notice of the non-compliance and corrective action required. After receiving the notice, the Contractor shall immediately take corrective action. If the Contractor fails or refuses to promptly take corrective action, the Contracting Officer may issue an order suspending all or part of the work until satisfactory corrective action has been taken. The Contractor shall not be entitled to any equitable adjustment of the contract price or extension of the performance schedule on any suspension of work order issued under this clause.

(End of clause)

652.242-73 AUTHORIZATION AND PERFORMANCE (AUG 1999)

(a) The Contractor warrants the following:

(1) That is has obtained authorization to operate and do business in the country or countries in which this contract will be performed;

(2) That is has obtained all necessary licenses and permits required to perform this contract; and,

(3) That it shall comply fully with all laws, decrees, labor standards, and regulations of said country or countries during the performance of this contract.

(b) If the party actually performing the work will be a subcontractor or joint venture partner, then such subcontractor or joint venture partner agrees to the requirements of paragraph (a) of
this clause.

652.243-70 NOTICES (AUG 1999)

Any notice or request relating to this contract given by either party to the other shall be in writing. Said notice or request shall be mailed or delivered by hand to the other party at the address provided in the schedule of the contract. All modifications to the contract must be made in writing by the Contracting Officer.

652.229-71 PERSONAL PROPERTY DISPOSITION AT POSTS ABROAD (AUG 1999)

Regulations at 22 CFR Part 136 require that U.S. Government employees and their families do not profit personally from sales or other transactions with persons who are not themselves entitled to exemption from import restrictions, duties, or taxes. Should the Contractor experience importation or tax privileges in a foreign country because of its contractual relationship to the United States Government, the Contractor shall observe the requirements of 22 CFR Part 136 and all policies, rules, and procedures issued by the chief of mission in that foreign country.

I. LIST OF ATTACHMENTS

ATTACHMENT NUMBER	DESCRIPTION OF ATTACHMENT	NUMBER OF PAGES
Attachment 1	Specifications/Scope of Work	12
Attachment 2	RSO Biographic Data	2
Attachment 3	Philippine and American Holidays	1
Attachment 4	Drawing	1

A00

J. QUOTATION INFORMATION

A. QUALIFICATIONS OF OFFERORS

Offerors/quoters must be technically qualified and financially responsible to perform the work described in this solicitation. At a minimum, each Offeror/Quoter must meet the following requirements:

(1) Be able to understand written and spoken English;
(2) Have an established business with a permanent address and telephone listing;
(3) Be able to demonstrate prior construction experience with suitable references;
(4) Have the necessary personnel, equipment and financial resources available to perform the work;
(5) Have all licenses and permits required by local law;
(6) Meet all local insurance requirements;
(7) Have the ability to obtain or to post adequate performance security, such as bonds, irrevocable letters of credit or guarantees issued by a reputable financial institution;
(8) Have no adverse criminal record; and
(9) Have no political or business affiliation which could be considered contrary to the interests of the United States.
(10) Should be accredited by Trane Philippines

B. SUBMISSION OF QUOTATIONS

This solicitation is for the performance of the construction services described in SCOPE OF WORK, and the Attachments which are a part of this request for quotation.

Each quotation must consist of the following:		
Volume	Title	Number of Copies*
I	Standard Form 18 (SF18) including a completed Section A, "PRICE", and a completed Section L, "REPRESENTATIONS AND CERTIFICATIONS".	2
II	Performance schedule in the form of a "bar chart" and Business Management/Technical Proposal	4

Submit the complete quotation to the address indicated. If mailed, on Standard Form 18, or if hand-delivered, use the address set forth below.

CONTRACTING & PROCUREMENT (C&P)
General Services Office (GSO)
American Embassy Manila
Seafront Compound, Roxas Boulevard
Pasay City 1300

The Offeror/Quoter shall identify and explain/justify any deviations, exceptions, or conditional assumptions taken with respect to any of the instructions or requirements of this request for quotation in the appropriate volume of the offer.

Volume II: Performance schedule and Business Management/Technical Proposal.

(a) Present the performance schedule in the form of a "bar chart" indicating when the various portions of the work will be commenced and completed within the required schedule. This bar chart shall be in sufficient detail to clearly show each segregable portion of work and its planned commencement and completion date.

(b) The Business Management/Technical Proposal shall be in two parts, including the following information:

Proposed Work Information - Provide the following:

(1) A list of the names, addresses and telephone numbers of the owners, partners, and principal officers of the Offeror;

(2) The name and address of the Offeror's field superintendent for this project;

(3) A list of the names, addresses, and telephone numbers of subcontractors and principal materials suppliers to be used on the project, indicating what portions of the work will be performed by them; and,

Experience and Past Performance - List all contracts and subcontracts your company has held over the past three years for the same or similar work. Provide the following information for each contract and subcontract:

(1) Customer's name, address, and telephone numbers of customer's lead contract and technical personnel;

(2) Contract number and type;

(3) Date of the contract award place(s) of performance, and completion dates; Contract dollar value;

(4) Brief description of the work, including responsibilities; and

(5) Any litigation currently in process or occurring within last 5 years.

(6) Any document from TRANE as proof of recognition.

C. 52.236-27 SITE VISIT (CONSTRUCTION) (FEB 1995)

(a) The clauses at 52.236-2, Differing Site Conditions, and 52.236-3, Site Investigations and Conditions Affecting the Work, will be included in any contract awarded as a result of this solicitation. Accordingly, offerors or quoters are urged and expected to inspect the site where the work will be performed.

(b) A site visit has been scheduled for **Thursday, 24 July, 2014 at 9:00 AM.**

(c) Participants will meet at ***Roxas Boulevard Gate, Seafront Compound Pasay City.***

D. MAGNITUDE OF CONSTRUCTION PROJECT

It is anticipated that the range in price of this contract will be: between PHP1,125,000 and PHP4,500,000

E. LATE QUOTATIONS. Late quotations shall be handled in accordance with FAR.

F. 52.252-1 SOLICITATION PROVISIONS INCORPORATED BY REFERENCE (FEB 1998)

This contract incorporates the following provisions by reference, with the same force and effect as if they were given in full text. Upon request, the Contracting Officer will make their full text available. The offeror is cautioned that the listed provisions may include blocks that must be completed by the offeror and submitted with its quotation or offer. In lieu of submitting the full text of those provisions, the offeror may identify the provision by paragraph identifier and provide the appropriate information with its quotation or offer. Also, the full text of a solicitation provision may be accessed electronically at: *http://acquisition.gov/far/index.html/* or *http://farsite.hill.af.mil/vffara.htm*. Please note these addresses are subject to change.

If the Federal Acquisition Regulation (FAR) is not available at the locations indicated above, use the Department of State Acquisition website at http://www.statebuy.state.gov to access the link to the FAR, or use of an Internet "search engine" (for example, Google, Yahoo or Excite) is suggested to obtain the latest location of the most current FAR.

The following Federal Acquisition Regulation provisions are incorporated by reference (48 CFR CH. 1):

PROVISION	TITLE AND DATE
52.204-6	DATA UNIVERSAL NUMBERING SYSTEM (DUNS) NUMBER (JUL 2013)
52.204-7	SYSTEM FOR AWARD MANAGEMENT (JUL 2013)
52.214-34	SUBMISSION OF OFFERS IN THE ENGLISH LANGUAGE (APR 1991)
52.215-1	INSTRUCTIONS TO OFFERORS--COMPETITIVE ACQUISITION (JAN 2004)

K. EVALUATION CRITERIA

Award will be made to the lowest priced, acceptable, responsible quoter. The Government reserves the right to reject quotations that are unreasonably low or high in price.

The Government will determine acceptability by assessing the offeror's compliance with the terms of the RFQ. The Government will determine responsibility by analyzing whether the apparent successful quoter complies with the requirements of FAR 9.1, including:

- ability to comply with the required performance period, taking into consideration all existing commercial and governmental business commitments;
- satisfactory record of integrity and business ethics;
- necessary organization, experience, and skills or the ability to obtain them;
- necessary equipment and facilities or the ability to obtain them; and
- otherwise qualified and eligible to receive an award under applicable laws and regulations.

SECTION L - REPRESENTATIONS, CERTIFICATIONS AND OTHER STATEMENTS OF OFFERORS OR QUOTERS

L.1 52.204-3 TAXPAYER IDENTIFICATION (OCT 1998)

(a) Definitions

"Common parent", as used in this provision, means that corporate entity that owns or controls an affiliated group of corporations that files its Federal income tax returns on a consolidated basis, and of which the offeror is a member.
"Taxpayer Identification Number (TIN)", as used in this provision, means the number required by the IRS to be used by the offeror in reporting income tax and other returns. The TIN may be either a Social Security Number or an Employer Identification Number.

(b) All offerors must submit the information required in paragraphs (d)through (f) of this provision in order to comply with debt collection requirements of 31 U.S.C. 7701(c) and 3325 (d), reporting requirements of 26 USC 6041, 6041A, and 6050M and implementing regulations issued by the Internal Revenue Service (IRS). If the resulting contract is subject to the reporting requirements described in FAR 4.904, the failure or refusal by the offeror to furnish the information may result in a 31 percent reduction of payments otherwise due under the contract.

(c) The TIN may be used by the Government to collect and report on any delinquent amounts arising out of the offeror's relationship with the Government (31 USC 7701(c)(3)). If the resulting contract is subject to the payment reporting requirements described in FAR 4.904, the TIN provided hereunder may be matched with IRS records to verify the accuracy of the offeror's TIN.

(d) Taxpayer Identification Number (TIN)

TIN:	
	TIN has been applied for
	TIN is not required because:
	Offeror is a nonresident alien, foreign corporation, or foreign partnership that does not have income effectively connected with the conduct of a trade or business in the U.S. and does not have an office or place of business or a fiscal paying agent in the U.S.
	Offeror is an agency or instrumentality of a foreign government
	Offeror is an agency or instrumentality of the Federal Government

(e) Type of Organization

	Sole Proprietorship
	Partnership
	Corporate Entity (not tax exempt)
	Corporate Entity (tax exempt)
	Government entity (Federal, State or local)
	Foreign Government
	International organization per 26 CFR 1.6049-4

	Other:

(f) Common Parent

	Offeror is not owned or controlled by a common parent as defined in paragraph (a) of this clause.
	Name and TIN of common parent
Name	
TIN	

(End of provision)

L.2 52.204-8 ANNUAL REPRESENTATIONS AND CERTIFICATIONS (JAN 2014)

(a)(1) The North American Industry Classification System (NAICS) code(s) for this acquisition is/are:

236118 - Construction Management, residential remodeling
236220 - Construction Management, commercial and institutional building or Warehouse construction
237110 - Construction Management, water and sewage line and related structures
237310 - Construction Management, highway road, street or bridge
237990 - Construction Management, outdoor recreation facility

(2) The small business size standard is **$33.5 Million USD**.

(3) The small business size standard for a concern which submits an offer in its own name, other than on a construction or service contract, but which proposes to furnish a product which it did not itself manufacture, is 500 employees.

(b)(1) If the provision at 52.204-7, System for Award Management, is included in this solicitation, paragraph (d) of this provision applies.

(2) If the provision at 52.204-7 is not included in this solicitation, and the offeror is currently registered in the System for Award Management (SAM), and has completed the Representations and Certifications section of SAM electronically, the offeror may choose to use paragraph (d) of this provision instead of completing the corresponding individual representations and certifications in the solicitation. The offeror shall indicate which option applies by checking one of the following boxes:

[ ] (i) Paragraph (d) applies.

[ ] (ii) Paragraph (d) does not apply and the offeror has completed the individual representations and certifications in the solicitation.

(c)(1) The following representations or certifications in SAM are applicable to this solicitation as indicated:

(i) 52.203-2, Certificate of Independent Price Determination. This provision applies to solicitations when a firm-fixed-price contract or fixed-price contract with economic price adjustment is contemplated, unless—

(A) The acquisition is to be made under the simplified acquisition procedures in Part 13;

(B) The solicitation is a request for technical proposals under two-step sealed bidding procedures; or

(C) The solicitation is for utility services for which rates are set by law or regulation.

(ii) 52.203-11, Certification and Disclosure Regarding Payments to Influence Certain Federal Transactions. This provision applies to solicitations expected to exceed $150,000.

(iii) 52.204-3, Taxpayer Identification. This provision applies to solicitations that do not include the provision at 52.204-7, System for Award Management.

(iv) 52.204-5, Women-Owned Business (Other Than Small Business). This provision applies to solicitations that—

(A) Are not set aside for small business concerns;

(B) Exceed the simplified acquisition threshold; and

(C) Are for contracts that will be performed in the United States or its outlying areas.

(v) 52.209-2, Prohibition on Contracting with Inverted Domestic Corporations—Representation. This provision applies to solicitations using funds appropriated in fiscal years 2008, 2009, 2010, or 2012.

(vi) 52.209-5, Certification Regarding Responsibility Matters. This provision applies to solicitations where the contract value is expected to exceed the simplified acquisition threshold.

(vii) 52.214-14, Place of Performance—Sealed Bidding. This provision applies to invitations for bids except those in which the place of performance is specified by the Government.

(viii) 52.215-6, Place of Performance. This provision applies to solicitations unless the place of performance is specified by the Government.

(ix) 52.219-1, Small Business Program Representations (Basic & Alternate I). This provision applies to solicitations when the contract will be performed in the United States or its outlying areas.

(A) The basic provision applies when the solicitations are issued by other than DoD, NASA, and the Coast Guard.

(B) The provision with its Alternate I applies to solicitations issued by DoD, NASA, or the Coast Guard.

(x) 52.219-2, Equal Low Bids. This provision applies to solicitations when contracting by sealed bidding and the contract will be performed in the United States or its outlying areas.

(xi) 52.222-22, Previous Contracts and Compliance Reports. This provision applies to solicitations that include the clause at 52.222-26, Equal Opportunity.

(xii) 52.222-25, Affirmative Action Compliance. This provision applies to solicitations, other than those for construction, when the solicitation includes the clause at 52.222-26, Equal Opportunity.

(xiii) 52.222-38, Compliance with Veterans' Employment Reporting Requirements. This provision applies to solicitations when it is anticipated the contract award will exceed the simplified acquisition threshold and the contract is not for acquisition of commercial items.

(xiv) 52.223-1, Biobased Product Certification. This provision applies to solicitations that require the delivery or specify the use of USDA–designated items; or

include the clause at 52.223-2, Affirmative Procurement of Biobased Products Under Service and Construction Contracts.

(xv) 52.223-4, Recovered Material Certification. This provision applies to solicitations that are for, or specify the use of, EPA–designated items.

(xvi) 52.225-2, Buy American Act Certificate. This provision applies to solicitations containing the clause at 52.225-1.

(xvii) 52.225-4, Buy American Act—Free Trade Agreements—Israeli Trade Act Certificate. (Basic, Alternates I, II, and III.) This provision applies to solicitations containing the clause at 52.225-3.

(A) If the acquisition value is less than $25,000, the basic provision applies.

(B) If the acquisition value is $25,000 or more but is less than $50,000, the provision with its Alternate I applies.

(C) If the acquisition value is $50,000 or more but is less than $79,507, the provision with its Alternate II applies.

(D) If the acquisition value is $79,507 or more but is less than $100,000, the provision with its Alternate III applies.

(xviii) 52.225-6, Trade Agreements Certificate. This provision applies to solicitations containing the clause at 52.225-5.

(xix) 52.225-20, Prohibition on Conducting Restricted Business Operations in Sudan—Certification. This provision applies to all solicitations.

(xx) 52.225-25, Prohibition on Contracting with Entities Engaging in Certain Activities or Transactions Relating to Iran-Representation and Certifications. This provision applies to all solicitations.

(xxi) 52.226-2, Historically Black College or University and Minority Institution Representation. This provision applies to—

(A) Solicitations for research, studies, supplies, or services of the type normally acquired from higher educational institutions; and

(B) For DoD, NASA, and Coast Guard acquisitions, solicitations that contain the clause at 52.219-23, Notice of Price Evaluation Adjustment for Small Disadvantaged Business Concerns.

(2) The following certifications are applicable as indicated by the Contracting Officer:

[*Contracting Officer check as appropriate.*]

__ (i) 52.219-22, Small Disadvantaged Business Status.

__ (A) Basic.

__ (B) Alternate I.

__ (ii) 52.222-18, Certification Regarding Knowledge of Child Labor for Listed End Products.

__ (iii) 52.222-48, Exemption from Application of the Service Contract Act to Contracts for Maintenance, Calibration, or Repair of Certain Equipment Certification.

__ (iv) 52.222-52, Exemption from Application of the Service Contract Act to Contracts for Certain Services–Certification.

__ (v) 52.223-9, with its Alternate I, Estimate of Percentage of Recovered Material Content for EPA–Designated Products (Alternate I only).

__ (vi) 52.227-6, Royalty Information.

__ (A) Basic.

(B) Alternate I.

__ (vii) 52.227-15, Representation of Limited Rights Data and Restricted Computer Software.

(d) The offeror has completed the annual representations and certifications electronically via the SAM website accessed through https://www.acquisition.gov. After reviewing the SAM database information, the offeror verifies by submission of the offer that the representations and certifications currently posted electronically that apply to this solicitation as indicated in paragraph (c) of this provision have been entered or updated within the last 12 months, are current, accurate, complete, and applicable to this solicitation (including the business size standard applicable to the NAICS code referenced for this solicitation), as of the date of this offer and are incorporated in this offer by reference (see FAR 4.1201); except for the changes identified below [*offeror to insert changes, identifying change by clause number, title, date*]. These amended representation(s) and/or certification(s) are also incorporated in this offer and are current, accurate, and complete as of the date of this offer.

FAR CLAUSE #	TITLE	DATE	CHANGE
_____	_____	_____	_____

Any changes provided by the offeror are applicable to this solicitation only, and do not result in an update to the representations and certifications posted on SAM.

(End of provision)

L.3. 52.225-18 PLACE OF MANUFACTURE (SEPT 2006)

(a) *Definitions*. As used in this clause—

" Manufactured end product" means any end product in Federal Supply Classes (FSC) 1000-9999, except—

(1) FSC 5510, Lumber and Related Basic Wood Materials;
(2) Federal Supply Group (FSG) 87, Agricultural Supplies;
(3) FSG 88, Live Animals;
(4) FSG 89, Food and Related Consumables;
(5) FSC 9410, Crude Grades of Plant Materials;
(6) FSC 9430, Miscellaneous Crude Animal Products, Inedible;
(7) FSC 9440, Miscellaneous Crude Agricultural and Forestry Products;
(8) FSC 9610, Ores;
(9) FSC 9620, Minerals, Natural and Synthetic; and
(10) FSC 9630, Additive Metal Materials.

"Place of manufacture" means the place where an end product is assembled out of components, or otherwise made or processed from raw materials into the finished product that is to be provided to the Government. If a product is disassembled and reassembled, the place of reassembly is not the place of manufacture.

(b) For statistical purposes only, the offeror shall indicate whether the place of manufacture of the end products it expects to provide in response to this solicitation is predominantly—

(1) [ ] In the United States (Check this box if the total anticipated price of offered end products manufactured in the United States exceeds the total anticipated price of offered end products manufactured outside the United States); or

(2) [ ] Outside the United States.

(End of provision)

L.4 AUTHORIZED CONTRACT ADMINISTRATOR

If the offeror does not fill-in the blanks below, the official who signed the offer will be deemed to be the offeror's representative for Contract Administration, which includes all matters pertaining to payments.

Name:
Telephone Number:
Address:

L.5 652.228-70 DEFENSE BASE ACT – COVERED CONTRACTOR EMPLOYEES (JUNE 2006)

(a) Bidders/offerors shall indicate below whether or not any of the following categories of employees will be employed on the resultant contract, and, if so, the number of such employees:

Category	Yes/No	Number	
(1) United States citizens or residents			
(2) Individuals hired in the United States, regardless of citizenship			
(3) Local nationals or third country nationals where contract performance takes place in a country where there are no local workers' compensation laws		local nationals:	
		third-country nationals:	
(4) Local nationals or third country nationals where contract performance takes place in a country where there are local workers' compensation laws		local nationals:	
		third-country nationals:	

(b) The Contracting Officer has determined that for performance in the country of **Philippines**.

☑ Workers' compensation laws exist that will cover local nationals and third country nationals.

☐ Workers' compensation laws do not exist that will cover local nationals and third country nationals.

(c) If the bidder/offeror has indicated "yes" in block (a)(4) of this provision, the bidder/offeror shall not purchase Defense Base Act insurance for those employees. However, the bidder/offeror shall assume liability toward the employees and their beneficiaries for war-hazard injury, death, capture, or detention, in accordance with the clause at FAR 52.228-4.

(d) RESERVED

(End of provision)

SCOPE OF WORK

C.1 GENERAL

C.1.1 The Contractor shall furnish all required personnel, tools of trade, equipment, materials, transportation, delivery and a competent English speaking Supervisor or Foreman who will stay at the job site every work day throughout the progress of the project in connection with the Refurbishment of ARC Basement, ARC Building; U.S. Embassy, Seafront Compound, Pasay City in compliance with the set of drawings and technical provisions contained herein.

C.1.2 The work shall consist of but not limited to:

1. Installation of wall cladding and new gypsum board walls as shown in the design drawing. .
2. Removal of all affected electrical conduits, switches, outlets, including lighting fixtures.
3. Removal of existing toilet fixtures and affected plumbing lines.
4. Removal/chipping of affected toilet floor and wall tiles.
5. Removal of toilet cubicle partition.
6. Installation of new toilet floor and wall tiles.
7. Installation of new toilet cubicle partitions.
8. Installation of new Suspended-Framing Ceiling.
9. Installation of new toilet fixtures and accessories.
10. Layout new ceiling tiles and lighting fixtures.
11. Perform plumbing works as shown in the design drawing.
12. Perform electrical, fire alarm, data and telephone works as shown in the design drawing.
13. Paint all new walls and repaint all existing, and affected walls.
14. Install / layout new vinyl floor tiles.
15. Install new vinyl baseboard; install aluminum corner guard.

C.2 SPECIFICATIONS AND DRAWINGS

1. The Contractor shall keep on the work site a copy of the Drawings and Scope of Work; and shall at all times give the Contracting Officer's Representative (COR) or his delegated representative access thereto.
2. The general character and scope of the work are illustrated by the drawings listed in the Scope of Work.
3. Anything mentioned in the Scope of Work and not shown on the Drawings; or shown on the Drawings and not mentioned in the Scope of Work, shall be of like effect as if shown or mentioned in both. In case of such differences between the Drawings and the Scope of Work, **the Scope of Work shall govern**.
4. All dimensions and thicknesses of materials mentioned in this Scope of Work, and shown on the Drawings are according to American and Philippine standards; however, it is not the intention to require that materials will meet these dimensions exactly. Standard sizes and thicknesses as used in the highest type of work will be acceptable; provided that the sizes and dimensions of proposed will satisfy the required condition.
5. In addition to other records required under the contract, Contractor shall maintain the following:

a. As-Built Drawings: The Contractor shall maintain at the job site two sets of full size contract drawings showing any deviations which have been made from the contract drawings, including buried or concealed construction. Special attention shall be given to recording the horizontal and vertical location of all buried utilities that differ from the contract drawings. These drawings shall available for review by the COR at all times.

b. Post-Project Submittals: After completion of the project and not later than twenty (20) days from the date of acceptance, the Contractor is required to submit the following:

- Drawings: The Contractor shall maintain and update the As-Built drawings of the project. Requests for partial payments may not be processed if the marked prints are not kept current, and request for final payment will not be approved until the marked prints are delivered to the COR. The required sets for submittal are as follows:
  - ✓ One (1) set of reproducible As-Built drawings on Mylar or Sepia prints.
  - ✓ Three (3) sets of Blueline Prints.
  - ✓ CADD File DVD Disk. The CADD File shall be encoded in Autocad Rel. 2007 (or latest).
- Documentations: The Contractor is required to submit Tabulated Listings of all Finish Materials, Machinery/Equipment installed for easy reference and for future maintenance purposes. All Machinery/Equipment shall include related Technical Information. These listings shall include, but not limited to the following:
  - ✓ Toilet Fixtures and Accessories
  - ✓ Floor and Wall Tiles
  - ✓ Paint Colors, Paint Color Finish Schedule
  - ✓ Baseboard, Scuff Board, and Cornice type
  - ✓ Door Closer, Door Stopper
  - ✓ Lighting Fixtures
  - ✓ Electrical Switches/Outlets
  - ✓ Exhaust Fans

C.3 TECHNICAL PROVISION

C.3.1 INSTALLATION OF GYPSUM BOARD WALL

1. Installation Standards: ASTM C 754, and ASTM C 840 requirements that apply to framing installation. 2. Extend partition framing full height to structural supports or substrates above suspended ceilings,

except where partitions are indicated to terminate at suspended ceilings. Continue framing over frames for doors and openings and frame around ducts penetrating partitions above ceiling to provide support for gypsum board.

a. Cut studs 13mm short of full height to provide perimeter relief.

b. For fire-resistance-rated and STC-rated partitions that extend to the underside of floor/roof slabs and decks or other continuous solid-structure surfaces to obtain ratings, install framing around structural and other members extending below floor/roof slabs and decks, as needed to support gypsum board closures and to make partitions continuous from floor to underside of solid structure.
   - Terminate partition framing at suspended ceilings where indicated.

c. Install steel studs and furring 406mm o.c., unless otherwise indicated.

d. Frame door openings to comply with GA-600, unless otherwise indicated. Screw vertical studs at jambs to jamb anchor clips on door frames; install runner track section (for cripple studs) at head and secure to jamb studs.
   - Install two studs at each jamb, unless otherwise indicated.
   - Install cripple studs at head adjacent to each jamb stud with a minimum of 13mm clearance from jamb stud to allow for installation of control joint.

- Extend jamb studs through suspended ceilings and attach to underside of floor or roof structure above.

e. Installation of Gypsum Board

- Gypsum Board Application and Finishing Standards: ASTM C 840 and GA-216.
- Install sound attenuation blankets before installing gypsum panels, unless blankets are readily installed, after panels have been installed on one side.
- Install gypsum panels with face side out. Butt panels together for a light contact at edges and ends with not more than 1.5mm of open space between panels. Do not force into place.
- Attach gypsum panels to steel studs so leading edge or edge of each panel is attached to open (unsupported) edges of stud flanges first.
- Attach gypsum panels to framing provided at openings and cutouts.
- Cover both faces of steel stud partition framing with gypsum panels in concealed spaces (above ceiling, etc.), except in chases braced internally.

C.3.2 INSTALLATION OF SUSPENDED-FRAMING SYSTEM CEILING

1. Examine substrates, areas, and conditions; including structural framing and substrates to which acoustical tile ceiling attach or abut, with Installer present, for compliance with requirements specified in this and other Sections that affect ceiling installation and anchorage and with requirements for installation tolerances and other conditions affecting performance of acoustical tile ceilings.
2. Measure each ceiling area and establish layout of acoustical tiles to balance border widths at opposite edges of each ceiling. Avoid using less-than-half-width tiles at borders, and comply with layout shown on Reflected Ceiling Plan. Proceed with installation only after unsatisfactory conditions have been corrected.
3. Height of finished ceiling surface shall be **2.4 Mts. (8'- 0") +/-**. Attach wall angle using appropriate fasteners.
4. Install hangers every 48" along Main Runners, at a maximum of 24" from the walls. Where width of ducts and other construction within ceiling plenum produces hanger spacing that interfere with location of hangers at spacing required to support standard suspension system members, install supplemental members and hangers in form of trapezes or equivalent devices.
5. Secure wire hangers to ceiling suspension members and to supports above with a minimum of three tight turns. Connect hangers directly either to structures or to inserts, eye screws, or other devices that are secure and appropriate for substrate and that will not deteriorate or otherwise fail due to age, corrosion, or elevated temperatures.
6. Install suspension system runners so they are square and securely interlocked with one another. Remove and replace dented, bent, or kinked members.
7. Arrange directionally patterned acoustical tiles as indicated on the Reflected Ceiling Plan. Install acoustical tiles in coordination with suspension system and exposed moldings and trim. Fit adjoining tile to form flush, tight joints. Scribe and cut tile for accurate fit at borders and around penetrations through tile. Protect lighting fixtures and air ducts to comply with requirements indicated for the resistance-rated assembly.

C.3.3 INSTALLATION OF CERAMIC TILE AT TOILET

1. Remove/Demolish all affected walls and door as indicated on the Plan.
2. Remove affected toilet fixtures, including affected plumbing lines buried inside walls or under floor and inside pipe chase, remove cubicle partitions as necessary. Chip-off existing ceramic floor and wall tiles.
3. Do not start wall tile installation until all existing ceramic tiles has been chipped-off, and roughing-in for plumbing and electrical works has been installed and tested.
4. Do not begin floor tile installation until installation of wall tile has been completed.
5. Install new 6mm x 300mm x 300mm (1/4" x 12" x 12") Ceramic Floor and Wall Tiles on both Male and Female Toilet and 6mm x 600mm x 600mm Granite Tiles
6. Make joints parallel, plumb, level, and in alignment. Make all joint gaps uniform in width and space to accommodate tile with a minimum of cutting. Minimum joint width shall be no less than 2mm (5/64"). Maintain standard mounting widths between units abutting sheets of mounted ceramic tile.
7. Prior to grouting, keep joints open and clean, and prevent filling with dirt.
8 After tile is grouted and completely dry, remove excess grout from the tiles, brush joints clean then apply grout sealer.
9. Acid-Clean wall and floor tiles as necessary, this shall be done not later than 14 days after completely setting all tiles.

C.3.4 TOILET ACCESSORIES

1. Submit for each type of accessory specified. Include descriptions of materials, finishes, fastening and anchoring devices, and appurtenances. Approved samples may be installed in the work provided each sample is labeled for identification and location recorded.
2. Surface of fastening devices exposed after installation shall have the same finish as the attached accessory. Install accessories at the location and height indicated in the drawings. Protect exposed surfaces of accessories with strippable plastic or by other means until the installation is accepted. Brackets, plates, anchoring devices and similar items use for mounting accessories in showers shall be bedded in a silicone sealant, as they are set to provide a watertight installation. After installation, clean exposed surfaces and restore damaged work to its original condition or replace with new work.
3. All surface-mounted accessories shall be mounted on concealed back plates, unless otherwise specified. Accessories without back plates shall have concealed fasteners. Unless indicated or specified otherwise, install accessories with sheet metal screws or other approved fasteners as required by the construction. Install back plates in the same manner, or provide with lugs or anchors set in mortar, as required by the construction.

C.3.5 PAINTING OF WALLS

1. Remove, mask, or otherwise protect prior to surface preparation and painting operations such items as hardware, hardware accessories, machined surfaces, plates, lighting fixtures, and similar items in contact with coated surfaces. Surfaces concealed by portable or movable objects, and/or by surface mounted articles readily detachable by removal of fasteners such as screws or bolts are included in this work.
2. Following completion of painting works, and all surfaces are completely dry, reinstall removed items utilizing workmen skilled in the trades involved for such removal and installation. Protect from contamination by coating materials all surfaces not to be coated. Restore all surfaces that are contaminated by painting materials to original condition.
3. Provide finished surfaces free from runs, drops, ridges, waves, laps, brush marks, and variations in colors. Avoid contamination of other surfaces and public and private property in the area; repair all damages thereto. Allow sufficient time between coats to permit thorough drying and provide each coat in proper condition to receive the next coat.

4. Each coat shall cover the surface of the preceding coat or surface completely. There shall be an easily perceptible difference in shades of successive coats. Thoroughly work painting materials into all joints, crevices, and open spaces. Finished surfaces shall be smooth, even, and free of defects. Retouch damaged painting before applying succeeding coat.
5. Apply two (2) coats of interior Flat Latex paint.

C.3.6 ELECTRICAL WORKS

1. Electrical installations shall conform to requirements of NFPA 70 and to requirements specified herein.
2. Provide insulated conductors installed in conduit, except where specifically indicated or specified otherwise or required by NFPA 70 to be installed otherwise. Provide insulated, green equipment grounding conductor in feeder and branch circuits, including lighting circuits. Grounding conductor shall be separate from electrical system neutral conductor. Provide insulated, green conductor for grounding conductors installed in conduit or raceways. Minimum conduit size shall be 15mm in diameter for low voltage lighting and power circuits.
   2.1. Nonmetallic Conduit: Conduit shall not penetrate fire walls, fire partitions, or floors.
      a. Restrictions applicable to PVC Schedule 40 and PVC Schedule 80:
         - Do not use in feeder circuits.
         - Do not use in areas subject to severe physical damage including, but not limited to, mechanical equipment rooms, electrical equipment rooms, hospitals, power plants, missile magazines, and other such areas.
         - Do not use in hazardous areas.
         - Do not use in penetrating fire-rated walls or partitions, fire-rated floors, etc.
   2.2. Underground Conduit Other Than Service Entrance: Convert nonmetallic conduit, other than PVC Schedule 40, to plastic-coated rigid, or IMC, steel conduit before rising through floor slab; plastic coating shall extend minimum 6 inches above floor.
   2.3. Conduit in Floor Slabs: Rigid steel, Steel IMC, or PVC type EPC-40.
3. Conduit Installation: Unless otherwise indicated, conceal conduit within finished walls, ceilings, and floors. Keep conduit minimum of 150mm away from parallel runs of flues and steam or hot water pipes. Install conduit parallel with or at right angles to ceilings, walls, and structural members where located above accessible ceilings and where conduit will be visible after completion of project.
   3.1. Conduit Through Floor Slabs: Where conduits rise through floor slabs, curved portion of bends shall not be visible above finish slab.
   3.2. Conduit Support: Support conduit by pipe straps, wall brackets, hangers, or ceiling trapeze. Fasten by wood screws to wood; by toggle bolts on hollow masonry units; by concrete inserts or expansion bolts; on concrete or brick; and by machine screws, welded or threaded studs, or spring-tension clamps on steel work. Threaded C-clamps may be used on rigid steel conduit only. Do not weld conduits or pipe straps to steel structures. Load applied to fasteners shall not exceed one-fourth proof test load. Fasteners attached to concrete ceiling shall be vibration-resistant or shock-resistant. Holes cut to depth of more than 1-1/2 inches in reinforced concrete beams or to depth of more than 3/4 inch in concrete joints shall not cut main reinforcing bars. Fill unused holes. In partitions of light steel construction, use sheet metal screws. In suspended-ceiling construction, run conduit above ceiling. Do not support conduit by ceiling support system. Spring-steel fasteners may be used for lighting branch circuit conduit supports in suspended ceilings in dry locations.
   3.3. Directional Changes in Conduit Runs: Make changes in direction of runs with symmetrical bends or cast-metal fittings. Make field-made bends and offsets with hickey or conduit-bending machine. Do not install crushed or deformed conduits.

Avoid trapped conduits. Prevent plaster, dirt, or trash from lodging in conduits, boxes, fittings, and equipment during construction. Free clogged conduits of obstructions.

3.4. Telephone and Signal System Conduits: Install in accordance with specified requirements for conduit and with additional requirement that no length of run shall exceed 150 feet for trade sizes of 2 inches or smaller, and shall not contain more than two 90-degree bends or equivalent. Provide pull or junction boxes where necessary, to comply with these requirements. Inside radii of bends in conduits one-inch trade size or larger shall be minimum of five times of nominal diameter. Terminate conduit in terminal cabinet with two locknuts and plastic bushing.

3.5. Conduit Installed in Concrete Floor Slabs: Locate so as not to adversely affect structural strength of slabs. Install conduit within middle one-third of concrete slab. Space conduits horizontally minimum of three diameters, except at cabinet locations. Curved portions of bends shall not be visible above finish slab. Increase slab thickness as necessary to provide minimum one-inch cover over conduit. Where embedded conduits cross expansion joints, provide suitable watertight expansion fittings and bonding jumpers. Conduit larger than one-inch trade size shall be parallel with or at right angles to main reinforcement; when at right angles to reinforcement, conduit shall be close to one of supports of slab.

3.6. Locknuts and Bushings: Fasten conduits to sheet metal boxes and cabinets with two locknuts where required by NFPA 70, where insulated bushings are used, and where bushings cannot be brought into firm contact with the box; otherwise, use minimum single locknut and bushing. Locknuts shall have sharp edges for digging into wall of metal enclosures. Install bushings on ends of conduits, and provide insulating type where required by NFPA 70.

3.7. Flexible Connections: Provide flexible connections of short length, 1.8 meters maximum, for recessed and semi-recessed lighting fixtures; for equipment subject to vibration, noise transmission, or movement; and for motors. Provide liquid-tight flexible conduit in wet locations. Provide separate ground conductor across flexible connections.

4. Boxes, Outlets, and Supports: Provide boxes in wiring or raceway systems wherever required for pulling of wires, making connections, and mounting of devices or fixtures. Boxes for metallic raceways shall be cast-metal, hub-type when located in wet locations, when surface mounted on outside of exterior surfaces, when installed exposed up to 2.1 meters above interior floors and walkways, or when installed in hazardous areas. Boxes in other locations shall be sheet steel. Each box shall have volume required by NFPA 70 for number of conductors enclosed in box. Boxes for mounting lighting fixtures shall be minimum 100mm square, or octagonal, except that smaller boxes may be installed as required by fixture configurations, as approved. Boxes for use in masonry-block or tile walls shall be square cornered, tile type, or standard boxes having square corner, tile type covers. Provide gaskets for cast-metal boxes installed in wet locations, and boxes installed flush with outside of exterior surfaces. Fasten boxes and supports with wood screws on wood; with bolts and expansion shields on concrete or brick; with toggle bolts on hollow masonry units; and with machine screws or welded studs on steel.

5. Conductor Identification: Provide conductor identification within each enclosure where tap, splice, or termination is made. For conductors no.6 AWG (14mm²) and smaller diameter, color coding shall be by factory-applied, color-impregnated insulation. For conductors no.4 AWG (22mm²) and larger diameter, color coding shall be by plastic-coated, self-sticking markers; colored nylon cable ties and plates; or heat shrink-type sleeves. Identify control circuit terminations.

6. Splices: Make splices in accessible locations. Make splices in conductors no.10 AWG and smaller diameter with insulated, pressure-type connector. Make splices in conductors no.8 AWG and larger diameter with solderless connector, and cover with insulation material equivalent to conductor insulation.

7. Covers and Device Plates: Install with edges in continuous contact with finished wall surfaces without use of mats or similar devices. Plaster fillings are not permitted. Plates shall be installed with alignment tolerance of 1/16 inch. Use of sectional-type device plates are not permitted. Provide rubber gasket for plates in wet locations.
8. Electrical Penetrations: Openings around electrical penetrations through fire-resistance walls, partitions, floors, or ceilings shall be sealed to maintain fire resistive integrity as tested per ASTM E814.
9. Grounding and Bonding: In accordance with NFPA 70, ground-exposed noncurrent-carrying metallic parts of electrical equipment, metallic raceway systems, grounding conductor in metallic and nonmetallic raceways. Where ground fault protection is employed, ensure that connection of ground and neutral does not interfere with correct operation of fault protection.
   9.1. Grounding Conductor: Provide insulated, green equipment grounding conductor in feeder and branch circuits, including lighting circuits. Grounding conductor shall be separate from electrical system neutral conductor.
   9.2. Resistance: Maximum resistance-to-ground of grounding system shall not exceed 25 ohms under dry conditions. Where resistance obtained exceeds 25 ohms, contact Engineer for further instructions.
10. Repair of Existing Work: Repair of existing work which includes demolition, and modification of existing electrical distribution systems shall be performed as follows:
   10.1. Workmanship: Lay out work in advance. Exercise care where cutting, channeling, chasing, or drilling of floors, walls, partitions, ceilings, or other surfaces is necessary for proper installation, support, or anchorage of conduit, raceways, or other electrical work. Repair damage to buildings, piping, and equipment using skilled craftsmen of trades involved.
   10.2. Existing Concealed Wiring to be Removed: Existing concealed wiring to be removed shall be disconnected from its source. Remove conductors; cut conduit flush with floor, underside of floor, and through walls; and seal openings.
   10.3. Continuation of Service: Maintain continuity of existing circuits of equipment to remain. Existing circuits of equipment shall remain energized. Circuits which are to remain but were disturbed during demolition shall have circuits wiring and power restored back to original condition.
11. Field Quality Control: Furnish test equipment and personnel, and submit written copies of test results. Give Engineer 5 working days' notice prior to each test.
   11.1. Devices Subject to Manual Operation: Each device subject to manual operation shall be operated at least five times, demonstrating satisfactory operation each time.
   11.2. Test on 600-volt Wiring: Test 600-volt wiring to verify that no short circuits or accidental grounds exist. Perform insulation resistance tests on wiring no.6 AWG and larger diameter using instrument which applies voltage of approximately 500 volts to provide direct reading of resistance. Minimum resistance shall be 250,000 ohms.
   11.3. Grounding System Test: Test grounding system to ensure continuity and resistance to ground is not excessive. Make resistance measurements in dry weather, not earlier than 48 hours after install. Submit written results of each test to Engineer, and indicate location of rods as well as resistance and soil conditions at time measurements were made.
12. Panel board: Supply and install of New Panel board. Panel boards shall be composed of Main Panel, Lighting Panel, Power Panel and AC Panel. Panels shall be NEMA 1 with Grounding and Neutral Bus Bars.

C.3.7 INTERIOR FIRE ALARM SYSTEMS

1. The work includes providing new conduit lines for the fire alarm system including fittings, equipment and appurtenances. Provide each system complete and ready for operation. Equipment, materials, installation, workmanship, inspection, and testing

shall be in strict accordance with the required and advisory provisions of NFPA 72A and NFPA 72E, except as modified herein.

2. Provide electrical wiring in accordance with NFPA 70 and NFPA 72A. Conductors shall be copper, and shall be color coded. Conductor for 120volt circuits shall be 3.5mm² (no.12 AWG) minimum; single conductors for low-voltage DC circuits shall be 1.5mm² (no.16 AWG) minimum. Provide wiring in rigid metal conduit or intermediate metal conduit. Conceal conduit in finished areas of new construction and wherever practicable in existing construction. Identify conductors within each enclosure where a tap, splice, or termination is made. Identify conductors by plastic-coated, self-sticking, printed markers or by heat-shrink type sleeves. Wire the alarm initiating and notification signal devices so that removal will cause the system trouble device to sound. Pigtail or 'T' tap connections to alarm initiating devices, evacuation alarm bells, horns, and fire warning light; are not accepted.
3. Field Inspection and Test: Before Final Acceptance of the work, test each system to demonstrate compliance with the contract requirement. Each system shall be subjected to complete functional and operational tests including tests in place of each heat and smoke detector. When tests have been completed, and corrections made; submit a signed and dated certificate with Request for Formal Inspection and Tests.
4. Formal Inspection and Test: The COR will witness formal tests after receipt or written certification that preliminary tests have been completed and that the system is ready for Final Inspection. Preliminary tests shall be repeated, and functional & operational tests conducted, as requested by the Safety Engineer. Correct defects and conduct additional tests to demonstrate that the system conforms to the contract specifications.

C.3.8 PLUMBING WORKS:

INSTALLATION: Installation of plumbing systems such as Poly vinyl chloride (PVC) including fixtures, equipment, materials, and workmanship shall be in accordance with IAPMO UPC, except as modified herein. When fixtures require both hot water and cold water supplies, provide the hot water supply to the left of the cold water supply.

1. Pipe Supports (Hangers): Provide additional supports at the concentrated loads in piping between supports.

2. Installation of Pipe Sleeves: Provide pipe sleeves where piping passes through walls, floors, roofs, and partitions. Secure sleeves in proper position and location during construction. Provide sleeves of sufficient length to pass through entire thickness of walls, floors, roofs, and partitions. Provide not less than 0.25-inch space between exterior of piping or pipe insulation and interior of sleeve. Firmly pack space with insulation and calk at both ends of the sleeve with plastic waterproof cement which will dry to a firm but pliable mass, or provide a segmented elastomeric seal. Seal both ends of penetrations through fire walls and fire floors to maintain fire resistive integrity with UL listed fill, void, or cavity material. Extend sleeves in floor slabs 3 inches above the finished floor, except sleeves are not required where DWV piping passes through concrete floor slabs located on grade.

3. FIELD TESTING: Before final acceptance of the work, test each system as in service to demonstrate compliance with the contract requirements. Perform the following tests in addition to the tests specified in IAPMO UPC, except as modified herein. Correct all defects in the work provided by the Contractor, and repeat the tests until the work is in compliance with contract requirements.

4. Domestic Water Piping: Before insulation is applied, hydrostatically test each piping system at not less than 100 psi with no leakage or reduction in gauge pressure for 24 hours.

5. DWV Piping: Before the installation of fixtures, cap the ends of each system, fill the piping with water to the roof, and allow to stand until a thorough inspection has been made. If the system is tested in sections, each opening shall be plugged and each section tested with not less than a 10-foot head or water. After the plumbing fixtures have been set and their traps filled with water, subject the entire sanitary system to a final air pressure test of not more than 1.0 inch of water column. The entire system must be proven absolutely tight under such test.

6. DISINFECTION: Disinfect the new water piping and existing water piping affected by Contractor's operations in accordance with AWWA C601. Fill the piping systems with solution containing minimum of 50 parts per million of available chlorine and allow solution to stand for minimum of 24 hours. Flush the solution from the systems with clean water until maximum residual chlorine content is not greater than 0.2 parts per million.

C.3.9 SHEET VINYL FLOOR COVERING

1. EXAMINATION.

1.1 Examine substrates, with Installer present, for compliance with requirements for installation tolerances, moisture content, and other conditions affecting performance.
1.2 Verify that finishes of substrates comply with tolerances and other requirements specified in other Sections and that substrates are free of cracks, ridges, depressions, scale, and foreign deposits that might interfere with adhesion of floor coverings.
1.3 Proceed with installation only after unsatisfactory conditions have been corrected.

2. PREPARATION

2.1 Prepare substrates according to manufacturer's written recommendations to ensure adhesion of floor coverings.
2.2 Concrete Substrates: Prepare according to ASTM F 710.
2.3 Verify that substrates are dry and free of curing compounds, sealers, and hardeners.
2.4 Remove substrate coatings and other substances that are incompatible with floor covering adhesives and that contain soap, wax, oil, or silicone, using mechanical methods recommended by manufacturer. Do not use solvents.
2.5 Use trowelable leveling and patching compound to fill cracks, holes, and depressions in substrates.
2.6 Move floor coverings and installation materials into spaces where they will be installed at least 48 hours in advance of installation.
2.7 Do not install floor coverings until they are same temperature as space where they are to be installed.
2.8 Sweep and vacuum clean substrates to be covered by floor coverings immediately before installation. After cleaning, examine substrates for moisture, alkaline salts, carbonation, and dust. Proceed with installation only after unsatisfactory conditions have been corrected.

3. INSTALLATION

3.1 Unroll sheet vinyl floor coverings and allow them to stabilize before cutting and fitting.
3.2 Lay out sheet vinyl floor coverings as follows:

3.3 Maintain uniformity of floor covering direction.

3.4 Minimize number of seams; place seams in inconspicuous and low-traffic areas, at least 6 inches (152 mm) away from parallel joints in floor covering substrates.

3.5 Match edges of floor coverings for color shading at seams.

3.6 Avoid cross seams.

3.7 Scribe and cut floor coverings to butt neatly and tightly to vertical surfaces, permanent fixtures, and built-in furniture including cabinets, pipes, outlets, edgings, thresholds, and nosings.

3.8 Extend floor coverings into toe spaces, door reveals, closets, and similar openings.

3.9 Maintain reference markers, holes, or openings that are in place or marked for future cutting by repeating on floor coverings as marked on substrates. Use chalk or other nonpermanent marking device.

3.10 Install floor coverings on covers for telephone and electrical ducts and similar items in installation areas. Maintain overall continuity of color and pattern with pieces of floor coverings installed on covers. Tightly adhere floor covering edges to substrates that abut covers and to cover perimeters.

3.11 Adhere floor coverings to substrates using a full spread of adhesive applied to substrate to produce a completed installation without open cracks, voids, raising and puckering at joints, telegraphing of adhesive spreader marks, and other surface imperfections.

3.12 Install metal corners at inside and outside corners.

4. CLEANING AND PROTECTION

4.1 Perform the following operations immediately after completing floor covering installation:

- Remove adhesive and other blemishes from floor covering surfaces.
- Sweep and vacuum floor coverings thoroughly.
- Damp-mop floor coverings to remove marks and soil.
- Do not wash floor coverings until after time period recommended by manufacturer.

4.2 Protect floor coverings from mars, marks, indentations, and other damage from construction operations and placement of equipment and fixtures during remainder of construction period. Use protection methods recommended in writing by manufacturer.

- Apply protective floor polish to surfaces that are free from soil, visible adhesive, and blishes if recommended in writing by manufacturer.
- Cover floor coverings with undyed, untreated building paper until Substantial Completion.
- Do not move heavy and sharp objects directly over floor coverings. Place plywood or hardboard panels over floor coverings and under objects while they are being moved. Slide or roll objects over panels without moving panels.

C.4 PERSONNEL

1. The Contractor shall provide sufficient personnel possessing the skills and knowledge to perform the work required of this project.
2. Immediately upon commencement of work, the Contractor shall assign on site a knowledgeable English speaking project supervisor who shall be responsible for the overall management and coordination of this contract, receive instructions from the COR, resolve problems and with authority to act for the Contractor.

C.5 QUALITY CONTROL

1. All work shall be done in favorable weather conditions or the work shall be suitably protected from the weather.
2. All damages inflicted on the existing surrounding structures and property resulting from the performance of this project shall be repaired or restored to its original condition at the Contractor's expense.
3. Liquidated damages of **Php 9,947.20** shall be assessed for each day the work remains incomplete beyond the work deadline.
4. The Contractor shall guarantee workmanship for one (1) year determined from the date of final acceptance.

C.6 WORKING HOURS

1. Working hours shall be from 0730 hours to 1630 hours, Monday thru Friday.
2. Request for Saturday, Sunday, Holiday, and After-office-hour works shall be submitted to the COR at least two (2) days in advance for the approval of the Security Office.

C.7 PROHIBITIONS

1. Smoking is strictly prohibited at the work site. A smoking area will be assigned.
2. Contractor's personnel are to use only proper toilet facilities. Urinating on walls, plants, trees, grass and other areas is strictly prohibited. Violators shall be removed and escorted outside the Compound, and shall be banned from USG Facilities permanently.

C.8 SECURITY

1. Contractor's personnel must stay within the working site and not wander around the adjacent offices or areas not covered under this Scope of Work.
2. Contractor's personnel are prohibited to roam around the premises during work hours or stay inside the Compound after each day of work.

C.9 GOVERNMENT-FURNISHED MATERIALS, PROPERTY AND SERVICES

1. Electric power and water required for this project shall be supplied. The Contractor is responsible for all the connections and extensions to the work area.
2. USG shall provide the following materials.
   2.1 Light Fixtures
   2.2 Vinyl Tiles and Floor Tile Adhesive
2. The project shall be monitored and inspected by the COR and/or his delegated Project Inspector upon whose approval of the work will be accepted.
3. The COR shall designate the area where the Contractor can build a temporary storage and lockers space which shall be kept clean, orderly and secure at all times.

C.10 CONTRACTOR-FURNISHED ITEM

1. MATERIALS
   a. The Contractor shall provide all labor, materials, transportation and deliveries to perform such
   services required under this contract.
   b. The Contractor shall put up temporary barriers or yellow 'CAUTION' tapes to keep away people
   and/or vehicles from work site.

2. EQUIPMENT and TOOLS
   a. The Contractor shall furnish all tools and special equipment's to perform **Section C.1.2**.
   b. All temporary connections to existing utility lines will be made by the Contractor. The Contractor
   shall enforce strict utilities conservation practices.

C.11 SPECIFIC TASK

1. The Contractor guaranties to complete the work within **Forty Five (45) working days** from the date of Notice to Proceed.
2. The Contractor shall submit to the COR or GTM a 'Daily Log Sheet', completed daily. Data to be reported includes data on workers by classification, the move-on and move-off of construction equipment furnished by the Primary and Subcontractor, or furnished by the USG; and materials and equipment's delivered to the site.

C.12 CLEANING TASK

1. The Contractor shall continuously, during progress of work, remove and dispose-off dirt and debris accumulated; and maintain work area clean, neat and orderly, and in such order as to prevent safety hazards. Debris shall be collected and removed from the job site daily.
2. Domestic rubbish containers on the premises shall not be utilized by the Contractor for storage or disposal of construction rubbish.

C.13 SAFETY

1. The project safety, in all aspects, is the sole responsibility of the Contractor.
2. The Contractor shall comply with the U.S. OSHA (Occupational Safety and Health Administration), and Local Safety and Health Requirements, and shall assume full responsibility and liability for compliance with all other applicable standards and regulations pertaining to accident prevention, life, health, and safety of personnel; as well as preventing damage to materials, supplies, properties, and equipment's. The Contractor will hold the Government and its agents harmless for any action, errors, or omission on his part, his employees, workers, or his subcontractors that result in illness, injury or death.
3. The Contractor shall provide his employees/workers with and require the use of safety equipment, personal protective equipment (PPE), and device necessary for protection.
4. ***The Contractor shall be responsible for all injuries to his employees/workers.***

ATTACHMENT #2

RSO BIOGRAPHIC DATA

Biographical Data Form for Contractual Hires
Diplomatic Security Investigative Unit (DSIU) 301-2661/301-2078

Full Name:_____
(Last) (First) (Middle)
Present Address:_____Starting:_____
Provincial Address:_____From:_____To:_____
Tel. No:_____Date of Birth:_____Place of Birth:_____
Other Names Used:_____
(Maiden, Nickname, etc.)
Marital Status:_____Name of Spouse:_____
Height:_____Weight:_____ Hair Color:_____Eye Color:_____

RELATIVES (Parents, Brothers, Sisters, and In-Laws)

Name	Relationship	Nationality	Occupation	Present address in full

EMPLOYMENT HISTORY: (Current and Last Three Previous Employers)

Position	Name & Address of Employer	Date	Reason for Leaving

Have you ever been fired or forced to resign for any reason? (If yes, give details):

_____

_____

Have you ever been arrested or charged with any offense by the police or the military? (If yes, provide full details)_____

_____

Are you now, or have you ever been, a member of any organization or association that advocates the overthrow of the United States Government by force or violence? (If yes, provide full details):

_____

E. CERTIFICATION

I certify that the information above is true, complete, and correct, to the best of my knowledge.

_____	_____
Signature	Date

Please Submit the Following to DSIU – Room 138-B, NOX 1 Building

FIRST TIME BADGE AND RECORD CHECK

- **Original copy of NBI clearance**
- **Original copy of Barangay clearance**
- **Original copy of Police clearance**
- **Biographic data sheet**
- **Cover memo from Employer/Section Head**
- **2X2 photo**

FOR BADGE RENEWALS ONLY

- **Cover memo from Employer/Section Head**
- **Biographic data form**
- **2x2 photo**

ATTACHMENT #3

PHILIPPINE AND AMERICAN HOLIDAYS FOR THE CALENDAR YEAR 2014

Holiday	Nationality	Legal Date	Closing Date
New Year's Day	U.S./PHL	Jan 1, Wed	Jan 1, Wed
M. L. King Jr. Day	U.S.	Jan 20, Mon	Jan 20, Mon
U.S. President's Day	U.S.	Feb 17, Mon	Feb 17, Mon
Bataan & Corregidor / Heroism Day	PHL	Apr 9, Wed	Apr 9, Wed
Maundy Thursday	PHL	Apr 17, Thurs	Apr 17, Thurs
Good Friday	PHL	Apr 18, Fri	Apr 18, Fri
Philippine Labor Day	PHL	May 1. Thurs	May 1. Thurs
U.S. Memorial Day	U.S.	May 26, Mon	May 26, Mon
Philippine Independence Day	PHL	Jun 12, Thurs	Jun 12, Thurs
U.S. Independence Day	U.S.	Jul 4, Fri	Jul 4, Fri
Eid'l Fitr	PHL	TBA	TBA
Ninoy Aquino Day	PHL	Aug 21, Thurs	Aug 21, Thurs
U.S. Labor Day	U.S.	Sep 1, Mon	Sep 1, Mon
Columbus Day	U.S.	Oct 13, Mon	Oct 13, Mon
U.S. Veterans Day	U.S.	Nov 11, Tues	Nov 11, Tues
U.S. Thanksgiving Day	U.S.	Nov 27, Thurs	Nov 27, Thurs
Christmas Day	U.S./PHL	Dec 25, Thurs	Dec 25, Thurs
Special Non-Working Day	PHL	Dec 26, Fri	Dec 26, Fri
Rizal Day	PHL	Dec 30, Tues	Dec 30, Tues
Last Day of the Year	PHL	Dec 31, Wed	Dec 31, Wed

Any other day designated by Federal Law, Executive Order, or Presidential Proclamation.

(a) When any such day falls on a Saturday or Sunday, the following Monday is observed. Observance of such days by Government personnel shall not be cause for additional period of performance or entitlement to compensation except as set forth in the contract. If the contractor's personnel work on a holiday, no form of holiday or other premium compensation will be reimbursed either as a direct or indirect cost, unless authorized pursuant to an overtime clause elsewhere in this contract.

ATTACHMENT # 4

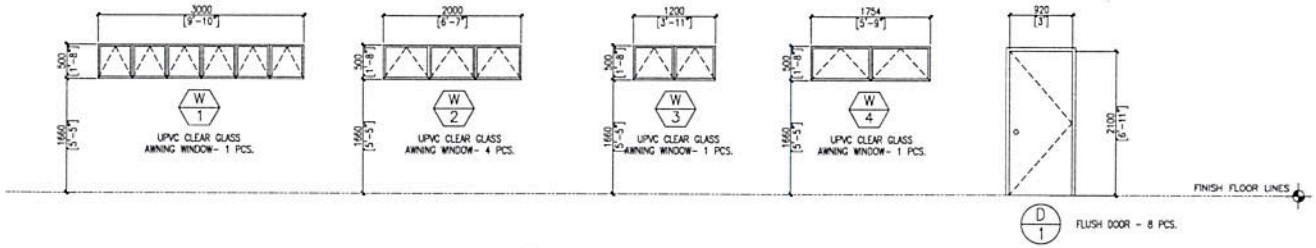

W-D A 02 DOORS AND WINDOWS
SCALE 1:50 MTS.

LEGEND:

- (A) 15/16" Wall Angle
- (B) 24" X 24" High Density Fiberglass Ceiling
- (C) 15/16" Ceiling Main Tee Runner spaced at 600mm on center
- (D) 15/16" x 24" Lg. Cross Tee Runner spaced at 600mm on center
- (E) Gauge# 12 G.I. Tie Wire Hanger spaced at every 1200mm on center bothways
- (F) Existing Exterior Wall
- (G) New Awning Window to be installed
- (H) Wall Bracket T-profile
- (I) New 12mm Thk. Gypsum Board and 50 x 38mm Metal Studs spaced verticall at 400mm on center and at 600mm oncenter horizontally

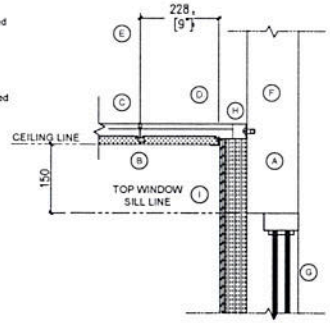

SD-1 A 02 DETAIL SECTION OF CEILING WALL AND WINDOW
SCALE 1:10 MTS.

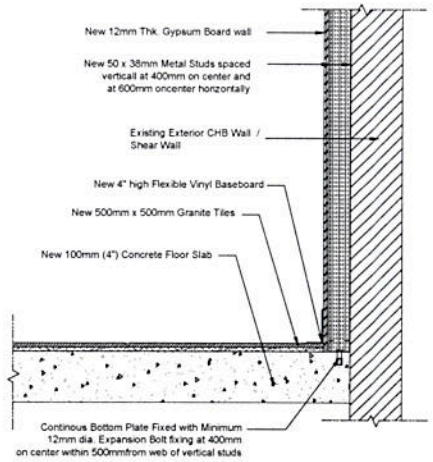

SD-2 A 02 DETAIL SECTION OF WALL CLADDING
SCALE 1:10MTS.

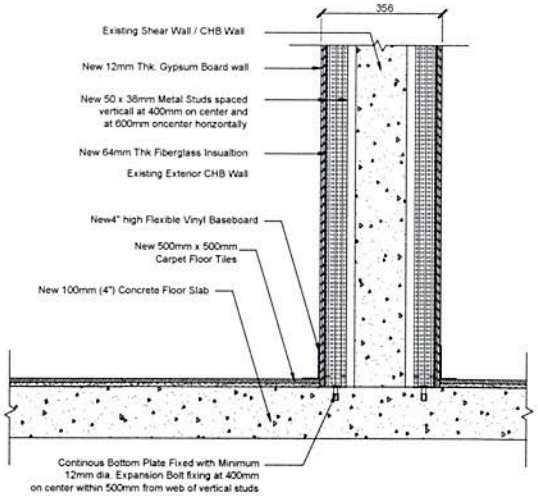

SD-3 A 02 DETAIL SECTION OF WALL CLADDING TO SHEAR WALL
SCALE 1:10MTS.

UNITED STATES EMBASSY
MANILA, PHILIPPINES

FACILITIES MAINTENANCE OFFICE

WARNING:
FOREIGN BUILDING OPERATIONS
U.S. Department of State, Washington, DC 20522-0630

Sensitive But Unclassified (SBU)

Rev/No	Revision note	Date	Sign

Project Title
NEW ARC BASEMENT SPACE AT SEAFRONT COMPOUND

Location
SEAFRONT COMPOUND

Release For Construction

SHEET CONTENT
DETAIL SECTION OF WALL CLADDING DOORS AND WINDOW SCHEDULE

Phase

Date 07/24/2014	CADD File Name
Designed	Drawn By CK
Checked	Drawing Number A - 02
Project Number	Sheet Number Sheet 02 of 04
Contract No.	