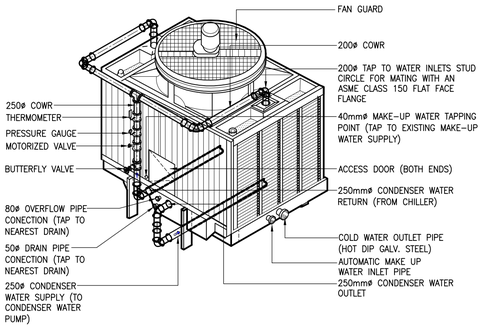

1 M3-01 COOLING TOWER PIPING CONNECTION DETAIL
NTS

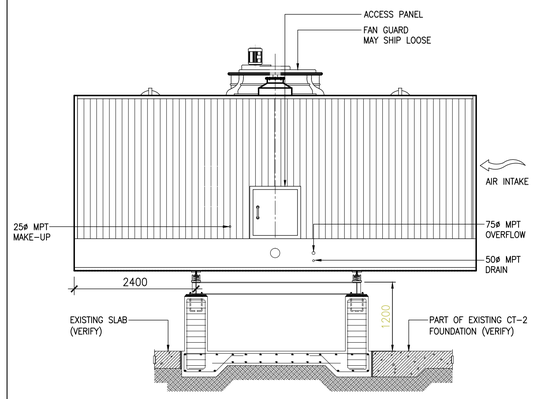

2 M3-01 COOLING TOWER CONNECTION DETAIL (CONCRETE DETAIL)
NTS

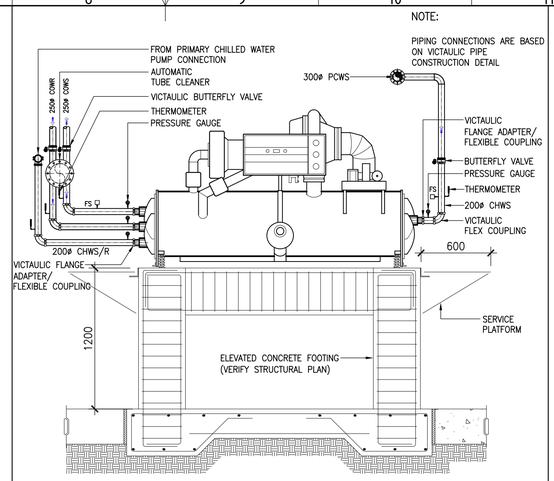

3 M3-01 WATER COOLED CHILLER PIPING CONNECTION DETAILS
NTS

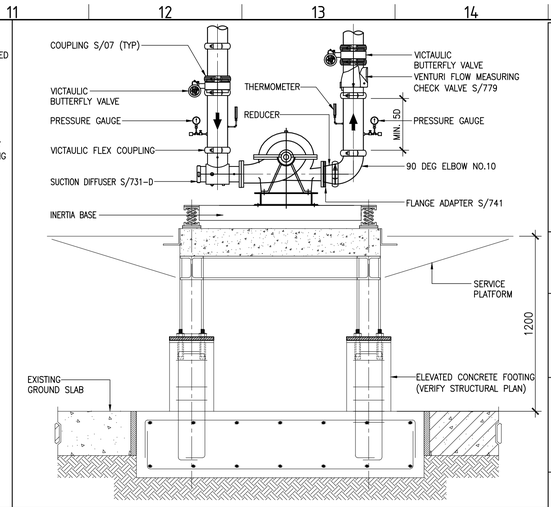

4 M3-01 CONDENSER CHILLED WATER PUMP PIPING CONECTION DETAIL (HORIZONTAL SPLIT CASE)
NTS

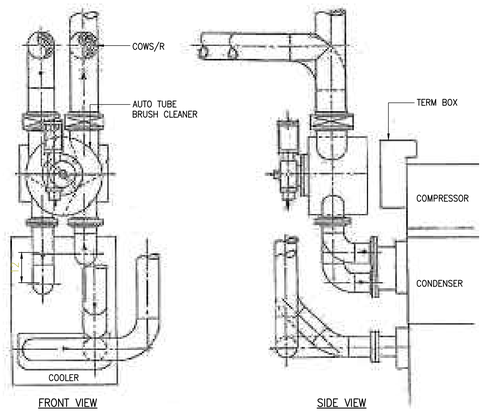

5 M3-01 AUTO TUBE BRUSH CLEANER INSTALLATION DETAIL
NTS

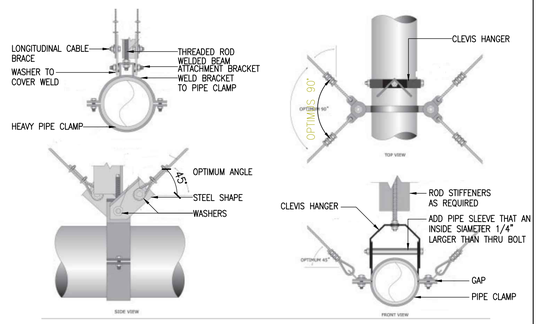

6 M3-01 SUSPENDED PIPING BRACING DETAILS
NTS

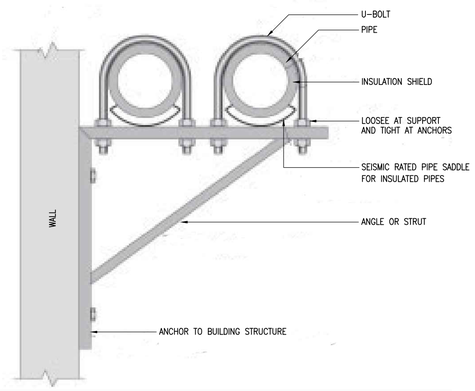

7 M3-01 WALL MOUNTED PIPING BRACING DETAILS
NTS

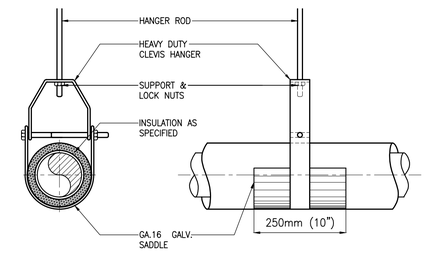

HANGER ROD SIZES				
PIPE SIZE	UP TO 50mm (2")	65 – 75 (2 1/2"–3")	100 – 125 (4" – 5")	150 – 300 (6" – 12")
HANGER ROD DIAMETER	10mm 3/8"ø	13mm 1/2"ø	16mm 5/8"ø	22mm 7/8"ø

HANGER SPACING												
PIPE SIZE	25mm 1"	30mm 1 1/4"	40mm 1 1/2	50mm 2"	65mm 2 1/2"	75mm 3"	100mm 4"	125mm 5"	150mm 6"	200mm 8"	250mm 10"	300mm 12"
MAXIMUM SPACING	2100 7'	2400 8'	2700 9'	3000 10'	3300 11'	3600 12'	4200 14'	4800 16'	5100 17'	5700 19'	5600 22'	6900 23'

8 M3-01 PIPE HANGER DETAIL
NTS

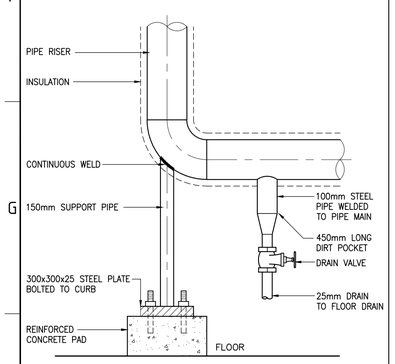

9 M3-01 PIPE BASE SUPPORT
NTS

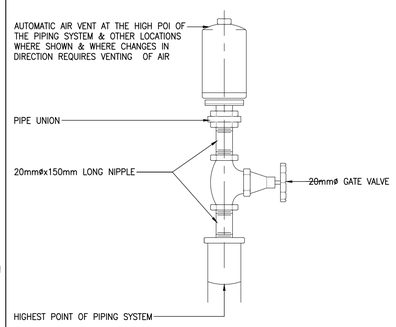

10 M3-01 AUTOMATIC AIR VENT
NTS

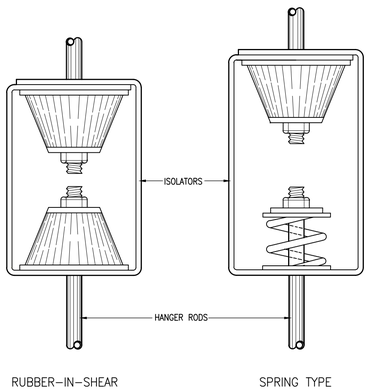

11 M3-01 VIBRATION ISOLATORS HANGER DETAIL
NTS

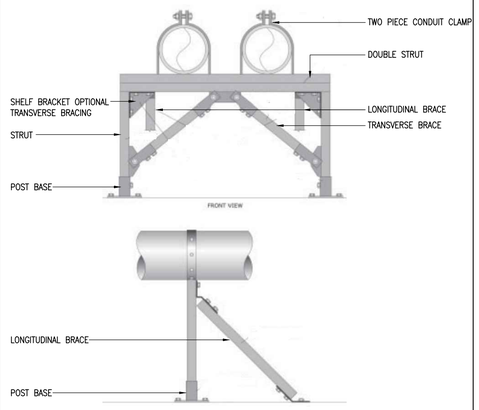

12 M3-01 FLOOR MOUNTED PIPING BRACING DETAILS
NTS

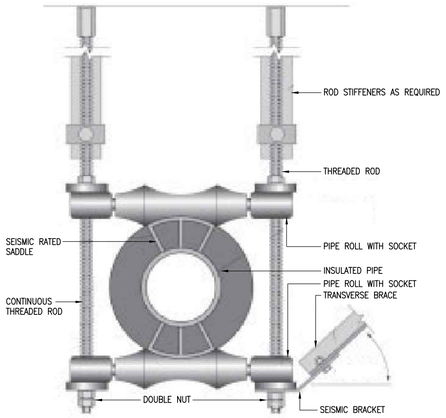

13 M3-01 SUSPENDED WITH DOUBLE ROLLER SUPPORT SYSTEM
NTS

FOR TENDER

UNITED STATES EMBASSY
MANILA, PHILIPPINES

FACILITIES MANAGEMENT

WARNING:
This document is the property of the U.S. Government. Further reproduction and/or distribution is prohibited without the express written permission of:
FOREIGN BUILDING OPERATIONS
U.S. Department of State, Washington, DC, 20522-0620
Information on this document is not to be altered except with the written approval of the individual whose seal appears hereon.

SENSITIVE BUT UNCLASSIFIED

Engineer
MEINHARDT
25th Floor Chatham House 116 Valero cor. V.A. Rufino St. Salcedo Village, Makati City
Tels. (632) 887-1391 E-mail mpi@meinhardt.com.ph
Fax (632) 887-1172

OSCAR V. RELUCIO
PROFESSIONAL MECHANICAL ENGINEER

PRC Reg. No: 2886 PTR No: 3178285
Date: JANUARY 04, 2012 Place: MAKATI CITY

APPROVED BY :

DISCIPLINE	INITIAL	SIGNATURE	DATE
SFM	PLS		
DFM	RLW		
CIVIL/STRL			
ELECT'L			
MECH'L			

RevNo	Revision note	Date	Sign.

Project Title
US EMBASSY MAIN CHILLER PLANT ADDITION

Location
ROXAS BOULEVARD, PHILIPPINES

Release For Construction:
FMM FMS

SHEET CONTENT
MECHANICAL SERVICES MISCELLANEOUS DETAILS 1

Phase
☐ CONCEPT ☐ 35% ☐ 60% ☐ 90% ■ 100% ☐ FINAL

Date 29OCT12	CADD File Name
Designed ESL	Drawn By CTF
Checked JCC/OVR	Drawing Number M3-01
Project Number MP1044	Sheet Number Sheet 6 of 7
Contract No. -	