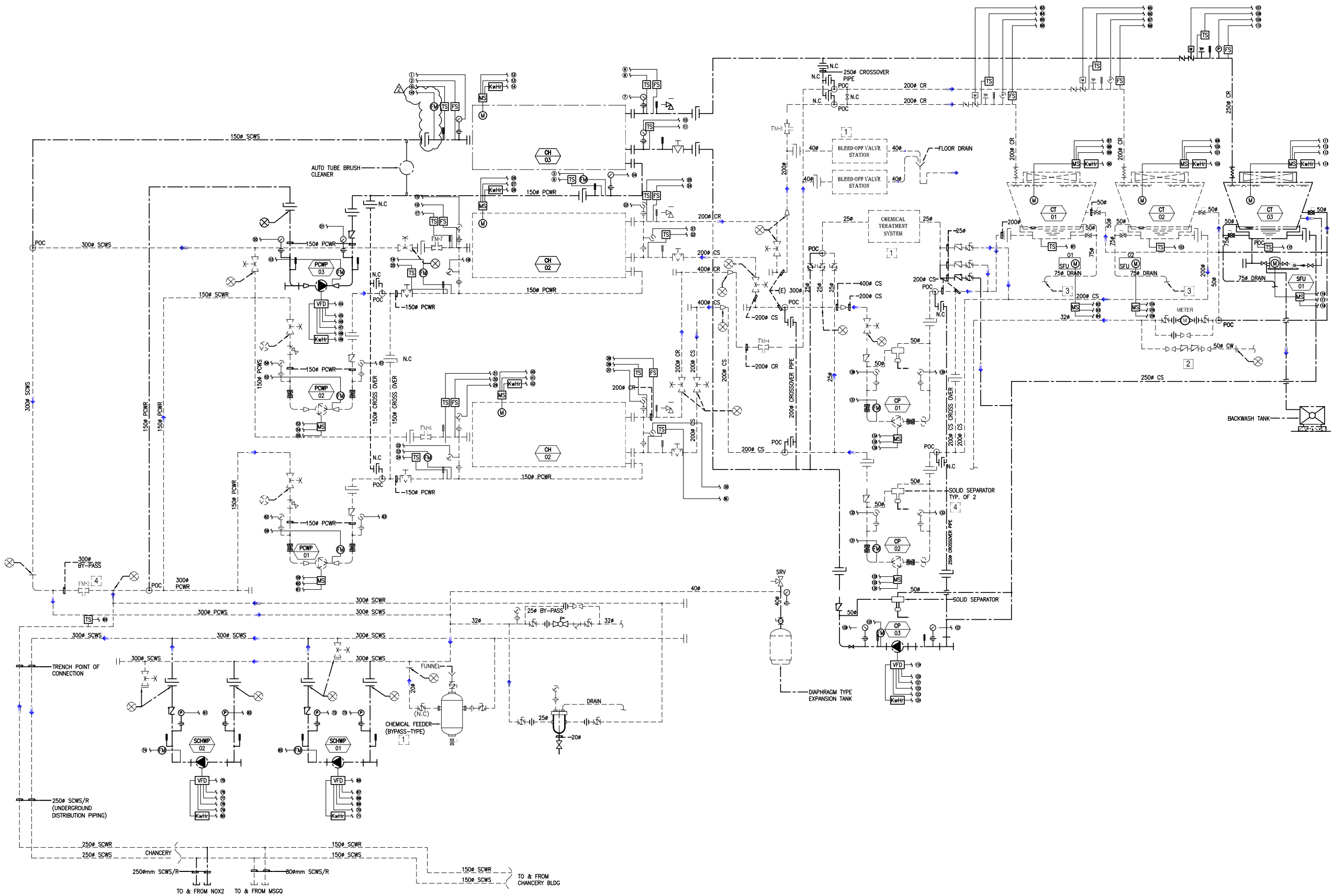

1 EC2-02a PROPOSED CHILLER PLANT MANAGER SYSTEM CONTROL DIAGRAM

NTS

FOR TENDER

UNITED STATES EMBASSY
MANILA, PHILIPPINES

FACILITIES MANAGEMENT

WARNING:
This document is the property of the U.S. Government. Further reproduction and/or distribution is prohibited without the express written permission of:
FOREIGN BUILDING OPERATIONS
U.S. Department of State, Washington, DC 20522-0620
Information on this document is not to be altered except with the written approval of the individual whose seal appears hereon.

SENSITIVE BUT UNCLASSIFIED

Engineer
MEINHARDT
25th Floor Chatham House 116 Valero cor. V.A. Rufino St. Salcedo Village, Makati City
Tels. (632) 887-1391 E-mail mpl@meinhardt.com.ph
Fax (632) 887-1172

PRC Reg. No:	PTR No:
Date:	Place:

APPROVED BY :

DISCIPLINE	INITIAL	SIGNATURE	DATE
SFM	PLS		
DFM	RLW		
CIVIL/STRL			
ELECT'L			
MECH'L			

RevNo	Revision note	Date	Sign.
2	ELECTRONIC TYPE FLOW METER ADDED	19DEC12	
1	UPDATED SCHEMATIC	06SEP12	

Project Title

US EMBASSY MAIN CHILLER PLANT ADDITION

Location

ROXAS BOULEVARD, PHILIPPINES

Release For Construction:

FMM | FMS

SHEET CONTENT

ELECTRONICS SERVICES
PROPOSED CHILLER PLANT MANAGER
SYSTEM CONTROL DIAGRAM - A

Phase

☐ CONCEPT ☐ 35% ☐ 60% ☐ 90% ■ 100% ☐ FINAL

Date 29OCT12	CADD File Name -
Designed PGL	Drawn By MMN
Checked RCM	Drawing Number EC2-02a
Project Number MP1044	Sheet Number Sheet 4 of 7
Contract No. CONTRACT_NO	