1. Proposed New Security Reinforced Concrete Planter Boxes Work

To provide the following New Security Reinforced Concrete Planter Boxes Work to include but not limited to:

1.1. To fabricate and install on site 17nos of steel reinforced concrete planter box as per attached detailed specification on the existing city council's walkway.
1.2. The planter boxes external surface shall be finish in shanghai plaster to match existing embassy chancery building shanghai plaster finish.
1.3. Each new planter box shall have a drainage point of 1"dia. underground G.I. pipe to be connected back into nearest drain.
1.4. To supply and plant 51nos of Bougainville plants (3nos in each planter box) of 3feet high.
1.5. To supply and install 2 layers of permeable layers at the bottom of the planter box, 300mm deep of hardcore granite stone, 400mm of course sand and 200mm of top soil in each planter box.
1.6. Contractor shall be responsible to coordinate with DBKL (Dewan Bandaraya Kuala Lumpur) for the work permit to do the works in the affected area if there is a need to close part of the U-Thant Road for machineries and heavy vehicle.
1.7. Contractor shall be responsible to provide all safety and warning signs as well as to provide a safe route for pedestrians to ensure safety of pedestrians accessing the road during the works.
1.8. Contractor shall make good and repair all damages to site in the affected work area to match existing finish by DBKL.
1.9. Contractor shall consult DBKL representative and get their approval on the proposed walkway materials for making good and repairs of damages to site.
1.10. Contractor to provide all labor, materials and tools to complete this work.
1.11. To provide a dimensioned sketch for consideration of the tenants in the bid reply if there is any change in the proposed sketch dimensions.
1.12. Clean work area upon completion of work and provide final clean up and removal of all debris / waste from completed work area.

2. Contractor's General Requirements

Requirements to include but not limited to the following:

2.1. Contractor shall comply to the "**GENERAL CONSTRUCTIONS CONTRACT SPECIFICATIONS DOCUMENT"** attached.
2.2. Contractor to ensure all damages to work site are fully repaired and make good prior to final handing over to include touching up of affected work areas (if any).
2.3. To clear, clean up and remove all debris / waste from compound.

3. Safety and Security Procedures

3.1. All workers IC numbers and names to be submitted 72hrs in advance for security access submission prior to start of work on site.
3.2. Contractor is responsible to update project Supervising Officer on the works schedule and the escort requirement on a daily basis.
3.3. Industry recognized safety standard, including ladders, must be followed.

4. Notes

4.1. Bids shall be returned in sealed envelope to the Front Guard House, US Embassy Kuala Lumpur latest by **12noon on XXXXXXXXXXXXXXXXXX** and attention to:

Ascher, Brian D,
AGSO,
General Services Office,
US Embassy Kuala Lumpur.

4.2. Final acceptance of all works by Facility Manager or his representative.

5. Attachment 1: Proposed locations of the security planter boxes

6. Attachment 2: Specifications for reinforced concrete planter box

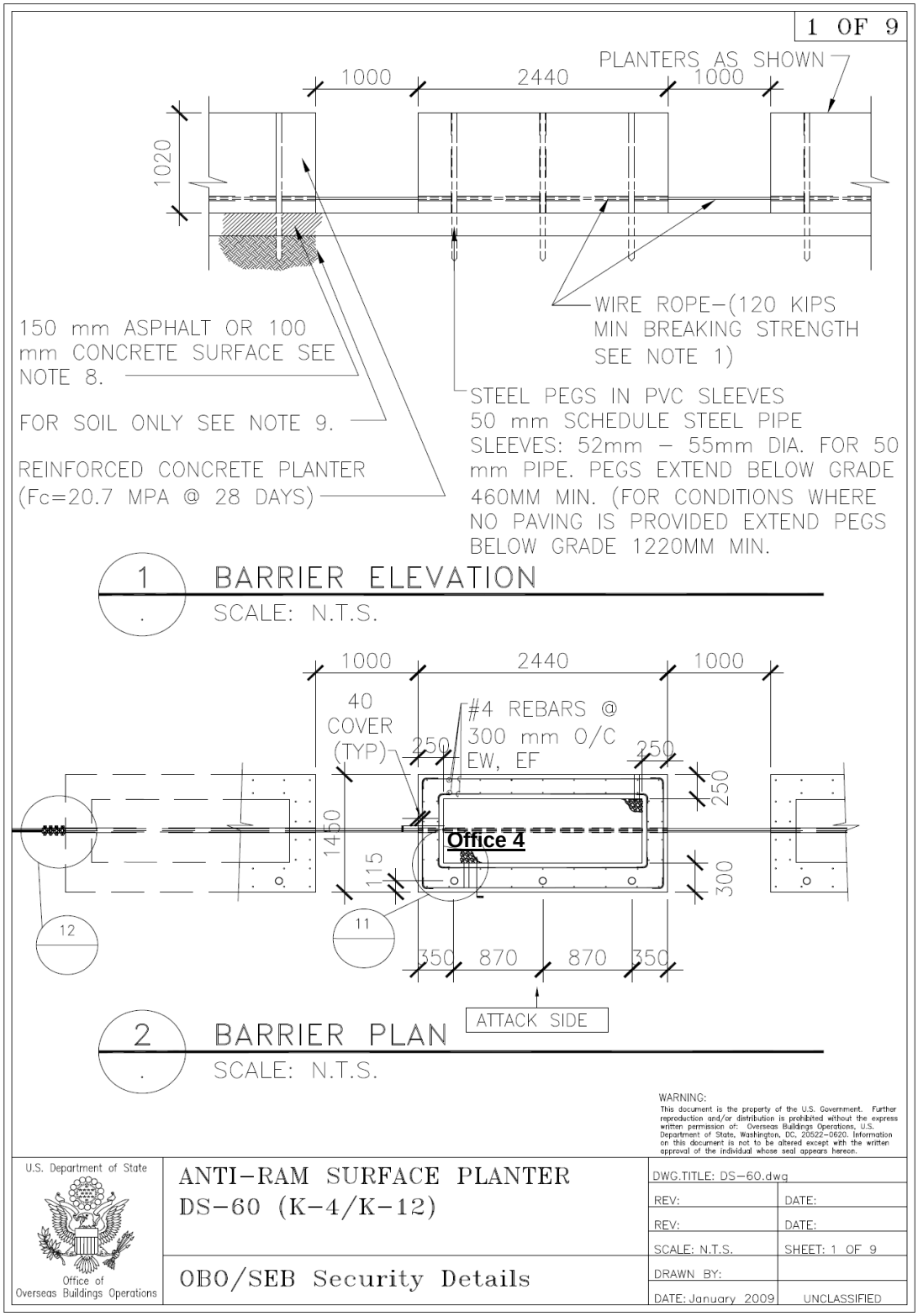

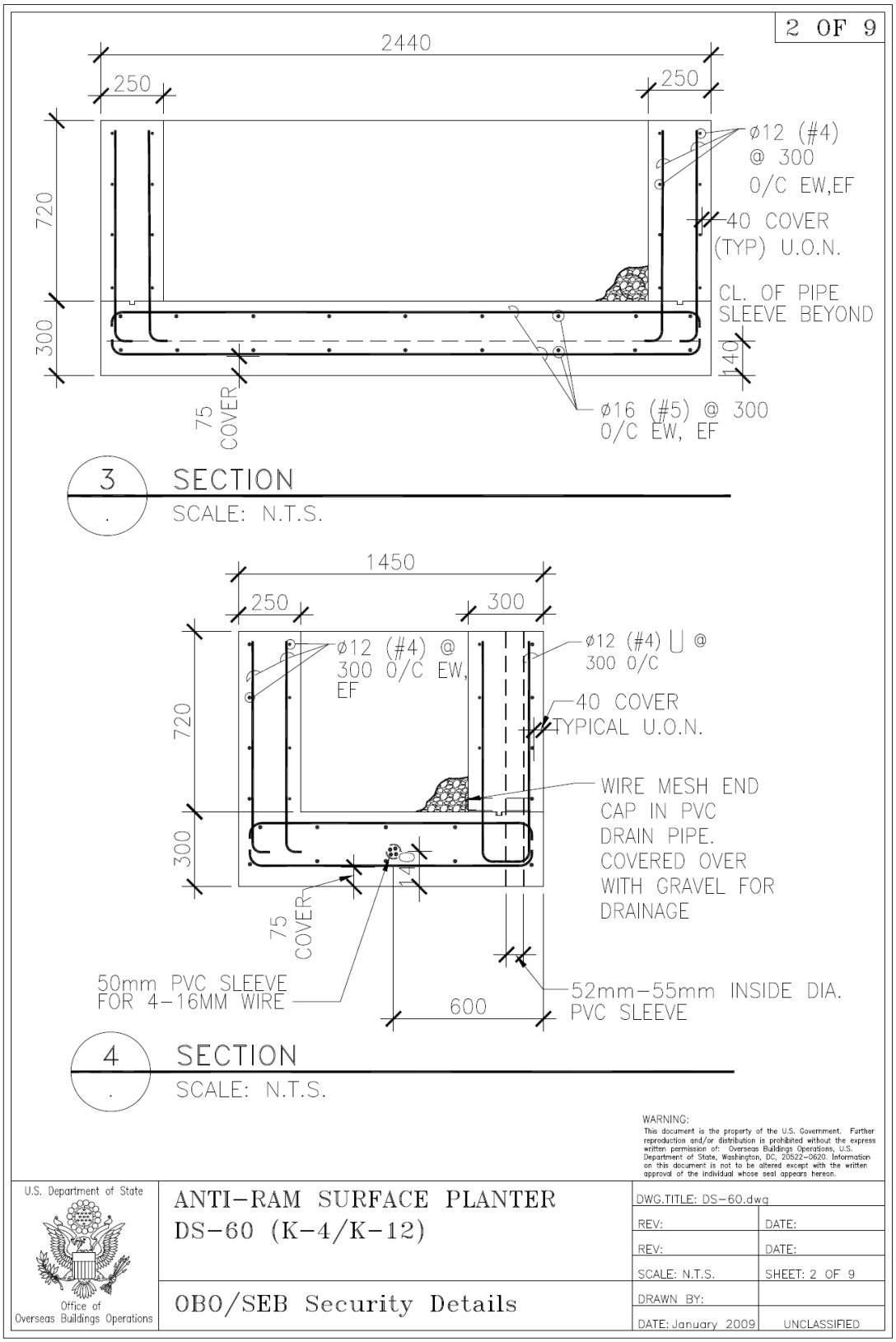
2 OF 9
2440
250
250
720
300
ø12 (#4) @ 300 O/C EW,EF
40 COVER (TYP) U.O.N.
CL. OF PIPE SLEEVE BEYOND
140
75 COVER
ø16 (#5) @ 300 O/C EW, EF
3
SECTION
SCALE: N.T.S.
1450
250
300
720
300
ø12 (#4) @ 300 O/C EW, EF
ø12 (#4) @ 300 O/C
40 COVER TYPICAL U.O.N.
WIRE MESH END CAP IN PVC DRAIN PIPE. COVERED OVER WITH GRAVEL FOR DRAINAGE
140
75 COVER
50mm PVC SLEEVE FOR 4-16MM WIRE
600
52mm-55mm INSIDE DIA. PVC SLEEVE
4
SECTION
SCALE: N.T.S.
WARNING:
This document is the property of the U.S. Government. Further reproduction and/or distribution is prohibited without the express written permission of: Overseas Buildings Operations, U.S. Department of State, Washington, DC, 20522-0620. Information on this document is not to be altered except with the written approval of the individual whose seal appears hereon.
U.S. Department of State
Office of Overseas Buildings Operations
ANTI-RAM SURFACE PLANTER
DS-60 (K-4/K-12)
OBO/SEB Security Details
DWG.TITLE: DS-60.dwg
REV:
DATE:
REV:
DATE:
SCALE: N.T.S.
SHEET: 2 OF 9
DRAWN BY:
DATE: January 2009
UNCLASSIFIED

3 OF 9

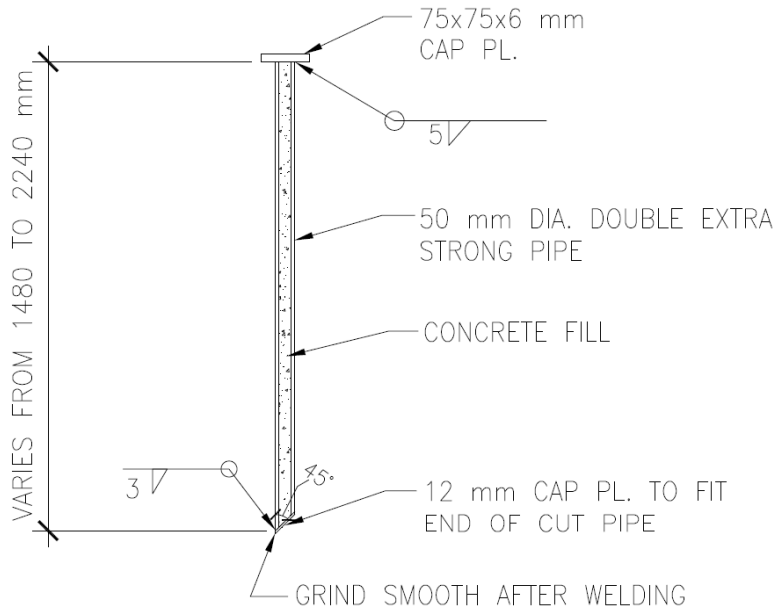

5 . STEEL PEG
SCALE: N.T.S.

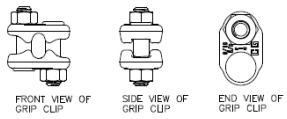

6 . FIST CABLE CLAMPS
SCALE: N.T.S.

WARNING:
This document is the property of the U.S. Government. Further reproduction and/or distribution is prohibited without the express written permission of: Overseas Buildings Operations, U.S. Department of State, Washington, DC, 20522-0620. Information on this document is not to be altered except with the written approval of the individual whose seal appears hereon.

U.S. Department of State Office of Overseas Buildings Operations	ANTI-RAM SURFACE PLANTER DS-60 (K-4/K-12)	DWG.TITLE: DS-60.dwg	
		REV:	DATE:
		REV:	DATE:
		SCALE: N.T.S.	SHEET: 3 OF 9
	OBO/SEB Security Details	DRAWN BY:	
		DATE: January 2009	UNCLASSIFIED

4 OF 9

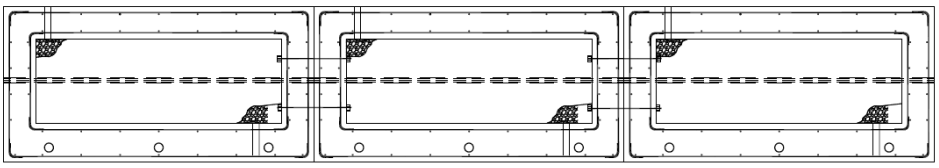

NOTE:
FOR THE K12 PLANTER USE 1" DIAMETER ALLOY STEEL THREADED ROD 4140B-7. ROD MUST MEET ASTM A-193 B7 SPECIFICATION (ULTIMATE STRENGTH = 125,000 PSI). HOLES FOR RODS MUST BE DRILLED AFTER PLANTERS HAVE BEEN PLACED IN FINAL CONDITION.

7 . TYPICAL K-12 CONFIGURATION

SCALE: N.T.S.

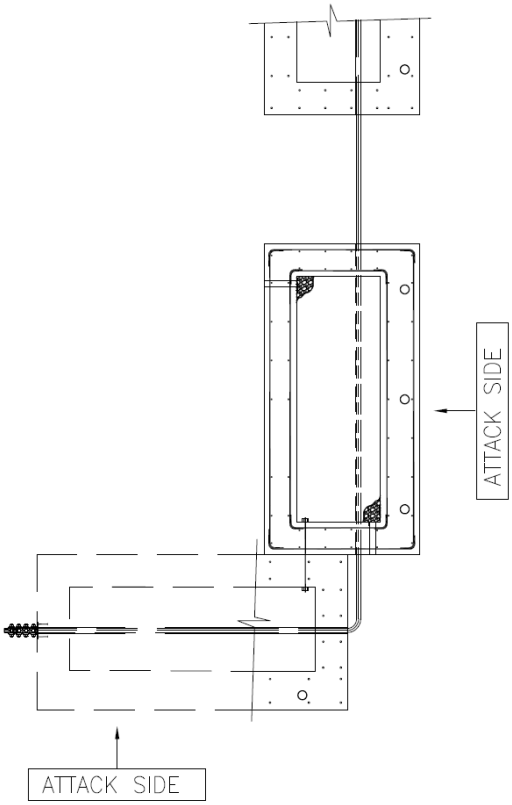

8 . K12 90° CORNER OF PLANTERS

SCALE: N.T.S.

WARNING:
This document is the property of the U.S. Government. Further reproduction and/or distribution is prohibited without the express written permission of: Overseas Buildings Operations, U.S. Department of State, Washington, DC, 20522-0620. Information on this document is not to be altered except with the written approval of the individual whose seal appears hereon.

U.S. Department of State Office of Overseas Buildings Operations	ANTI-RAM SURFACE PLANTER DS-60 (K-4/K-12)	DWG.TITLE: DS-60.dwg	
		REV:	DATE:
		REV:	DATE:
		SCALE: N.T.S.	SHEET: 4 OF 9
	OBO/SEB Security Details	DRAWN BY:	
		DATE: January 2009	UNCLASSIFIED

5 OF 9

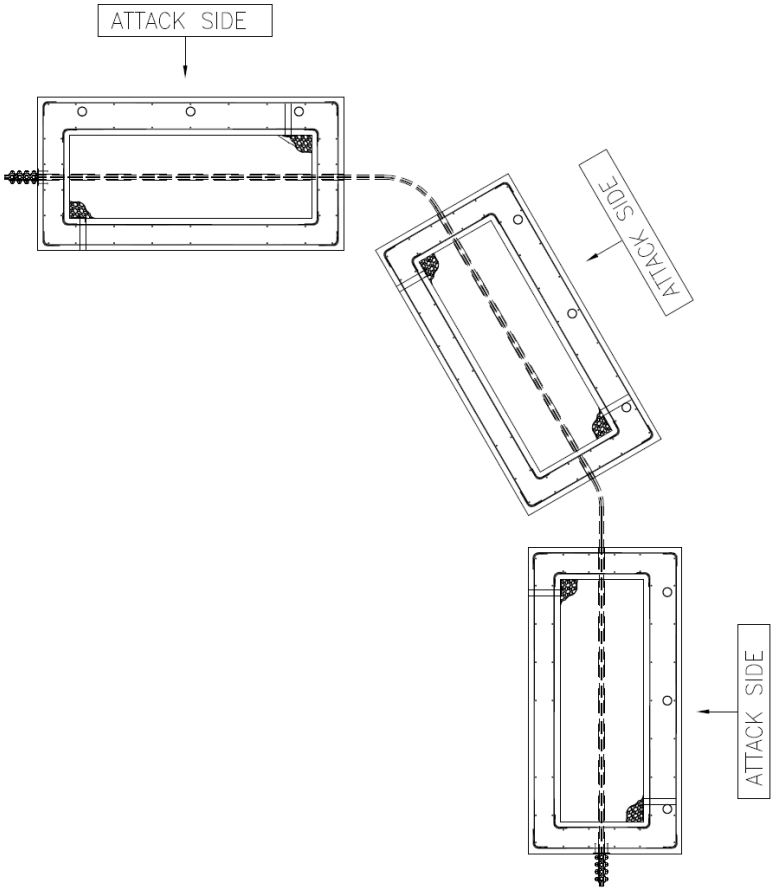

9 . K4 CURVED CORNER OF PLANTERS

SCALE: N.T.S.

WARNING:
This document is the property of the U.S. Government. Further reproduction and/or distribution is prohibited without the express written permission of: Overseas Buildings Operations, U.S. Department of State, Washington, DC, 20522-0620. Information on this document is not to be altered except with the written approval of the individual whose seal appears hereon.

U.S. Department of State Office of Overseas Buildings Operations	ANTI-RAM SURFACE PLANTER DS-60 (K-4/K-12)	DWG.TITLE: DS-60.dwg	
		REV:	DATE:
		REV:	DATE:
		SCALE: N.T.S.	SHEET: 5 OF 9
	OBO/SEB Security Details	DRAWN BY:	
		DATE: January 2009	UNCLASSIFIED

6 OF 9

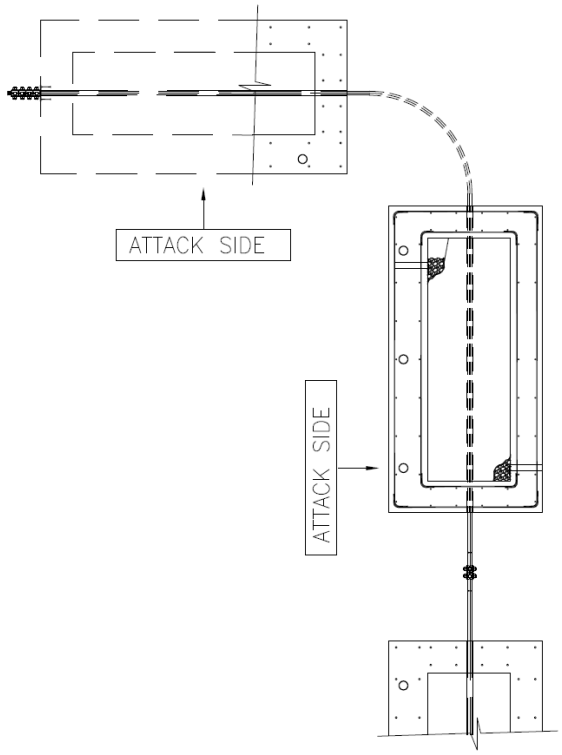

10 K4 90° CORNER OF PLANTERS
SCALE: N.T.S.

WARNING:
This document is the property of the U.S. Government. Further reproduction and/or distribution is prohibited without the express written permission of: Overseas Buildings Operations, U.S. Department of State, Washington, DC, 20522-0620. Information on this document is not to be altered except with the written approval of the individual whose seal appears hereon.

U.S. Department of State
Office of Overseas Buildings Operations

ANTI-RAM SURFACE PLANTER
DS-60 (K-4/K-12)

OBO/SEB Security Details

DWG.TITLE: DS-60.dwg	
REV:	DATE:
REV:	DATE:
SCALE: N.T.S.	SHEET: 6 OF 9
DRAWN BY:	
DATE: January 2009	UNCLASSIFIED

7 OF 9

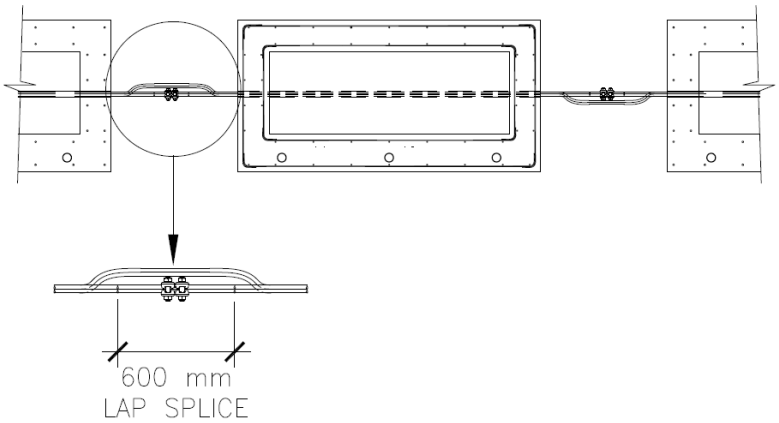

10 TYPICAL CABLE SPLICE
SCALE: N.T.S.

WARNING:
This document is the property of the U.S. Government. Further reproduction and/or distribution is prohibited without the express written permission of: Overseas Buildings Operations, U.S. Department of State, Washington, DC, 20522-0620. Information on this document is not to be altered except with the written approval of the individual whose seal appears hereon.

U.S. Department of State Office of Overseas Buildings Operations	ANTI-RAM SURFACE PLANTER DS-60 (K-4/K-12)	DWG.TITLE: DS-60.dwg	
		REV:	DATE:
		REV:	DATE:
		SCALE: N.T.S.	SHEET: 7 OF 9
	OBO/SEB Security Details	DRAWN BY:	
		DATE: January 2009	UNCLASSIFIED

8 OF 9

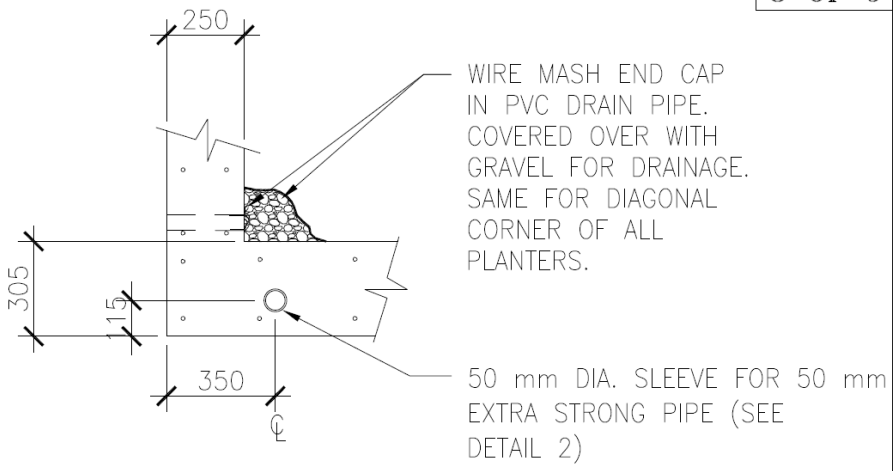

11 DETAIL
SCALE: N.T.S.

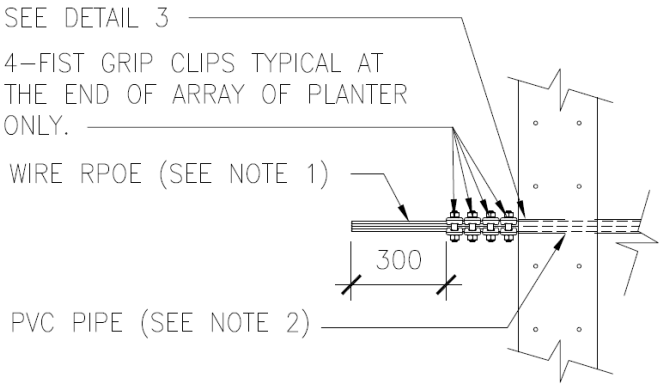

12 DETAIL
SCALE: N.T.S.

WARNING:
This document is the property of the U.S. Government. Further reproduction and/or distribution is prohibited without the express written permission of: Overseas Buildings Operations, U.S. Department of State, Washington, DC, 20522-0620. Information on this document is not to be altered except with the written approval of the individual whose seal appears hereon.

U.S. Department of State Office of Overseas Buildings Operations	ANTI-RAM SURFACE PLANTER DS-60 (K-4/K-12)	DWG.TITLE: DS-60.dwg	
		REV:	DATE:
		REV:	DATE:
		SCALE: N.T.S.	SHEET: 8 OF 9
	OBO/SEB Security Details	DRAWN BY:	
		DATE: January 2009	UNCLASSIFIED

9 OF 9

GENERAL NOTE:
THIS A SINGLE, PRE-CAST SURFACE PLANTER SYSTEM THAT CAN BE MADE LOCALLY IN APPROPRIATE QUANTITIES FOR PERIMETER ARRANGEMENTS. EMPLACEMENT CAN BE MADE WITH DIFFERENT SPACING AND CONNECTION DETAILS TO PROVIDE PROTECTION AGAINST A RANGE OF APPROACH IMPACT SPEEDS. THE DETAILED LAYOUT BEGINS WITH IDENTIFICATION OF REQUIRED PEDESTRIAN ACCESS LOCATIONS, HIGH SPEED RAMMING APPROACHES, SURFACE CONDITIONS FOR ANCHORAGE (ASPHALT, CONCRETE, SOIL) ETC.. MULTIPLE CABLES ARE USED RATHER TAN ONE LARGE CABLE FOR MANIPULATION AND INSTALLATION WHERE PEDESTRIAN ACCESS IS ANTICIPATED, THE CABLES CONNECTING THE PLANTERS MAY BE COVERED WITH A RAMP (PRE-CAST POURED IN PLACE AT SAME TIME AS PLANTERS, OR MADE OF ASPHALT, ETC.)

NOTES:
1. USE 4-16 mm DIA. WIRE ROPE MEETING ASTM 1023 STANDARDS.
2. USE 50mm PVC PIPE FOR 4-16mm DIA. CABLES.
3. MAXIMUM SPACING BETWEEN BOLLARDS FOR K-4 APPLICATIONS IS 1 METER.
4. USE G-429 FIST GRIP CLIPS BY THE CROSBY GROUP (SEE WWW.THECROSBYGROUP.COM)
5. ALL REINFORCING STEEL SHALL BE DEFORMED BILLET STEEL CONFORMING TO ASTM A615 GRADE 60.
6. ALL CONCRETE SHALL BE NORMAL WEIGHT CONCRETE WITH COMPRESSIVE STRENGTH 25 Mpa @28 DAYS.
7. ALL CONCRETE SHALL BE AIR ENTRAINED (5% ± 1).
8. WHEN PLANTER IS SET ON ASPHALT OR CONCRETE SURFACE THE PEGS TO HOLD PLANTER IN PLACE SHALL EXTEND A MINIMUM OF 450mm BELOW GRADE.
9. WHEN PLANTER IS SET ON SOIL ONLY (E.G. NO PAVING MATERIAL) THE STEEL PEGS TO HOLD PLANTER IN PLACE SHALL EXTEND A MINIMUM OF 1220mm BELOW GRADE.

WARNING:
This document is the property of the U.S. Government. Further reproduction and/or distribution is prohibited without the express written permission of: Overseas Buildings Operations, U.S. Department of State, Washington, DC, 20522-0620. Information on this document is not to be altered except with the written approval of the individual whose seal appears hereon.

U.S. Department of State Office of Overseas Buildings Operations	ANTI-RAM SURFACE PLANTER DS-60 (K-4/K-12)	DWG.TITLE: DS-60.dwg	
		REV:	DATE:
		REV:	DATE:
		SCALE: N.T.S.	SHEET: 9 OF 9
	OBO/SEB Security Details	DRAWN BY:	
		DATE: January 2009	UNCLASSIFIED

GENERAL CONSTRUCTIONS CONTRACT SPECIFICATIONS DOCUMENT

SECTION A - SUPPLIES OR SERVICES

AND PRICES/COSTS

A.1 CONTRACT PRICE

The contractor shall complete all work (including furnishing all labor, material, equipment and services) required under this contract for the bid firm fixed price and within the time specified. This price shall include all labor, materials, overhead (including insurance required by FAR 52.228-4, Workers' Compensation and War-Hazard Insurance, which shall be a direct reimbursement), and profit.

A.2 TYPE OF CONTRACT

This is a firm fixed price contract payable entirely in the currency indicated in the SF1442. No additional sums will be payable for any escalation in the cost of materials, equipment or labor, or because of the contractor's failure to properly estimate or accurately predict the cost or difficulty of achieving the results required. The Government will not adjust the contract price due to fluctuations in currency exchange rates. The Government will only make changes in the contract price or time to complete due to changes made by the Government in the work to be performed, or by delays caused by the Government.

The Government will make payments based on quantities and unit prices only to the extent specifically provided in the contract.

SECTION B - DESCRIPTION/SPECIFICATIONS

STATEMENT OF WORK

B.1 CHARACTER AND SCOPE OF WORK

The Contractor shall furnish and install all materials required by this contract.

B.2 DRAWINGS

In case of differences between small and large-scale drawings, the latter will govern. Where a portion of the work is drawn in detail and the remainder of the work is indicated in outline, the parts drawn in detail shall apply also to all other portions of the work.

SECTION C - INSPECTION AND ACCEPTANCE

C.1 FAR 52.252-2 CLAUSES INCORPORATED BY REFERENCE (FEB 1998)

This contract incorporates one or more clauses by reference, with the same force and effect as if they were given in full text. Upon request, the Contracting Officer will make their full text available. Also, the full text of a clause may be accessed electronically at http://acquisition.gov/far/index.html or, http://farsite.hill.af.mil/search.htm

These addresses are subject to change. If the Federal Acquisition Regulation (FAR) is not available at the locations indicated above, use the Dept. of State Acquisition Website at http://www.statebuy.state.gov/ to see the links to the FAR. You may also use an Internet "search engine" (such as, Yahoo, Excite, Alta Vista, etc.) to obtain the latest location of the most current FAR.

FEDERAL ACQUISITION REGULATION (48 CFR CH. 1)

52.246-12	INSPECTION OF CONSTRUCTION	AUG 1996

C.2 QUALITY ASSURANCE

The Contractor shall institute an appropriate inspection system set forth in a Quality Assurance Plan. The plan shall include checklists of duties to be carried out, ensuring these duties are carried out by the supervisory staff and senior employees, and carrying out weekly inspections to determine whether the various services are being performed according to the contract. The Contractor shall provide copies of the weekly inspection reports to the COR.

The Contractor shall correct and improve promptly any shortcomings and substandard conditions noted during inspections. The Contractor shall bring any conditions beyond the responsibility of the Contractor to the attention of the Contracting Officer or COR.

C.2.1 MONTHLY REPORT: For projects that are scheduled for more than 1 month of construction days, the Contractor shall submit to the COR a monthly progress report, along with the monthly invoice, summing up observations resulting from the inspections, progress, difficulties or irregularities encountered, resolution of problems, measures taken to improve conditions, recommendations, and other matters related to this contract.

C.2.2. INSPECTION BY GOVERNMENT: The COR, or his/her authorized representatives, will inspect from time to time the services being performed and the supplies furnished to determine whether work is being performed in a satisfactory manner, and that all supplies are of acceptable quality and standards.

The Contractor shall be responsible for any countermeasures or corrective action, within the scope of this contract, which may be required by the Contracting Officer as a result of such inspection.

C.3 SUBSTANTIAL COMPLETION

C.3.1 DEFINITIONS

(a) "Substantial Completion" means the stage in the progress of the work as determined and certified by the Contracting Officer in writing to the Contractor, on which the work (or a portion designated by the Government) is sufficiently complete and satisfactory. Substantial completion means that the property may be

occupied or used for the purpose for which it is intended, and only minor items such as touch-up, adjustments, and minor replacements or installations remain to be completed or corrected which:

1. do not interfere with the intended occupancy or utilization of the work, and
2. can be completed or corrected within the time period required for final completion.

(b) The "date of substantial completion" means the date determined by the Contracting Officer or authorized Government representative as of which substantial completion of the work has been achieved.

C.3.2 USE AND POSSESSION UPON SUBSTANTIAL COMPLETION

The Government shall have the right to take possession of and use the work upon substantial completion. Upon notice by the Contractor that the work is substantially complete (a Request for Substantial Completion) and an inspection by the Contracting Officer or an authorized Government representative (including any required tests), the Contracting Officer shall furnish the Contractor a Certificate of Substantial Completion. The certificate shall be accompanied by a Schedule of Defects listing items of work remaining to be performed, completed or corrected before final completion and acceptance. Failure of the Contracting Officer to list any item of work shall not relieve the Contractor of responsibility for complying with the terms of the contract. The Government's possession or use upon substantial completion shall not be deemed an acceptance of any work under the contract.

C.4 FINAL COMPLETION AND ACCEPTANCE

C.4.1 DEFINITIONS

(a) "Final completion and acceptance" means the stage in the progress of the work as determined by the Contracting Officer and confirmed in writing to the Contractor, at which all work required under the contract has been completed in a satisfactory manner, subject to the discovery of defects after final completion, and except for items specifically excluded in the notice of final acceptance.

(b) The "date of final completion and acceptance" means the date determined by the Contracting Officer when final completion of the work has been achieved, as indicated by written notice to the Contractor.

C.4.2 FINAL INSPECTION AND TESTS

The Contractor shall give the Contracting Officer at least five (5) days advance written notice of the date when the work will be fully completed and ready for final inspection and tests. Final inspection and tests will be started not later than the date specified in the notice unless the Contracting Officer determines that the work is not ready for final inspection and so informs the Contractor.

C.4.3 FINAL ACCEPTANCE

If the Contracting Officer is satisfied that the work under the contract is complete (with the exception of continuing obligations), the Contracting Officer shall issue to the Contractor a notice of final acceptance and make final payment upon:

(a) satisfactory completion of all required tests,

(b) a final inspection that all items by the Contracting Officer listed in the Schedule of Defects have been completed or corrected and that the work is finally complete (subject to the discovery of defects after final completion), and

(c) submittal by the Contractor of all documents and other items required upon completion of the work, including a final request for payment (Request for Final Acceptance).

SECTION D - DELIVERIES OR PERFORMANCE

D.1 FAR 52.252-2 CLAUSES INCORPORATED BY REFERENCE (FEB 1998)

This contract incorporates one or more clauses by reference, with the same force and effect as if they were given in full text. Upon request, the Contracting Officer will make their full text available. Also, the full text of a clause may be accessed electronically at: http://acquisition.gov/far/index.html or, http://farsite.hill.af.mil/search.htm

These addresses are subject to change. If the Federal Acquisition Regulation (FAR) is not available at the locations indicated above, use the Dept. of State Acquisition Website at http://www.statebuy.state.gov/ to see the links to the FAR. You may also use an Internet "search engine" (such as, Yahoo, Excite, Alta Vista, etc.) to obtain the latest location of the most current FAR.

FEDERAL ACQUISITION REGULATION (48 CFR CH. 1)

52.242.14	SUSPENSION OF WORK	APR 1984

D.2 52.211-10 COMMENCEMENT, PROSECUTION, AND COMPLETION OF WORK (APR 1984)

The Contractor shall be required to:

(a) commence work under this contract within ***the contractually agreed*** days after the date the Contractor receives the notice to proceed,

(b) prosecute the work diligently, and

(c) complete the entire work ready for use not later than ***[Note to Contracting Officer: # of days after Notice to Proceed must match with block #11 on SF1442***]. The time stated for completion shall include final cleanup of the premises and completion of "punch list" items.

D.3 LIQUIDATED DAMAGES

D.3.1 52.211-12 LIQUIDATED DAMAGES - CONSTRUCTION (SEP 2000)

(a) If the Contractor fails to complete the work within the time specified in the contract, or any extension, the Contractor shall pay liquidated damages to the Government in the amount of ***[Note to Contracting Officer: insert a specific amount – this cannot be expressed as a percentage]*** for each day of delay until the work is completed or accepted.

(b) If the Government terminates the Contractor's right to proceed, liquidated damages will continue to accrue until the work is completed. These liquidated damages are in addition to excess costs of repurchase under the Default clause.

D.3.2. ASSESSMENT AND APPORTIONMENT OF LIQUIDATED DAMAGES

Liquidated damages will be assessed from the completion date indicated in the contract or extensions thereof to the date of substantial completion as actually achieved by the Contractor, as determined by the Contracting Officer.

D.4 CONTRACTOR'S SUBMISSION OF CONSTRUCTION SCHEDULES

(a) The time for submission of the schedules referenced in Section I, 52.236-15, "Schedules for Construction Contracts", paragraph (a), is hereby modified to reflect the due date for submission as "ten (10) days after receipt of an executed contract".

(b) These schedules shall include the time by which shop drawings, product data, samples and other submittals required by the contract will be submitted for approval.

(c) The Contractor shall revise such schedules (1) to account for the actual progress of the work, (2) to reflect approved adjustments in the performance schedule, and (3) as required by the Contracting Officer to achieve coordination with work by the Government and any separate contractors used by the Government. The Contractor shall submit a schedule which sequences work so as to minimize disruption at the job site.

(d) All schedules shall be in the English language and any system of dimensions (English or metric) shown shall be consistent with that used in the contract. No extension of time shall be allowed due to a delay by the Government in approving such deliverables if the Contractor has failed to act promptly and responsively in submitting its deliverables. The Contractor shall identify each deliverable as required by the contract.

D.5 ACCEPTANCE OF SCHEDULE

When the Government has accepted any time schedule, it shall be binding upon the Contractor. The completion date is fixed and may be extended only by a written contract modification signed by the Contracting Officer. Acceptance or approval of any schedule or revision thereof by the Government shall not (1) extend the completion date or obligate the Government to do so, (2) constitute acceptance or approval of any delay, or (3) excuse the Contractor from or relieve the Contractor of its obligation to maintain the progress of the work and achieve final completion by the established completion date.

D.6 NOTICE OF DELAY

If the Contractor receives a notice of any change in the work, or if any other conditions arise which are likely to cause or are actually causing delays which the Contractor believes may result in late completion of the project, the Contractor shall notify the Contracting Officer. The Contractor’s notice shall state the effect, if any, of such change or other conditions upon the approved schedule, and shall state in what respects, if any, the relevant schedule or the completion date should be revised. The Contractor shall give this notice not more than ten (10) days after the first event-giving rise to the delay or prospective delay. Only the Contracting Officer may make revisions to the approved time schedule.

D.7 NOTICE TO PROCEED

(a) After receiving and accepting any bonds or evidence of insurance, the Contracting Officer will issue the Contractor a Notice to Proceed. The Contractor shall then prosecute the work commencing and completing performance not later than the time period established in the contract.

(b) It is possible that the Contracting Officer may elect to issue the Notice to Proceed before receipt and acceptance of any bonds. Issuance of a Notice to Proceed by the Government before receipt of the required bonds or policies shall not be a waiver of the requirement to furnish these documents.

D.8 WORKING HOURS

All work shall be performed during ***weekdays only from 8.00am to 4.00pm*** except for the holidays identified below. Other hours, if requested by the Contractor, may be approved by the Contracting Officer's Representative. The Contractor shall give 24 hours in advance to COR who will consider any deviation from the hours identified above. Changes in work hours will not be a cause for a price increase.

(a) The Department of State observes the following days as holidays:

New Year's Day

Martin Luther King's Birthday

Washington's Birthday

Memorial Day

Independence Day

Labor Day

Columbus Day

Veterans Day

Thanksgiving Day

Christmas Day

[Affected local holidays observed by the Post]

Any other day designated by Federal law, Executive Order or Presidential Proclamation.

When any such day falls on a Saturday, the preceding Friday is observed; when any such day falls on a Sunday, the following Monday is observed. Observance of such days by Government personnel shall not be cause for additional period of performance or entitlement to compensation except as set forth in the contract. If the contractor's personnel work on a holiday, no form of holiday or other premium compensation will be reimbursed either as a direct or indirect cost, unless authorized pursuant to an overtime clause elsewhere in this contract.

D.9 EXCUSABLE DELAYS

The Contractor will be allowed time, not money, for excusable delays as defined in FAR 52.249-10, Default. Examples of such cases include:

(l) acts of God or of the public enemy,

(2) acts of the United States Government in either its sovereign or contractual capacity,

(3) acts of the government of the host country in its sovereign capacity,

(4) acts of another contractor in the performance of a contract with the Government,

(5) fires,

(6) floods,

(7) epidemics,

(8) quarantine restrictions,

(9) strikes,

(l0) freight embargoes,

(11) delays in delivery of Government furnished equipment and

(12) unusually severe weather.

In each instance, the failure to perform must be beyond the control and without the fault or negligence of the Contractor, and the failure to perform. Furthermore, the failure:

(1) must be one that the Contractor could not have reasonably anticipated and taken adequate measures to protect against,

(2) cannot be overcome by reasonable efforts to reschedule the work, and

(3) directly and materially affects the date of final completion of the project.

D.10 PRECONSTRUCTION CONFERENCE

A preconstruction conference will be held 10 days after contract award at ***the construction site*** to discuss the schedule, submittals, notice to proceed, mobilization and other important issues that affect construction progress.

SECTION E - CONTRACT ADMINISTRATION DATA

E.1 AUTHORITY OF CONTRACTING OFFICER

All work shall be performed under the general direction of the Contracting Officer, who alone shall have the power to bind the Government and to exercise the rights, responsibilities, authorities and functions vested by the contract.

E.2 MONITORING OF THE CONTRACTOR

E.2.1. 652.242-70 CONTRACTING OFFICER'S REPRESENTATIVE (COR) (AUG 1999)

(a) The Contracting Officer may designate in writing one or more Government employees, by position title, to take action for the Contracting Officer under this contract. Each designee shall be identified as a Contracting Officer's Representative (COR). Such designation(s) shall specify the scope and limitations of the authority so delegated; provided, that the designee shall not change the terms or conditions of the contract, unless the COR is a warranted Contracting Officer and this authority is delegated in the designation.

(b) The COR for this contract is the ***Facility Engineer.***

E.2.2 DUTIES

The COR is responsible for inspection and acceptance of services. These duties include review of Contractor invoices, including the supporting documentation required by the contract. The COR may provide technical advice, substantive guidance, inspections, invoice approval, and other purposes as deemed necessary under the contract. The COR is designated as the authority to act for the Contracting Officer in matters concerning technical clarification, random inspection of Contractor performance to ensure compliance with contract specifications and acceptance of the Contractor's performance under this contract. The COR will coordinate all work with the Contractor during the term of this contract. The COR is not authorized to alter the contract's terms, or conditions, including the design to budget parameter. Such changes must be authorized by the Contracting Officer in a written modification to the contract. Reference to the project architect within documents incorporated into this contract shall be read to mean COR.

E.3 PAYMENT

E.3.1 DETAIL OF PAYMENT REQUESTS

Each application for payment shall cover the value of labor and materials completed and in place, including a prorated portion of overhead and profit. The Government will make payments no more frequently than monthly, unless otherwise provided in this contract. The Contractor shall address invoices to the appointed COR for processing and further action.

E.3.3 PAYMENTS TO SUBCONTRACTORS

The Contractor shall make timely payment from the proceeds of the progress or final payment for which request is being made to subcontractors and suppliers following the Contractor's contractual arrangements with them.

E.3.4 EVALUATION BY THE CONTRACTING OFFICER

Following receipt of the Contractor's request for payment, and on the basis of an inspection of the work, the Contracting Officer shall make a determination as to the amount that is then due. If the Contracting Officer does not approve payment of the full amount applied for, less the retainage addressed in FAR 52.232-5, the Contracting Officer shall advise the Contractor of the reasons.

E.3.5 ADDITIONAL WITHHOLDING

The Government may withhold from payments due the Contractor any amounts as may be considered necessary to cover --

(a) Wages or other amounts due the Contractor's employees on this project;

(b) Wages or other amounts due employees of subcontractors on this project;

(c) Amounts due suppliers of materials or equipment for this project; and

(d) Any other amounts for which the Contractor may be held liable under this contract, including but not limited to the actual or prospective costs of correction of defective work and prospective liquidated damage when the Contractor has failed to make adequate progress.

This withholding is independent of monies retained by the Government under FAR 52.232-5, or otherwise as permitted to be retained under this contract.

E.3.6. PAYMENT

Under the authority of 52.232-27(a) the 14 day period identified in FAR 52.232-27(a)(1)(i)(A) is hereby changed to 30 days.

F. GOVERNING LAWS

F.1 GOVERNING LAW

The laws of the United States shall govern the contract and its interpretation.

F.2 LANGUAGE PROFICIENCY

The manager assigned by the contractor to superintend the work on-site, as required by Section I, 52.236-6, "Superintendence by the Contractor", shall be fluent in written and spoken English.

F.3 LAWS AND REGULATIONS

F.3.1 COMPLIANCE REQUIRED

The Contractor shall, without additional expense to the Government, be responsible for complying with all laws, codes, ordinances, and regulations applicable to the performance of the work, including those of the host country, and with the lawful orders of any governmental authority having jurisdiction. Host country authorities may not enter the construction site without the permission of the Contracting Officer. Unless otherwise directed by the

Contracting Officer, the Contractor shall comply with the more stringent of the requirements of such laws, regulations and orders and of the contract. In the event of a conflict between the contract and such laws, regulations and orders, the Contractor shall promptly advise the Contracting Officer of the conflict and of the Contractor's proposed course of action for resolution by the Contracting Officer.

F.3.2 LABOR, HEALTH AND SAFETY LAWS AND CUSTOMS

The Contractor shall comply with all local labor laws, regulations, customs and practices pertaining to labor, safety, and similar matters, to the extent that such compliance is not inconsistent with the requirements of this contract.

F.3.3 SUBCONTRACTORS

The Contractor shall give written assurance to the Contracting Officer that all subcontractors and others performing work on or for the project have obtained all requisite licenses and permits.

F.3.4 EVIDENCE OF COMPLIANCE

The Contractor shall submit proper documentation and evidence satisfactory to the Contracting Officer demonstrating compliance with this clause when directed by the Contracting Officer.

F.4 RESPONSIBILITY OF CONTRACTOR

F.4.1 DAMAGE TO PERSONS OR PROPERTY

The Contractor shall be responsible for all damages to persons or property that occur as a result of the Contractor's fault or negligence, and shall take proper safety and health precautions to protect the work, the workers, the public, and the property of others.

F.4.2 RESPONSIBILITY FOR WORK PERFORMED

The Contractor shall be responsible for all materials delivered and work performed until final completion and acceptance of the entire work, except for any completed unit of work which may have been accepted in writing under the contract.

F.5 CONSTRUCTION OPERATIONS

F.5.1 OPERATIONS AND STORAGE AREAS

(a) CONFINEMENT TO AUTHORIZED AREAS. The Contractor shall confine all operations (including storage of materials) on Government premises to areas authorized or approved by the Contracting Officer.

(b) VEHICULAR ACCESS. The Contractor shall, and in accordance with any regulations prescribed by the Contracting Officer, use only established site entrances and roadways.

F.5.2 USE OF PREMISES

(a) Occupied Premises. If the premises are occupied, the Contractor, its subcontractors, and their employees shall comply with the regulations promulgated by the Government governing access to, operation of, and conduct while in or on the premises and shall perform the work required under this contract in such a manner as not to unreasonably interrupt or interfere with the conduct of Government business.

(b) Requests from occupants. The Contractor shall refer any request from occupants of existing buildings to change the sequence of work to the Contracting Officer for determination.

(c) Access limited. The Contractor, its subcontractors and their employees shall not have access to or be admitted into any building or portion of the site outside the areas designated in this contract except with the permission of the Contracting Officer.

F.6 TEMPORARY FACILITIES AND SERVICES

The Contractor may erect temporary buildings (such as, storage sheds, shops, offices) and utilities only with the approval of the Contracting Officer. The cost of these temporary buildings is included in the contract fixed price. The temporary buildings and utilities shall remain the property of the Contractor and shall be removed by the Contractor at its expense upon completion of the work. With the written consent of the Contracting Officer, the buildings and utilities may be abandoned and need not be removed.

F.7 SAFETY

F.7.1 DOSAR 652.236-70 ACCIDENT PREVENTION (APR 2004)

(a) *General*. The contractor shall provide and maintain work environments and procedures which will safeguard the public and Government personnel, property, materials, supplies, and equipment exposed to contractor operations and activities; avoid interruptions of Government operations and delays in project completion dates; and, control costs in the performance of this contract. For these purposes, the contractor shall:

(1) Provide appropriate safety barricades, signs and signal lights;

(2) Comply with the standards issued by any local government authority having jurisdiction over occupational health and safety issues; and,

(3) Ensure that any additional measures the contracting officer determines to be reasonably necessary for this purpose are taken.

(4) For overseas construction projects, the contracting officer shall specify in writing additional requirements regarding safety if the work involves:

(i) Scaffolding;

(ii) Work at heights above two (2) meters;

(iii) Trenching or other excavation greater than one (1) meter in depth;

(iv) Earth moving equipment;

(v) Temporary wiring, use of portable electric tools, or other recognized electrical hazards. Temporary wiring and portable electric tools require the use of a ground fault circuit interrupter (GFCI) in the affected circuits; other electrical hazards may also require the use of a GFCI;

(vi) Work in confined spaces (limited exits, potential for oxygen less that 19.5 percent or combustible atmosphere, potential for solid or liquid engulfment, or other hazards considered to be immediately dangerous to life or health such as water tanks, transformer vaults, sewers, cisterns, etc.);

(vii) Hazardous materials – a material with a physical or health hazard including but not limited to, flammable, explosive, corrosive, toxic, reactive or unstable, or any operations which creates any kind of contamination inside an occupied building such as dust from demolition activities, paints, solvents, etc.; or

(viii) Hazardous noise levels.

(b) *Records*. The contractor shall maintain an accurate record of exposure data on all accidents incident to work performed under this contract resulting in death, traumatic injury, occupational disease, or damage to or theft of property, materials, supplies, or equipment. The contractor shall report this data in the manner prescribed by the contracting officer.

(c) *Subcontracts*. The contractor shall be responsible for its subcontractors' compliance with this clause.

(d) *Written program.* Before commencing work, the contractor shall:

(1) Submit a written plan to the contracting officer for implementing this clause. The plan shall include specific management or technical procedures for effectively controlling hazards associated with the project; and,

(2) Meet with the contracting officer to discuss and develop a mutual understanding relative to administration of the overall safety program.

(e) *Notification*. The contracting officer shall notify the contractor of any non-compliance with these requirements and the corrective actions required. This notice, when delivered to the contractor or the contractor's representative on site, shall be deemed sufficient notice of the non-compliance and corrective action required. After receiving the notice, the contractor shall immediately take corrective action. If the contractor fails or refuses to promptly take corrective action, the contracting officer may issue an order suspending all or part of the work until satisfactory corrective action has been taken. The contractor shall not be entitled to any equitable adjustment of the contract price or extension of the performance schedule on any suspension of work order issued under this clause.

F.8 SUBCONTRACTORS AND SUPPLIERS

F.8.1 CLAIMS AND ENCUMBRANCES

The Contractor shall satisfy as due all lawful claims of any persons or entities employed by the Contractor, including subcontractors, material men and laborers, for all labor performed and materials furnished under this contract, including the applicable warranty or correction period, unless the Government shall be directly liable by contract. The Contractor shall not at any time permit any lien, attachment, or other encumbrance to be entered against or to remain on the building(s), or the premises, whether public or private, or any portion thereof, as a result of nonperformance of any part of this contract.

F.8.2 APPROVAL OF SUBCONTRACTORS

(a) REVIEW AND APPROVAL. The Government reserves the right to review proposed subcontractors for a period of five (5) days before providing notice of approval or rejection of any or all subcontractors.

(b) REJECTION OF SUBCONTRACTORS. The Government reserves the right to reject any or all subcontractors proposed if their participation in the project, as determined by the Contracting Officer, may cause damage to the national security interests of the United States. The Contractor agrees to promptly replace any subcontractor rejected by the Government under this clause.

F.9 CONSTRUCTION PERSONNEL

F.9.1 REMOVAL OF PERSONNEL

The Contractor shall maintain discipline at the site and at all times take all reasonable precautions to prevent any unlawful, riotous, or disorderly conduct by or among those at the site. The contractor shall ensure the preservation of peace and protection of persons and property in the neighborhood of the project. The Contracting Officer may require, in writing, that the Contractor remove from the work any employee that the Contracting Officer deems incompetent, careless, insubordinate or otherwise objectionable, or whose continued employment on the project is deemed by the Contracting Officer to be contrary to the Government's interests.

F.9.2 CONSTRUCTION PERSONNEL SECURITY

After award of the contract, the Contractor shall have ten days to submit to the Contracting Officer a list of workers and supervisors assigned to this project (Biographic Data on Personnel) for the Government to conduct all necessary security checks. It is anticipated that security checks will take ***at least 1 day*** to perform. For each individual the list shall include:

Full Name

Place and Date of Birth

Current Address

Identification number

Failure to provide any of the above information may be considered grounds for rejection and/or re-submittal of the application. Once the Government has completed the security screening and approved the applicants, the Government will provide a badge to the individual for access to the site. The Government may revoke this badge at any time due to the falsification of data, or misconduct on site.

F.10 MATERIALS AND EQUIPMENT

F.10.1 SELECTION AND APPROVAL OF MATERIALS

(a) STANDARD TO QUALITY. All materials and equipment incorporated into the work shall be new and for the purpose intended, unless otherwise specified. All workmanship shall be of good quality and performed in a skillful manner that will withstand inspection.

(b) SELECTION BY CONTRACTOR. Where the contract permits the Contractor to select products, materials or equipment to be incorporated in the work, or where specific approval is otherwise required by the contract, the Contractor shall furnish a Submittal Register to the Contracting Officer, for approval. The Submittal Register shall include the names of the manufacturer, model number, and source of procurement of each such product, material or equipment, together with other pertinent information concerning the nature, appearance, dimensions, performance, capacity, and rating. To ensure a timely review the Contractor shall provide a submittal register ten days after contract award showing when shop drawings, samples, or submittals shall be made. When directed to do so, the Contractor shall submit samples for approval at the Contractor's expense, with all shipping charges prepaid. Installation or use of any products, materials or equipment without the required approval shall be at the risk of subsequent rejection.

F.10.2 CUSTODY OF MATERIALS

The Contractor shall be responsible for the custody of all materials received for incorporation into the project, including Government furnished materials, upon delivery to the Contractor or to any person for whom it is responsible, including subcontractors. The Contractor shall deliver all such items to the site as soon as practicable. If required by the Contracting Officer, the Contractor shall clearly mark in a manner directed by the Contracting Officer all items of which the Contractor has custody but which have not been delivered or secured at the site, clearly indicating the use of such items for the U.S. Government project.

F.10.3 BASIS OF CONTRACT PRICE

The contract price is based on the use of the materials, products and equipment specified in the contract, except for substitutions or "Or-Equal" items proposed by the Contractor which have been specifically approved by the Government at the time of execution of the contract. Any substitution approved by the Government after execution of the contract shall be subject to an appropriate adjustment of the contract price.

F.10.4 SUBSTITUTIONS

(a) PRIOR APPROVAL REQUIRED. The Contractor must receive approval in writing from the Contracting Officer before substitutions (1) proposed by the Contractor but not yet approved at the time of execution of the contract, or (2) proposed by the Contractor after execution of the contract may be used in the project. Sufficient information to permit evaluation by the Government must accompany any substitution request including but not limited to the reasons for the proposed substitution and data concerning the design, appearance, performance, composition, and relative cost of the proposed substitute. The Contractor shall make requests for substitutions in a timely manner to permit adequate evaluation by the Government. If, in the Contracting Officer's opinion, the use of such substitute items is not in the best interests of the Government, the Contractor must obtain the items originally specified with no adjustment in the contract price or completion date.

(b) APPROVAL THROUGH SHOP DRAWINGS. The Contractor may propose substitutions of materials in the submittal of shop drawings, provided such substitution is specifically requested in writing in the transmittal of the shop drawings to the Contracting Officer. Such substitution requests must be made in a timely manner and supported by the required information.

(c) FINAL APPROVAL ON DELIVERY. Acceptance or approval of proposed substitutions under the contract are conditioned upon approval of items delivered at the site or approval by sample. Approval by sample shall not limit the Government's right to reject material after delivery to the site if the material does not conform to the approved sample in all material respects.

F.10.5 "OR-EQUAL CLAUSE"

References in the Specifications/Statement of Work to materials, products or equipment by trade name, make, or catalog number, or to specific processes, shall be regarded as establishing a standard of quality and shall not be construed as limiting competition. The Contractor may propose for approval or rejection by the Contracting Officer the substitution of any material, product, equipment or process that the Contractor believes to be equal to or better than that named in the Specifications/Statement of Work, unless otherwise specifically provided in this contract.

F.10.6 USE AND TESTING OF SAMPLES

("Samples" include materials and equipment.)

(a) USE. The Contractor shall send approved samples not destroyed in testing to the Contracting Officer. Those which are in good condition will be marked for identification and may be used in the work. Materials and equipment incorporated in the work shall match the approved samples within any specified tolerances. Other samples not destroyed in testing or not approved will be returned to the Contractor at its expense if so requested.

(b) FAILURE OF SAMPLES. If a sample fails to pass the specified tests described in this contract, any further samples of the same brand or make of that material or equipment may not be considered for use in performance under this contract.

(c) TAKING AND TESTING OF SAMPLES. Samples delivered on the site or in place may be taken by the Contracting Officer for additional testing by the Government outside of those required by the Contract documents. Samples failing to meet contract requirements will automatically void previous approvals of the items tested. The Contractor shall replace such materials or equipment found not to have met contract requirements, unless the Contracting Officer determines it to be in the Government's interest to accept the non-conforming materials or equipment with an appropriate adjustment of the Contract price as determined by the Contracting Officer.

(d) COST OF ADDITIONAL TESTING BY THE GOVERNMENT. When additional tests of samples are performed, only one test of each sample proposed for use will be made at the expense of the Government. Samples which do not meet contract requirements will be rejected. Further testing of additional samples, if required, will be made at the expense of the Contractor.

F.11 IMPORTED MATERIALS, EQUIPMENT, AND PERSONNEL

F.11.1 SHIPMENT AND CUSTOMS CLEARANCE

(a) Costs to be borne by Contractor. The Contractor is responsible for paying all charges incurred in obtaining materials that must be imported for the project and in transporting the materials from their place or origin to the construction site. Moving costs shall include, but not necessarily be limited to, packing, handling, cartage, overland freight, ocean freight, transshipment, port, unloading, customs clearance and duties (other than customs duties specified below), unpacking, storage, and all other charges including administrative costs in connection with obtaining and transporting the materials from their source to the project site.

(b) Duty-free clearance. The Contractor shall not be responsible for customs duties for which the Government has been able to obtain a customs waiver. The Contractor shall follow the instructions of the Contracting Officer as to the manner of labeling the shipping containers or otherwise processing shipments of imported materials in order to obtain, or continue to receive, duty free clearance through customs. The Contractor shall be responsible for the payment of customs duties, if any, which

(1) are imposed on items which are not labeled and processed in accordance with the Contracting Officer's instructions,

(2) are imposed on the Contractor's tools, construction equipment and machinery imported for use on the project, or

(3) are otherwise ineligible for duty-free entry. The Contractor is responsible for customs duties where the Contractor has failed to give adequate and timely notice to the Contracting Officer of importation on containers or materials which may be eligible for a customs waiver. The Contracting Officer will provide instructions concerning time periods for notification of importation by the Contractor.

(c) Customs Clearance. The Government will be responsible for obtaining customs clearances, and for obtaining exemption certificates or paying customs duties not waived, for imported products, materials and equipment which are labeled and processed in accordance with the Contracting Officer's instructions. The Government shall not be responsible for obtaining customs clearance for the Contractor's tools, construction equipment or machinery, nor for obtaining visas, entry or work permits for the Contractor's personnel.

F.11.2 SURPLUS MATERIALS

Unless otherwise specified, any surplus materials, fixtures, articles or equipment remaining at the completion of the project shall become the property of the Contractor, except those items furnished by the Government, whose cost is not included in the contract price.

F.12 SPECIAL WARRANTIES

F.12.1 SPECIAL WARRANTY OBLIGATIONS

Any special warranties that may be required under the contract shall be subject to the stipulations set forth in 52.246-21, "Warranty of Construction", as long as they do not conflict with the special warranty.

F.12.2 WARRANTY INFORMATION

The Contractor shall obtain and furnish to the Government all information required in order to make any subcontractor's, manufacturers, or supplier's guarantee or warranty legally binding and effective. The Contractor shall submit both the information and the guarantee or warranty to the Government in sufficient time to permit the Government to meet any time limit specified in the guarantee or warranty, but not later than completion and acceptance of all work under this contract.

F.13 EQUITABLE ADJUSTMENTS

F.13.1 BASIS FOR EQUITABLE ADJUSTMENTS

Any circumstance for which the contract provides an equitable adjustment that causes a change within the meaning of paragraph (a) of the "Changes" clause shall be treated as a change under that clause. The Contractor shall give the Contracting Officer written notice (within 20 days) stating:

(a) the date, circumstances, and applicable contract clause authorizing an equitable adjustment and

(b) that the Contractor regards the event as a changed condition for which an equitable adjustment is allowed under the contract.

F.13.2 DIFFERING SITE CONDITION NOTICE

The Contractor shall provide written notice of a differing site condition within 10 days of occurrence following FAR 52.236-2, Differing Site Conditions.

F.13.3 DOCUMENTATION OF PROPOSALS FOR EQUITABLE ADJUSTMENTS

(a) ITEMIZATION OF PROPOSALS AND REQUESTS. The Contractor shall submit any request for equitable adjustment in the contract price, including any change proposal submitted in accordance with the "Changes" clause, in the form of a lump sum proposal supported with an itemized breakdown of all increases and decreases in the contract price in the detail required by the Contracting Officer, The request shall include all costs and delays related to or arising out of the change or event giving rise to the proposed adjustment, including any delay damages and additional overhead costs.

(b) PROPOSED TIME ADJUSTMENTS. The Contractor shall submit a proposed time extension (if applicable) with any request for an equitable adjustment or change proposal. The request shall include sufficient information to demonstrate whether and to what extent the change will delay the completion of the contract.

(c) RELEASE BY CONTRACTOR. The price and time adjustment made in any contract modification issued as a result of a change proposal or request for an equitable adjustment shall be considered to account for all items affected by the change or other circumstances giving rise to an equitable adjustment. Upon issuance of such contract modification, the Government shall be released from any and all liability under this contract for further equitable adjustments attributable to the facts and circumstances giving rise to the change proposal or request for equitable adjustment.

F.14 NONCOMPLIANCE WITH CONTRACT REQUIREMENTS

If the Contractor, after receiving written notice from the Contracting Officer of noncompliance with any requirement of this contract, fails to initiate promptly appropriate action(s) to bring performance/work into compliance with a contract requirement within a reasonable period of time, the Contracting Officer shall have the right to order the Contractor to suspend any or all work under the contract. This order shall be in force until the Contractor has complied or has initiated such action as may be appropriate to comply within a reasonable period of time. The Contractor will not be entitled to any extension of contract time or payment for any costs incurred as a result of being ordered to suspend work for such a cause.

F.15 ZONING APPROVALS AND BUILDING PERMITS

The Government is responsible for:

- obtaining proper zoning or other land use control approval for the project,
- obtaining the approval of the Contract Drawings and Specifications,
- paying fees due, and
-
- obtaining and paying for the initial building permits.

- **End of SOW -**