1 - LANDSCAPE
2 - GRAVEL FOR WATER FILTRATION
3 - CONCRETE CURB
4 - NEW PARKING ~~AREA~~
5 - NEW SIDEWALK
6 - EXISTING PARKING AREA
7 - EXISTING SIDE WALK
8 - PROTECTIVE BOLLARDS
9 - NEW FENCE

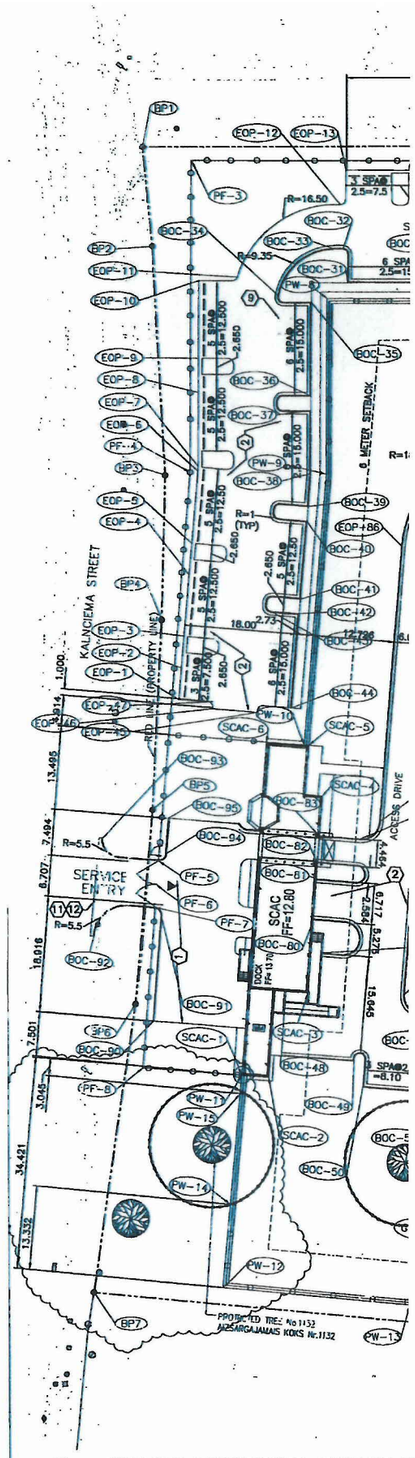

1 SITE AND DIMENSIONAL CONTROL PLAN

C-102 | C-102

1:400

Remarks
1. Coordinate system LKS-92 TM.
2. Baltic elevation system.
3. Survey data - November 2007.
4. Utilities partially inspected on site and coordinated, with utility providers.
5. Cadastrial information matching cadastrial map maintained by state land service.
6. Red lines of the streets placed on survey accordingly, information received by „Rigas Geometra".
7. Basepoints used for survey:
Polp.p. Nr.2441 x=309357.790, y=501901.769, h=11.509
Gps. Nr.2000 x=309712.500, y=501784.140.140, h=12.120
Gps. Nr. 2001 x=309677.861, y=501690.006, h=12.132

NOTES:

1. FOR ADDITIONAL SITE PAVEMENT COORDINATES AT ROADS AND PARKING EDGE, REF: M\C1.11
2. FOR PERIMETER WALL AND PICKET FENCE TYPE AND REFERENCE TO DETAIL, REF: S2.05

KEY NOTES:

1. CONCRETE PAVEMENT, FOR PAVING JOINTS AND DETAILS REF.: C1.11
2. ASPHALT PAVING, FOR DETAILS REF.: C1.11
3. CONCRETE PAVING HEADER AT CONCRETE TO ASPHALT PAVEMENT CHANGE, REF: E\C1.11
4. FOR ACCESSIBLE PARKING DIMENSIONS, STRIPING AND DETAILS, REF: DETAILS B AND C\C5.04
5. FOR BASKETBALL COURT, DIMENSIONS AND DETAILS, REF: LANDSCAPE
6. MOTORCYCLE PARKING SPACES
7. BICYCLE RACKS
8. FOR SIDEWALK PAVING DETAILS, REF: E\C5.04
9. IN PARKING LOTS, STRIPING SHALL BE 100 WIDE, WHITE CONTINUOUS
10. PAVERS HEADER AT ASPHALT PAVEMENT, FOR DETAILS REF: L\C1.11
11. SAW CUT EXISTING PAVEMENT PRIOR TO CONSTRUCTING PAVERS HEADER IN ENTRANCE DRIVE
12. CONCRETE PAVEMENT HEADER AT SERVICE ENTRY, REF: E\C1.11

LEGEND

- BOC — BACK OF CURB OR EDGE OF CURBLESS PAVEMENT
- BP1 — BOUNDARY POINTS COORDINATES
- PW1 — PERIMETER WALL COORDINATES AT OUTSIDE OF CONCRETE FACE
- PF — PERIMETER FENCE–REF: FENCE DETAILS FOR HORIZONTAL WORK POINT
- NOB — NEW OFFICE BUILDING, COORDINATES AT CENTERLINE OF COLUMN
- MCAC — MAIN COMPOUND ACCESS CONTROL, COORDINATES AT OUTSIDE CORNER OF BLDG WALL
- SCAC — SERVICE COMPOUND ACCESS CONTROL, COORDINATES AT OUTSIDE CORNER OF BLDG WALL
- GSO — GENERAL SERVICES OFFICE
- 66 — KEY NOTES
- 52 — SANITARY OR STORM STRUCTURE NUMBERS
- INLET
- PROPERTY LINE
- LIMITS OF CONSTRUCTION
- TREE SAVE AREA, TREE PROTECTION FENCE

COORDINATE TABLE (PROJECT COORDINATES)

NO.	EASTING	NORTHING	DESCRIPTION
PW-1	E 501,722.3284	N 309,534.6638	OUTSIDE FACE OF PERIMETER WALL
PW-2	E 501866.0816	N 309643.0736	OUTSIDE FACE OF PERIMETER WALL
PW-3	E 501,848.5192	N 309,665.3708	OUTSIDE FACE OF PERIMETER WALL
PW-4	E 501,841.0904	N 309,679.5655	OUTSIDE FACE OF PERIMETER WALL
PW-5	E 501,803.7012	N 309,726.7772	OUTSIDE FACE OF PERIMETER WALL
PW-6	E 501,799.4528	N 309,723.3428	OUTSIDE FACE OF PERIMETER WALL
PW-7	E 501,784.8229	N 309,742.3974	OUTSIDE FACE OF PERIMETER WALL
PW-8	E 501,757.640	N 309,776.907	OUTSIDE FACE OF PERIMETER WALL
PW-9	E 501,735.121	N 309,759.170	OUTSIDE FACE OF PERIMETER WALL
PW-10	E 501,698.2936	N 309,734.7379	OUTSIDE FACE OF PERIMETER WALL
PW-11	E 501,649.7976	N 309,709.5325	OUTSIDE FACE OF PERIMETER WALL
PW-12	E 501,620.9272	N 309,690.7805	OUTSIDE FACE OF PERIMETER WALL
PW-13	E 501,537.7859	N 309,684.8748	OUTSIDE FACE OF PERIMETER WALL
PW-14	E 501,632.1078	N 309,698.0425	OUTSIDE FACE OF PERIMETER WALL
PW-15	E 501,647.2397	N 309,707.8711	OUTSIDE FACE OF PERIMETER WALL

COORDINATE TABLE (PROJECT COORDINATES)

NO.	EASTING	NORTHING	DESCRIPTION
PF-1	E 501,797.339	N 309,751.110	CENTER OF FENCE
PF-2	E 501,802.928	N 309,755.531	CENTER OF FENCE
PF-3	E 501,761.569	N 309,808.203	CENTER OF FENCE
PF-4	E 501,721.636	N 309,776.750	CENTER OF FENCE
PF-5	E 501,668.967	N 309,741.615	CENTER OF FENCE
PF-6	E 501,665.837	N 309,739.478	CENTER OF FENCE
PF-7	E 501,662.684	N 309,737.338	CENTER OF FENCE
PF-8	E 501,640.892	N 309,722.764	CENTER OF FENCE
CCAC-1	E 501,847.843	N 309,684.867	OUTSIDE CORNER BLDG WALL
CCAC-2	E 501,853.489	N 309,669.337	OUTSIDE CORNER BLDG WALL
CCAC-3	E 501,843.747	N 309,681.638	OUTSIDE CORNER BLDG WALL
CCAC-4	E 501,840.537	N 309,679.096	OUTSIDE CORNER BLDG WALL

COORDINATE TABLE (PROJECT COORDINATES)

NO.	EASTING	NORTHING	DESCRIPTION
GSO-1	E 501,670.4941	N 309,643.1505	CENTER OF COLUMN E-1
GSO-2	E 501,689.9461	N 309,656.1575	CENTER OF COLUMN E-4
GSO-3	E 501,673.8821	N 309,680.1816	CENTER OF COLUMN A-4
GSO-4	E 501,654.4301	N 309,667.1747	CENTER OF COLUMN A-1
MCAC-1	E 501,794.4007	N 309,719.4761	OUTSIDE CORNER, BLDG WALL
MCAC-2	E 501,799.8423	N 309,723.7852	OUTSIDE CORNER, BLDG WALL
MCAC-3	E 501,785.0451	N 309,742.4713	OUTSIDE CORNER, BLDG WALL
MCAC-4	E 501,779.1554	N 309,734.1534	OUTSIDE CORNER, BLDG WALL
MSGO-1	E 501,726.4243	N 309,586.2166	CENTER OF COLUMN E-6
MSGO-2	E 501,742.3055	N 309,588.6106	CENTER OF COLUMN A-8
MSGO-3	E 501,722.8705	N 309,617.8388	CENTER OF COLUMN A-1
MSGO-4	E 501,715.3500	N 309,602.8710	CENTER OF COLUMN E-4

SBU

COORDINATE TABLE (PROJECT COORDINATES)

NO.	EASTING	NORTHING	DESCRIPTION
NOB-1	E 501,768.6940	N 309,614.4013	CENTER OF COLUMN A-1
NOB-2	E 501,811.0243	N 309,647.9296	CENTER OF COLUMN G-1
NOB-3	E 501,777.4961	N 309,690.2599	CENTER OF COLUMN G-7
NOB-4	E 501,735.1658	N 309,656.7317	CENTER OF COLUMN A-7
SCAC-1	E 501,649.8285	N 309,709.5232	OUTSIDE CORNER, BLDG WALL
SCAC-2	E 501,652.2470	N 309,705.9376	OUTSIDE CORNER, BLDG WALL
SCAC-3	E 501,657.0483	N 309,709.3410	OUTSIDE CORNER, BLDG WALL
SCAC-4	E 501,693.7020	N 309,727.3189	OUTSIDE CORNER, BLDG WALL
SCAC-5	E 501,698.6884	N 309,734.1080	OUTSIDE CORNER, BLDG WALL
SCAC-6	E 501,694.8076	N 309,739.8619	OUTSIDE CORNER, BLDG WALL
UTL-1	E 501,694.7209	N 309,667.4085	CENTER OF COLUMN H-1
UTL-2	E 501,715.6838	N 309,681.4282	CENTER OF COLUMN H-4
UTL-3	E 501,697.5693	N 309,708.5140	CENTER OF COLUMN A-4
UTL-4	E 501,686.5969	N 309,701.1758	CENTER OF COLUMN A-2

COORDINATE TABLE (PROJECT COORDINATES)

NO.	EASTING	NORTHING	DESCRIPTION
UTL-5	E 501,676.6064	N 309,694.4944	CENTER OF COLUMN A-1
UTL-6	E 501,696.1053	N 309,686.9584	CENTER OF COLUMN C-2

BOUNDARY POINTS COORDINATES

NO.	EASTING	NORTHING
BP1	E 501,758.449	N 309,815.690
BP2	E 501,746.802	N 309,804.454
BP3	E 501,718.776	N 309,779.622
BP4	E 501,699.894	N 309,765.448
BP5	E 501,674.896	N 309,747.533
BP6	E 501,648.314	N 309,730.126
BP7	E 501,607.356	N 309,706.626
BP8	E 501,636.240	N 309,662.156
BP9	E 501,664.362	N 309,618.860
BP10	E 501,694.809	N 309,571.983
BP11	E 501,721.629	N 309,530.692
BP12	E 501,758.400	N 309,558.422
BP13	E 501,812.728	N 309,599.394
BP14	E 501,861.220	N 309,635.963
BP15	E 501,886.169	N 309,654.778

SITE NORTH

TRUE NORTH

0 5 10 25m

SCALE = 1:400

C1.02

2 3 4 5 6 7 8 9 10 11 12 13 14 15 16 17

SBU

CONCRETE PAVEMENT NOTES

FOR PAVEMENT JOINT SPACING, CONTRACTOR SHALL PROVIDE A LAYOUT FOR REVIEW PER SPECIFICATIONS.
JOINTS WILL BE SPACED A MAXIMUM OF 4.5m. JOINTS TERMINATING AT CURBS WILL BE PERPENDICULAR TO CURB AND BE NO LESS THAN 300mm IN LENGTH. BOARD EXPANSION JOINTS WILL BE PLACED AT 13.5m INTERVALS. LONGITUDINAL JOINTS ARE NOT TO BE PLACED ALONG STORMWATER RUNOFF FLOWLINES.

COORDINATE TABLE (PROJECT COORDINATES)			
NO.	EASTING	NORTHING	DESCRIPTION
EOP-1	501691.4830	309755.2696	EDGE OF PAVEMENT
EOP-2	501695.8574	309757.9917	EDGE OF PAVEMENT
EOP-3	501700.0659	309760.9638	EDGE OF PAVEMENT
EOP-4	501708.3989	309766.4921	EDGE OF PAVEMENT
EOP-5	501712.6903	309769.3392	EDGE OF PAVEMENT
EOP-6	501722.5391	309775.8732	EDGE OF PAVEMENT
EOP-7	501723.1885	309776.3431	EDGE OF PAVEMENT
EOP-8	501732.6697	309783.8110	EDGE OF PAVEMENT
EOP-9	501737.0681	309787.2739	EDGE OF PAVEMENT
EOP-10	501747.0037	309795.1012	EDGE OF PAVEMENT
EOP-11	501755.3170	309790.6041	EDGE OF PAVEMENT
EOP-12	501771.0112	309784.7791	EDGE OF PAVEMENT
EOP-13	501775.8578	309787.5145	EDGE OF PAVEMENT
EOP-14	501782.3239	309779.3052	EDGE OF PAVEMENT
EOP-15	501791.7909	309767.2859	EDGE OF PAVEMENT
EOP-16	501801.0724	309755.5022	EDGE OF PAVEMENT
BOC-17	501829.9123	309733.0881	BACK OF CURB
BOC-18	501819.4851	309746.2914	BACK OF CURB
BOC-19	501814.9786	309740.3907	BACK OF CURB
BOC-20	501823.7130	309733.8021	BACK OF CURB
EOP-21	501826.8457	309723.3866	EDGE OF PAVEMENT
EOP-22	501846.6880	309698.2175	EDGE OF PAVEMENT
BOC-23	501838.0385	309688.4899	BACK OF CURB
BOC-24	501810.4460	309723.5214	BACK OF CURB
BOC-25	501788.1897	309738.6291	BACK OF CURB
BOC-26	501786.6963	309744.1789	BACK OF CURB
BOC-27	501776.6127	309764.4959	BACK OF CURB
BOC-28	501781.1120	309751.2687	BACK OF CURB
BOC-29	501772.9598	309761.6187	BACK OF CURB
BOC-30	501771.5057	309763.4548	BACK OF CURB
BOC-31	501761.7602	309775.8376	BACK OF CURB
BOC-32	501755.5549	309779.9089	BACK OF CURB
BOC-33	501764.7729	309780.9014	BACK OF CURB
BOC-34	501753.0394	309783.3722	BACK OF CURB
BOC-35	501755.5451	309778.5726	BACK OF CURB
BOC-36	501743.5448	309769.0819	BACK OF CURB
BOC-37	501741.6987	309767.6278	BACK OF CURB
BOC-38	501733.6112	309761.2577	BACK OF CURB
BOC-39	501729.0568	309758.2362	BACK OF CURB
BOC-40	501727.0986	309756.9370	BACK OF CURB
BOC-41	501716.4325	309749.8608	BACK OF CURB
BOC-42	501714.4742	309748.5616	BACK OF CURB
BOC-43	501711.9043	309752.4352	BACK OF CURB
BOC-44	501701.7249	309740.1033	BACK OF CURB
EOP-45	501697.7260	309744.0505	BACK OF CURB
EOP-46	501693.6903	309750.1337	BACK OF CURB
EOP-47	501694.1356	309751.2698	BACK OF CURB
BOC-48	501656.2723	309706.4273	BACK OF CURB
BOC-49	501662.9803	309696.5210	BACK OF CURB
BOC-50	501660.5584	309692.6844	BACK OF CURB
BOC-51	501665.2280	309685.7020	BACK OF CURB
BOC-52	501664.6365	309682.0693	BACK OF CURB
BOC-53	501667.5827	309677.6836	BACK OF CURB
BOC-54	501675.2614	309680.5927	BACK OF CURB
BOC-55	501712.0362	309625.6012	BACK OF CURB
BOC-56	501716.1697	309621.5787	BACK OF CURB
BOC-57	501725.4160	309627.7201	BACK OF CURB
BOC-58	501723.0689	309632.7638	BACK OF CURB
BOC-59	501728.0065	309636.0434	BACK OF CURB
BOC-60	501731.7645	309632.0088	BACK OF CURB
BOC-61	501735.0523	309634.2109	BACK OF CURB
BOC-62	501737.1607	309636.9111	BACK OF CURB
BOC-63	501745.7994	309642.6747	BACK OF CURB
BOC-64	501738.5599	309651.8367	BACK OF CURB
BOC-65	501725.5865	309643.2038	BACK OF CURB
BOC-66	501721.6934	309647.2294	BACK OF CURB
BOC-67	501717.0708	309644.1579	BACK OF CURB
BOC-68	501719.4472	309640.3354	BACK OF CURB
BOC-69	501716.6170	309637.2575	BACK OF CURB
BOC-70	501716.3895	309641.8476	BACK OF CURB
BOC-71	501699.0319	309667.8035	BACK OF CURB
BOC-72	501695.4159	309665.3854	BACK OF CURB
BOC-73	501694.0287	309665.6608	BACK OF CURB
BOC-74	501675.9427	309692.7059	BACK OF CURB
BOC-75	501676.7307	309696.6614	BACK OF CURB
BOC-76	501737.0518	309736.8889	BACK OF CURB
BOC-77	501753.7287	309734.2598	BACK OF CURB
BOC-78	501795.7661	309681.1788	BACK OF CURB
BOC-79	501673.5917	309711.5921	BACK OF CURB
BOC-80	501676.9567	309715.9939	BACK OF CURB
BOC-81	501682.5254	309719.7500	BACK OF CURB
BOC-82	501684.6672	309721.1947	BACK OF CURB
BOC-83	501688.3623	309723.6871	BACK OF CURB
BOC-84	501692.1002	309718.0858	BACK OF CURB
BOC-85	501696.2599	309717.2551	BACK OF CURB
BOC-86	501733.5668	309742.1305	BACK OF CURB
BOC-87	501758.6675	309738.1711	BACK OF CURB
BOC-88	501767.9982	309726.3892	BACK OF CURB
BOC-89	501772.0018	309725.9243	BACK OF CURB
BOC-90	501647.9162	309726.2145	BACK OF CURB
BOC-91	501662.2474	309735.8355	BACK OF CURB
BOC-92	501652.7516	309742.2419	BACK OF CURB
BOC-93	501666.2546	309751.0426	BACK OF CURB
BOC-94	501670.5475	309741.4070	BACK OF CURB
BOC-95	501675.4119	309744.6495	BACK OF CURB
BOC-96	501826.5980	309675.0455	BACK OF CURB
BOC-97	501819.5446	309684.3008	BACK OF CURB
BOC-98	501803.2910	309702.5881	BACK OF CURB
BOC-99	501797.0132	309708.0241	BACK OF CURB
BOC-100	501790.2663	309709.8531	BACK OF CURB
BOC-101	501779.3313	309723.6609	BACK OF CURB
BOC-102	501812.1643	309682.2024	BACK OF CURB
BOC-103	501799.4698	309685.6682	BACK OF CURB

M C1.1 C1.02 PAVEMENT COORDINATES
NOT TO SCALE

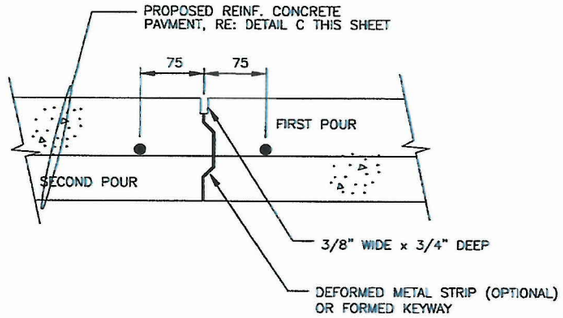

A C-113 C1.02 CONSTRUCTION JOINT DETAIL
NOT TO SCALE

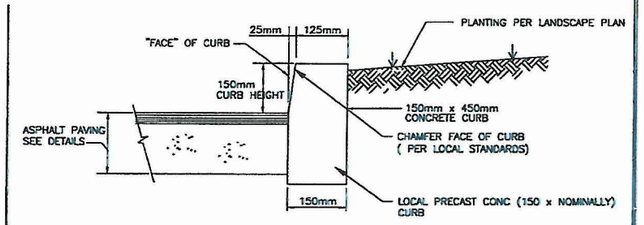

NOTES:
1. PROVIDE EXP. JOINTS AT 7.5m O.C. AND @ THE START AND FINISH OF ALL CURVED SECTIONS.
2. PAINT CURBS, WHERE NOTED, PER LANDSCAPE PLANS.

B C1.1 C1.02 CONCRETE CURB DETAIL
NOT TO SCALE

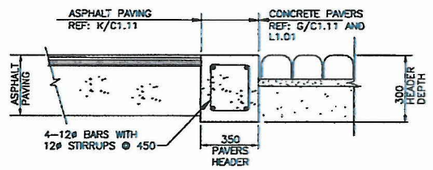

L C1.1 C1.02 PAVERS HEADER AT ASPHALT PAVING
NOT TO SCALE

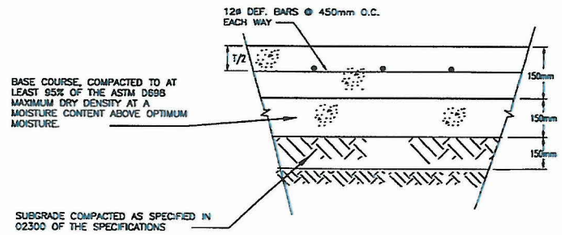

C C1.1 C1.02 CONCRETE PAVING-HEAVY DUTY SECTION
NOT TO SCALE

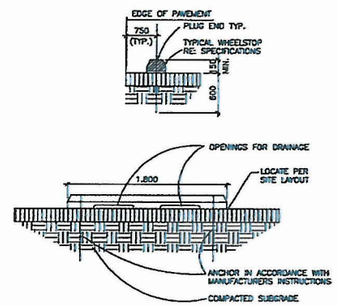

D C1.1 C1.02 CONCRETE WHEEL STOP
NOT TO SCALE

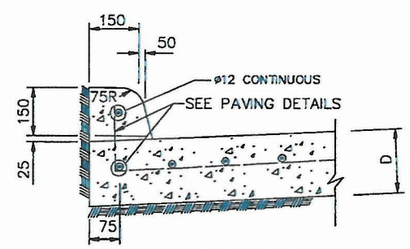

CONCRETE CURB

J C-104 C-112 CONCRETE CURB
NOT TO SCALE

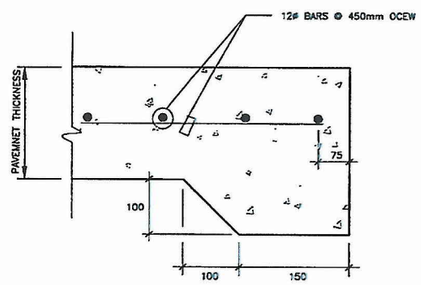

E C-104 C-112 STANDARD PAVING HEADER
NOT TO SCALE

NOTE:
THIS DETAIL USED AT END OF CONCRETE PAVING OR TRANSITION TO ASPHALT

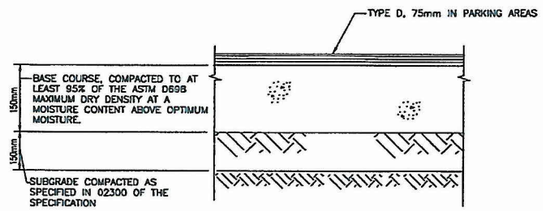

F C1.1 C1.02 ASPHALT PAVING SECTION
NOT TO SCALE

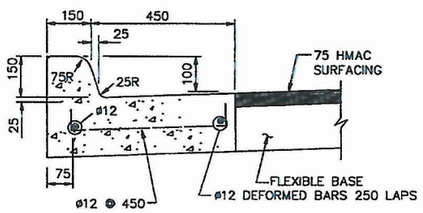

H C1.1 C1.02 MONOLITHIC CURB AND GUTTER
NOT TO SCALE

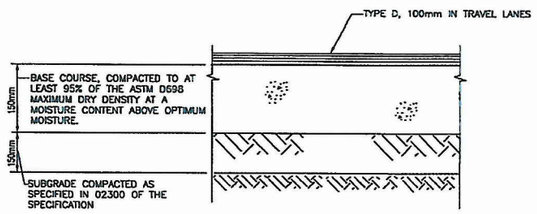

K C1.1 C1.02 ASPHALT PAVING SECTION
NOT TO SCALE

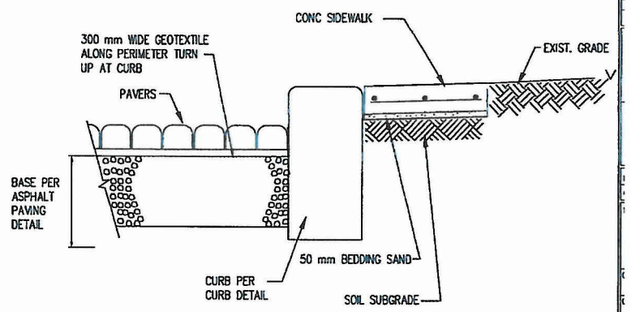

G C1.1 C1.02 CURB AND PAVING PAVERS
NOT TO SCALE

SBU

C.1.11.

SBU

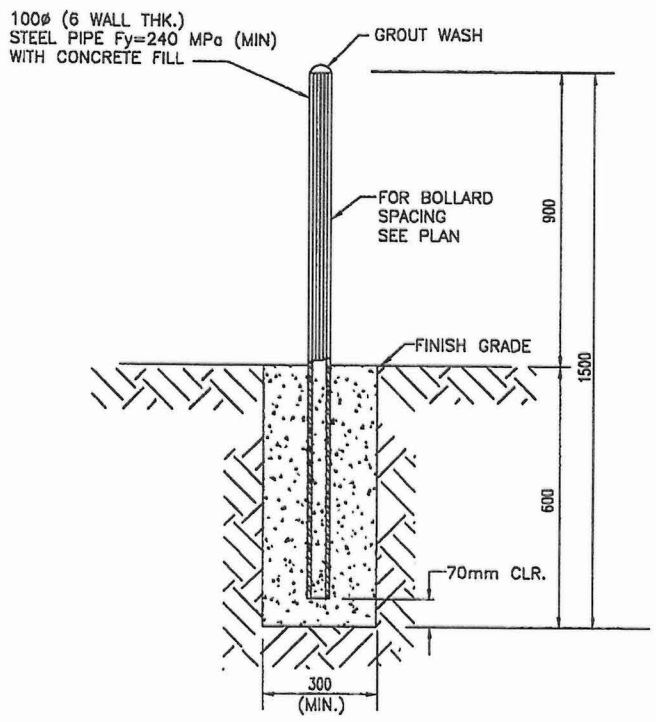

F C-504 C-102 TRAFFIC BOLLARD
NOT TO SCALE

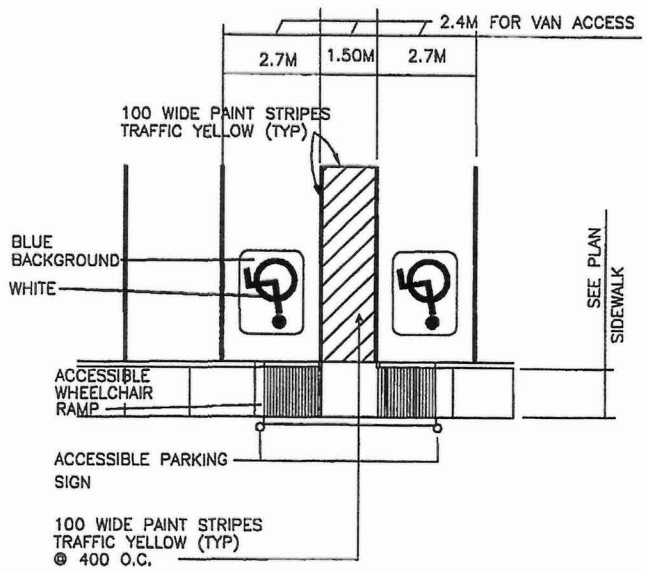

C C-504 C-102 ACCESSIBLE PARKING STRIPING PLAN
NOT TO SCALE

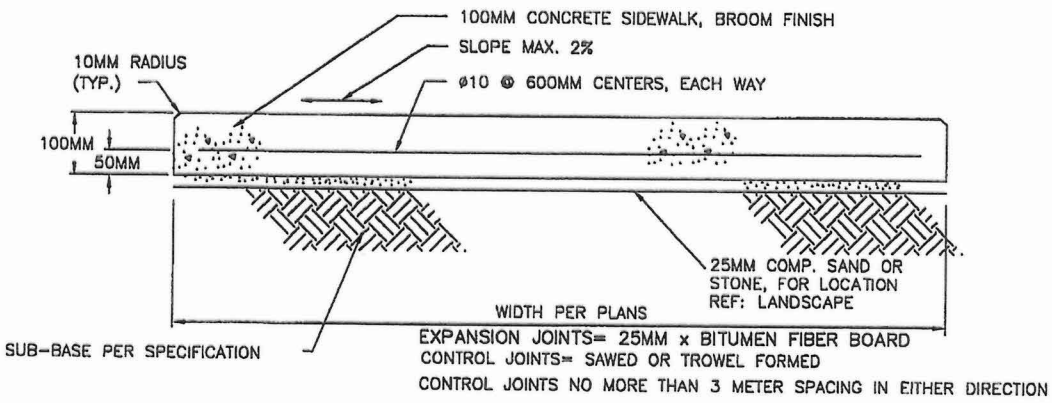

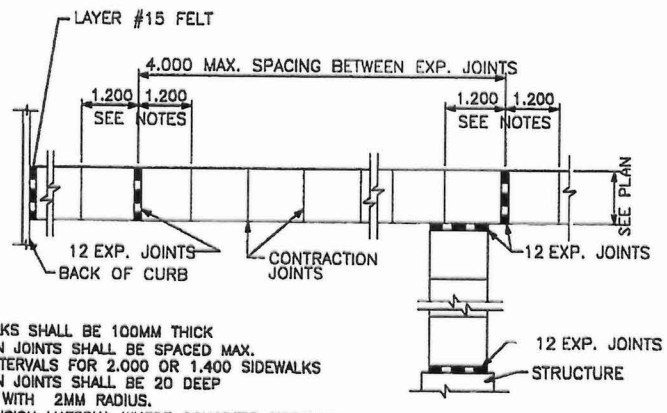

NOTES:
1. ALL SIDEWALKS SHALL BE 100MM THICK
2. CONTRACTION JOINTS SHALL BE SPACED MAX. AT 1.200 INTERVALS FOR 2.000 OR 1.400 SIDEWALKS
3. CONTRACTION JOINTS SHALL BE 20 DEEP AND EDGED WITH 2MM RADIUS.
4. 12MM EXPANSION MATERIAL WHERE CONCRETE SIDEWALK ABUTS CONCRETE STRUCTURE.
5. A LAYER OF #15 FELT IS REQUIRED BETWEEN WALK AND ADJACENT PARALLELING CONCRETE CURB.

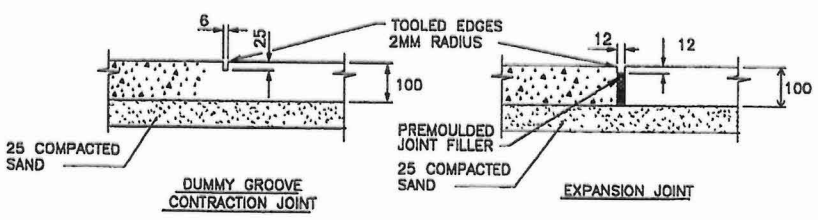

E C-504 C-102 CONCRETE SIDEWALK SECTION
NOT TO SCALE

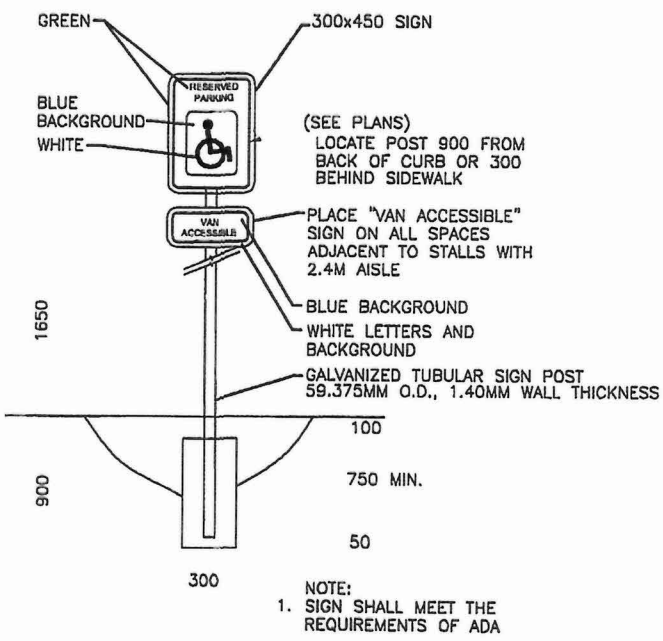

NOTE:
1. SIGN SHALL MEET THE REQUIREMENTS OF ADA

B C-504 C-102 ACCESSIBLE PARKING SIGN
NOT TO SCALE

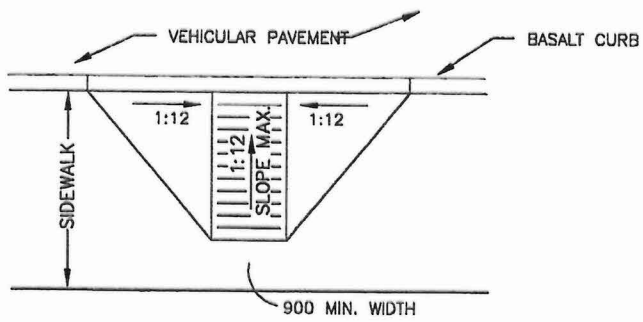

THE FINISHED SURFACE OF A WHEEL CHAIR RAMP IS TO BE GROOVED LATERALLY WITH 5MM WIDE BY 5MM DEEP GROOVES, SPACED 55MM C-C, & ROUGHENED NO LESS THAN A BROOM FINISH TO PREVENT SLIPPING, & TO DIFFERENTIATE TEXTURE FROM THAT OF A STANDARD SIDEWALK.

RAMP TO BE PIGMENTED OR PAINTED IN CONTRASTING COLOR

D C-504 C-102 WHEELCHAIR RAMP PLAN
NOT TO SCALE

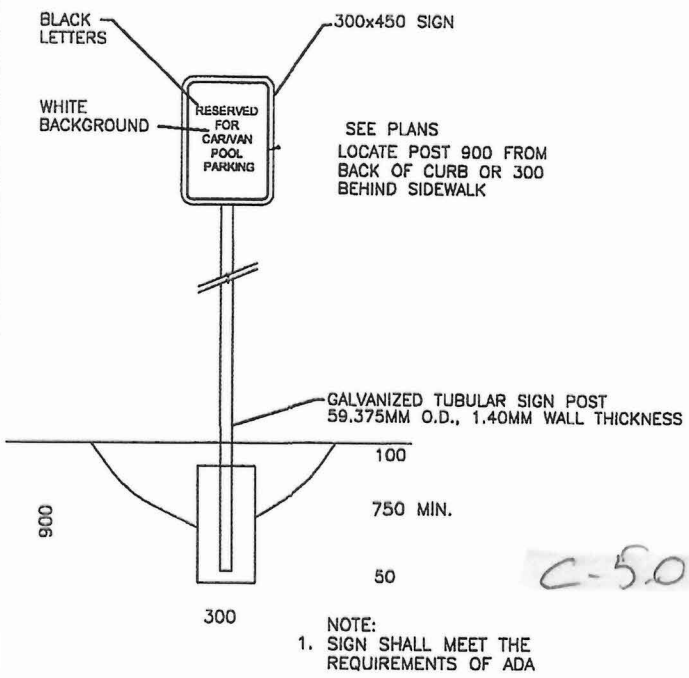

C-504

NOTE:
1. SIGN SHALL MEET THE REQUIREMENTS OF ADA

A C-504 C-102 CAR/VAN POOL PARKING SIGN
NOT TO SCALE

SBU

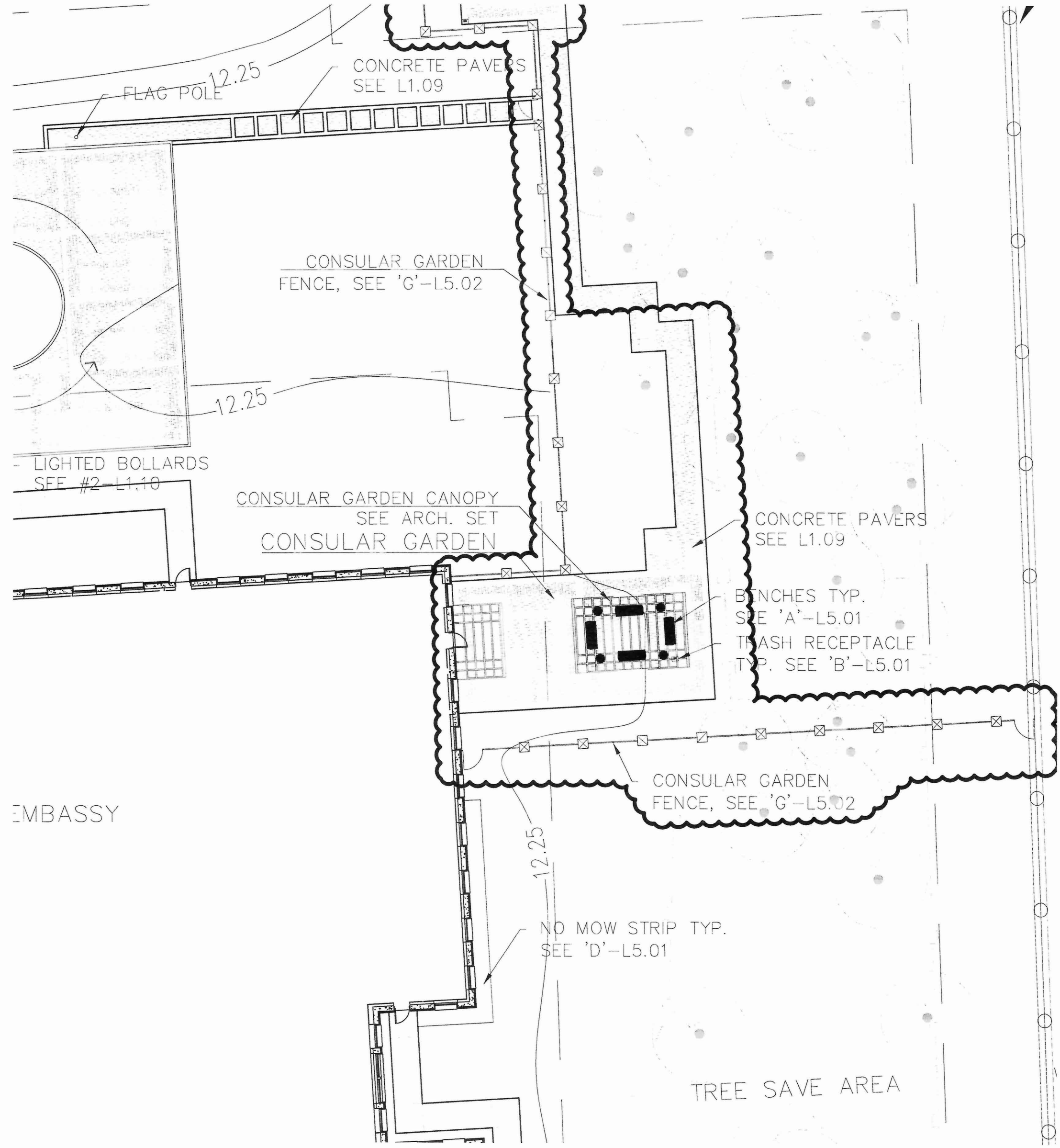
12.25
FLAG POLE
CONCRETE PAVERS
SEE L1.09
CONSULAR GARDEN
FENCE, SEE 'G'-L5.02
12.25
LIGHTED BOLLARDS
SEE #2-L1.10
CONSULAR GARDEN CANOPY
SEE ARCH. SET
CONSULAR GARDEN
CONCRETE PAVERS
SEE L1.09
BENCHES TYP.
SEE 'A'-L5.01
TRASH RECEPTACLE
TYP. SEE 'B'-L5.01
CONSULAR GARDEN
FENCE, SEE 'G'-L5.02
EMBASSY
12.25
NO MOW STRIP TYP.
SEE 'D'-L5.01
TREE SAVE AREA

L.1.01

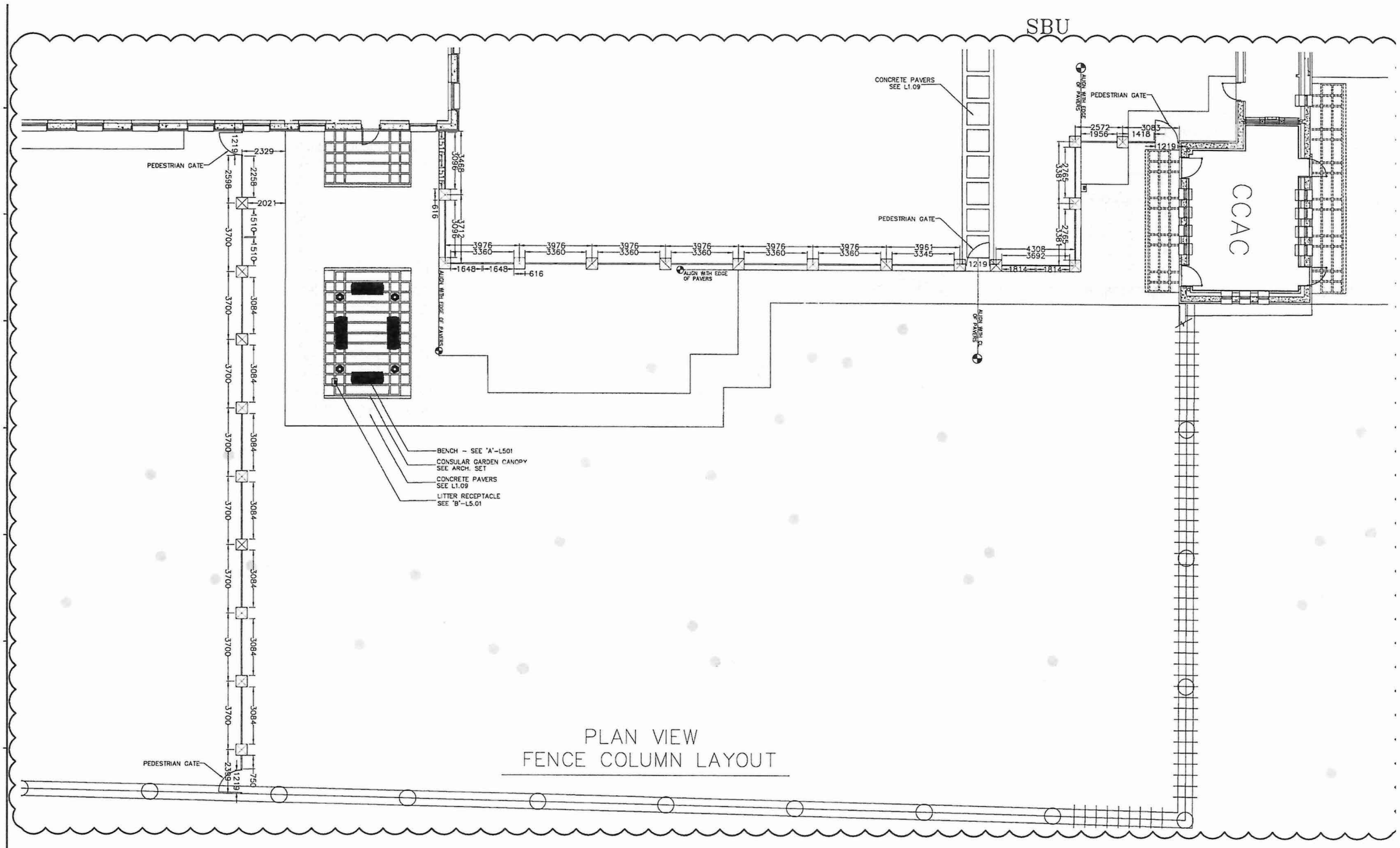

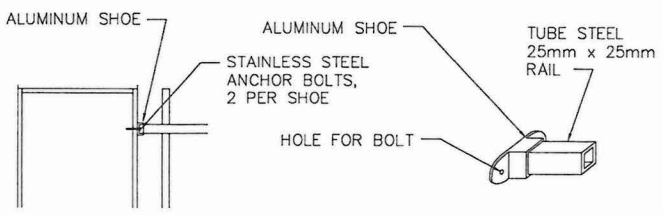

FENCE & COLUMN CONNECTION TYP.

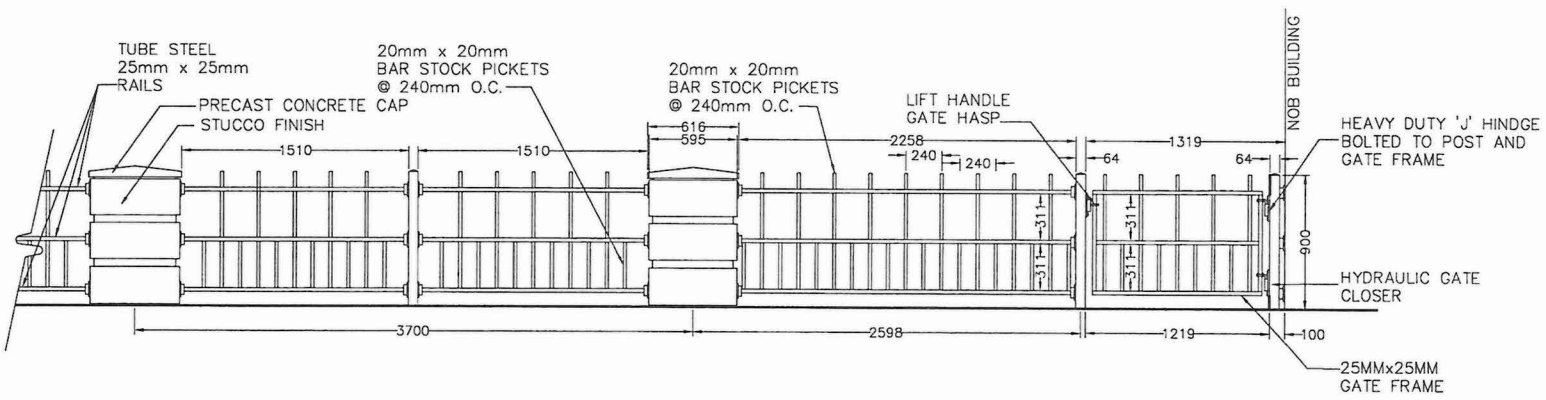

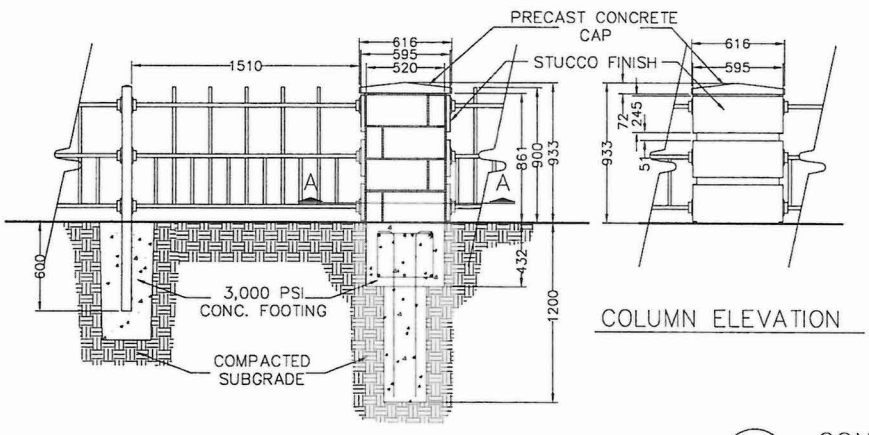

COLUMN ELEVATION

COLUMN SECTION

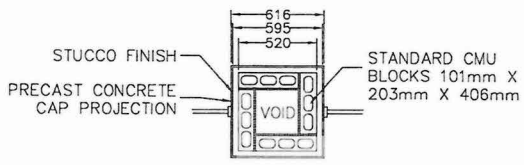

COLUMN PLAN VIEW – SECTION 'A–A'

G CONSULAR GARDEN FENCE
NTS

SBU

L.502

DATED APRIL 22, 2008.

C. FOUNDATIONS

1. FOUNDATION SYSTEMS ARE DESIGNED IN ACCORDANCE WITH RECOMMENDATIONS OF THE GEOTECHNICAL ENGINEERING REPORT PREPARED BY SCHNABEL ENGINEERING, LLC DATED APRIL 22, 2008.

2.

b) PILE DIAMETER, D:

e) GROUP EFFICIENCY FOR VERTICAL LOADING:

f) LATERAL DESIGN CAPACI

g) GROUP EFFICIENCY FOR LATERAL LOADING:

3.

4. SHALLOW FOUNDATIONS ALLOWABLE SOIL BEARING PRESSURE TO BE IN ACCORDANCE WITH THE GEOTECHNICAL ENGINEERING REPORT AS FOLLOWS:

100 kPa

N/A

5. SPREAD FOOTINGS SHALL BE FOUNDED ON STRUCTURAL FILL, OR TYPE SM OR MORE GRANULAR NATURAL SOILS OF STRATUM A WITH MINIMUM ALLOWABLE BEARING CAPACITY AS DESCRIBED ABOVE, IN ACCORDANCE WITH THE GEOTECHNICAL REPORT. THIS BEARING CAPACITY SHALL BE VERIFIED BY A QUALIFIED GEOTECHNICAL ENGINEER HIRED BY CONTRACTOR PRIOR TO PLACING ANY FOUNDATION.

6. THE BOTTOM OF EXTERIOR FOOTINGS SHOULD BE PLACED AT LEAST 1.2M BELOW FINAL EXTERIOR GRADE FOR FROST PROTECTION.

7. FOOTING ELEVATIONS INDICATED ON PLAN REPRESENT THE MINIMUM FOOTING DEPTH, AND AN APPROXIMATE ELEVATION FOR SOIL WITH ADEQUATE BEARING CAPACITY. FOOTINGS MAY HAVE TO BE LOWERED TO REACH SUITABLE BEARING SOILS AS REQUIRED DURING CONSTRUCTION. ALTERNATIVELY, THE FOOTING SUBGRADE MAY BE UNDERCUT TO REACH SUITABLE BEARING MATERIAL AND BACKFILLED AS DESCRIBED IN NOTE C.8.

8. WHERE THE SUBGRADE IS UNDERCUT TO REACH SUITABLE BEARING MATERIAL, ALL BACKFILL SHALL BE STRUCTURAL FILL, CRUSHED STONE (ASTM C-33 No 57), OR LEAN CONCRETE, IN ACCORDANCE WITH THE GEOTECHNICAL REPORT AND THE EARTHWORK SPECIFICATION.

9. STRUCTURAL FILL SHALL CONSIST OF SOIL CLASSIFYING AS SC, SM, SP, SW, GC, GM, GP, OR GW PER ASTM D-2487. THE FINE-GRAINED PORTION OF STRUCTURAL FILL AND BACKFILL SOILS SHALL HAVE A LIQUID LIMIT LESS THAN 45 AND A PLASTICITY INDEX LESS THAN 20.

10. STRUCTURAL FILL AND BACKFILL SHALL BE COMPACTED IN LIFTS NOT EXCEEDING 200 IN LOOSE THICKNESS TO AT LEAST 95 PERCENT OF THE MAXIMUM DRY DENSITY PER THE STANDARD PROCTOR (ASTM D-698).

11. FOOTING SUBGRADES SHALL BE PREPARED IN ACCORDANCE WITH GEOTECHNICAL REPORT AND EARTHWORK SPECIFICATION.

12. ALL ORGANIC AND/OR OTHER UNSUITABLE MATERIALS SHALL BE REMOVED FROM FOUNDATION AND SLAB SUBGRADES.

13. PROVIDE ALL NECESSARY MEASURES TO PREVENT ANY FROST OR ICE FROM PENETRATING ANY FOUNDATION OR SLAB SUBGRADE BEFORE AND AFTER PLACING OF CONCRETE AND UNTIL SUCH SUBGRADES ARE FULLY PROTECTED BY THE PERMANENT BUILDING STRUCTURES.

14. NO MUD SLABS, GRADE BEAMS, FOOTINGS, WALLS, OR SLABS SHALL BE PLACED INTO OR AGAINST SUBGRADE CONTAINING FREE WATER, FROST OR ICE. SHOULD WATER OR FROST ENTER A FOOTING EXCAVATION AFTER SUBGRADE APPROVAL, THE SUBGRADE SHALL BE RE-INSPECTED BY THE GEOTECHNICAL ENGINEER AFTER REMOVAL OF WATER OR FROST.

15. ALL SLABS-ON-GRADE SHALL BEAR ON STRUCTURAL FILL, OR TYPE SM OR MORE GRANULAR NATURAL SOILS OF STRATUM A, PROOFROLLED WITH A MIN OF TWO PASSES USING A 9,100-kg (10-TON) DUMP TRUCK OR OTHER EQUIVALENT WEIGHT RUBBER-TIRED VEHICLE, PRIOR TO PLACEMENT OF A 150MM THICK (MIN.) LAYER OF WASHED GRAVEL OR CRUSHED STONE (ASTM C-33 No 57 OR SIMILAR) AND A 10 THICK IMPERMEABLE PLASTIC VAPOR-BARRIER, IN ACCORDANCE WITH THE GEOTECHNICAL REPORT AND EARTHWORK SPECIFICATIONS.

16. PROVIDE QUALITY CONTROL AND TESTING OF MATERIALS, OF THE SUBGRADE AND FILL LAYERS BY A QUALIFIED GEOTECHNICAL ENGINEER FAMILIAR WITH THE REQUIREMENTS OF THE GEOTECHNICAL REPORT.

17. VERIFY ALL EXISTING FIELD CONDITIONS THAT MAY AFFECT THE INSTALLATION OF THE FOUNDATION SYSTEM PRIOR TO STARTING WORK. LOCATE AND PROTECT ALL UTILITIES WHICH MAY BE AFFECTED BY THE CONSTRUCTION PROCESS.

18. DO NOT PLACE UTILITY LINES THROUGH OR BELOW FOUNDATIONS WITHOUT REVIEW AND APPROVAL BY PROJECT DIRECTOR AND QUALITY CONTROL MANAGER.

19. DO NOT BACKFILL AGAINST BASEMENT WALLS UNTIL FLOOR SLABS ARE IN PLACE. BACKFILL AGAINST BOTH SIDES OF WALLS EQUALLY UNTIL THE LOWER ELEVATION IS ATTAINED.

D. CAST-IN-PLACE CONCRETE

1. NORMAL WEIGHT CONCRETE SHALL HAVE A UNIT WEIGHT OF 2,400 kg. PER CUBIC METER UNLESS OTHERWISE NOTED.
   ALL CONCRETE SHALL HAVE A MINIMUM COMPRESSIVE STRENGTH (f'c) AT 28 DAYS AS FOLLOWS:
   a. ALL NORMAL WEIGHT CONCRETE (UON) f'c = 30 MPa
   b. SLABS ON GRADE & FOOTINGS f'c = 30 MPa
   c. MUD SLABS & SLOPED CONC ROOF FILL f'c = 20 MPa
   d. PERIMETER WALLS & CIVIL/SITE f'c = 25 MPa
2. PORTLAND CEMENT TO BE ASTM C150 AS PER SPECIFICATIONS.
3. ALL REINFORCING BARS SHALL BE NEW DEFORMED BILLET STEEL CONFORMING TO ASTM A 706/A 706 M. ASTM A 615/A 615M GRADE 420 (60) REINFORCEMENT SHALL BE PERMITTED PROVIDED THAT THE ACTUAL YIELD STRENGTH IS LESS THAN 540 MPA AND THE RATIO OF THE ACTUAL ULTIMATE STRENGTH TO THE ACTUAL YIELD STRENGTH IS GREATER THAN 1.25 AS DESCRIBED IN THE SPECIFCIATIONS.
4. WELDED WIRE FABRIC (WWF) SHALL CONFORM TO ASTM A-185. WELDED WIRE FABRIC SHALL BE IN SHEET FORM. PROVIDE 150X150 - ø4Xø4 WWF OR ø12@450 EACH WAY FOR CONCRETE TOPPINGS AND FILLS, EXCEPT WHERE OTHERWISE NOTED ON DRAWINGS. LAP TWO SQUARES AT ALL SPLICES AND TIE AT 900 MM O.C.
5. SHOP DRAWINGS SHOWING REINFORCING DETAILS INCLUDING RE-BAR SIZES, SPACING, PLACEMENT AND SUPPORT DETAILS, SHALL BE SUBMITTED TO THE ENGINEER OF RECORD FOR REVIEW AND APPROVAL BEFORE FABRICATION WORK MAY PROCEED.
6. PROVIDE THE FOLLOWING CONCRETE COVER (TABLE 1) FOR ALL REINFORCEMENT. FOR ALL CONDITIONS NOT SHOWN, REFER TO ACI 318 M.

TABLE 1

TYPICAL REINFORCING BAR CONCRETE COVER TABLE

LOCATION	MINIMUM COVER (MM)
CONCRETE CAST AGAINST AND PERMANENTLY EXPOSED TO EARTH	75
CONCRETE EXPOSED TO EARTH OR WEATHER	50
BEAMS (STIRRUPS)	40
COLUMN TIES	40
WALLS (EXTERIOR LAYER)	50*
WALLS (INTERIOR LAYER)	20*, **
FRAMED SLABS (INTERIOR, INCLUDING STAIRS)	20
INTERIOR OF WATER TANK AT UTL BLDG	50
SLAB ON GRADE (WELD WIRE FABRIC)	1/3 SLAB THICKNESS FROM TOP OF SLAB

*CLEAR COVER MEASURED TO WALL STIRRUPS WHEN PRESENT
**WHERE INTERIOR SIDE OF WALL IS EXPOSED TO EARTH, PROVIDE MIN. COVER OF 50MM TO WALL REINF. INCLUDING STIRRUPS.

S.0.01

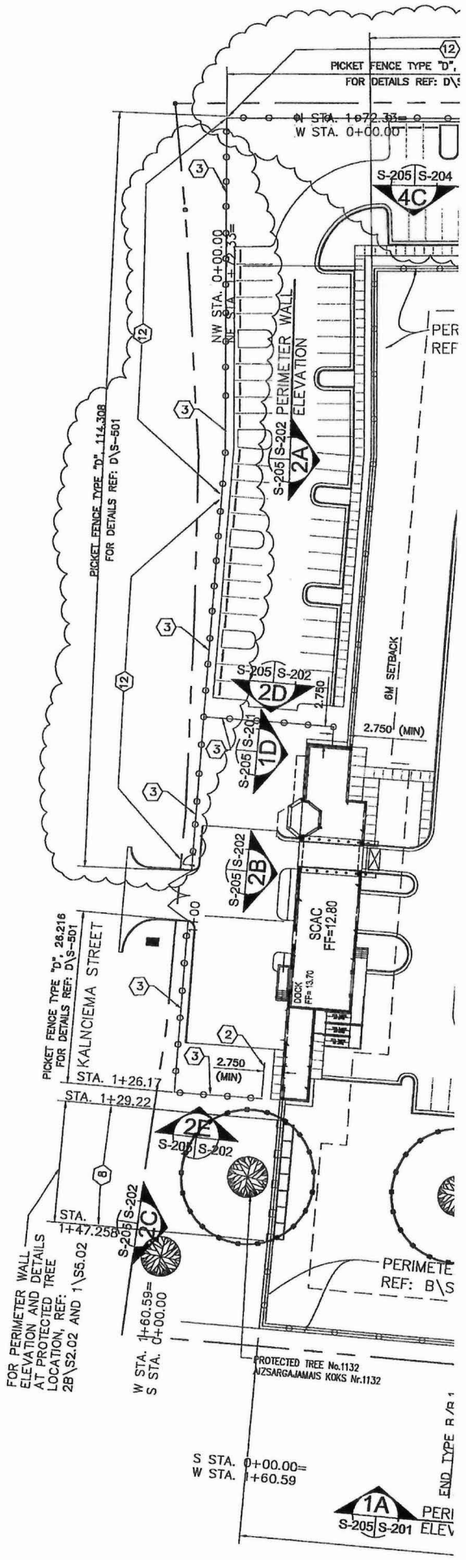

1 PERIMETER WALL KEY PLAN
S-205 S-205 1:400

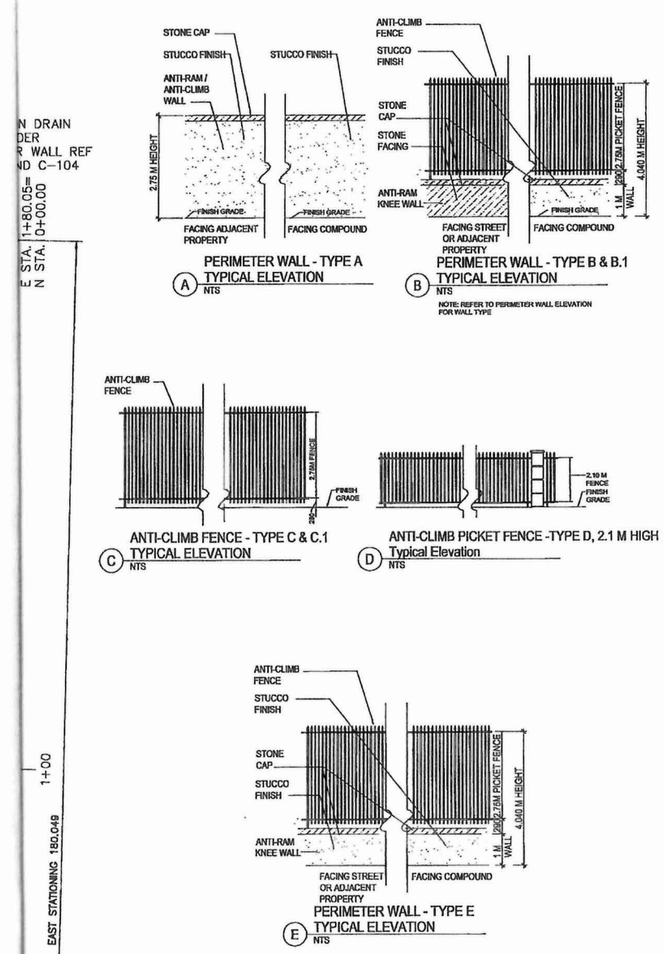

KEY NOTES:

1. ANTI CLIMB PICKET FENCE, TYPE C, FOR DETAILS, REF: C\S5.01 AND THIS SHEET
2. TERMINATE PICKET FENCE, TYPE D, AT THIS LOCATION
3. PICKET FENCE–TYPE D, FOR DETAILS, REF.: D\S5.01 AND DETAIL "D" THIS SHEET
4. FOR CAST IN PLACE CONCRETE WALL AND SLAB, REF.: DETAIL F\C5.04
5. NOT USED
6. MATCH SIDEWALK ELEVATION AT EXERCISE AREA ENTRANCE
7. THIS IS NOT A ANTI–RAM PERIMETER WALL (STA 1+29.390 TO STA 1+46.688) CONCRETE PLANTERS WILL PROVIDE ANTI–RAM PROTECTION.
8. THIS IS NOT A ANTI–RAM PERIMETER WALL (STA 1+29.22 TO STA 1+47.25) CONCRETE PLANTERS WILL PROVIDE ANTI–RAM PROTECTION.
9. EXTEND 65MM PICKET SPACING TO 1ST COLUMN FROM MCAC
10. ANTI CLIMB PICKET FENCES, TYPE C.1, FOR DETAILS REF: C.1\S5.01
11. PICKET FENCE, TYPE "D" WITH 130 O.C. PICKET SPACING, REF: 4E\S2.04
12. PICKET FENCE TYPE "D1" WILL BE REPLACED WITH DETAIL 2\S5.03 TO PROTECT EXISTING TREES

NOTE:

1. PERIMETER WALL STATION ARE FROM OUTSIDE FACE OF WALL.
2. FOR STRUCTURAL WALLS AND FENCE DETAILS OF TYPE A, B, C, D AND E, REF: S5.01

S.205

TopoNet G v4.0
LKS 92
Koordin?tu izdruka

PtNr	X	Y	H
5	309677.392	501837.136	12.071
6	309596.951	501688.149	12.551
7	309706.123	501670.164	12.003
8	309770.699	501754.993	12.025

SITE NORTH

FOR PERIMETER WALL ELEVATION AND DETAILS AT PROTECTED TREE LOCATION, REF: 1B\S2.01 AND 2\S5.02

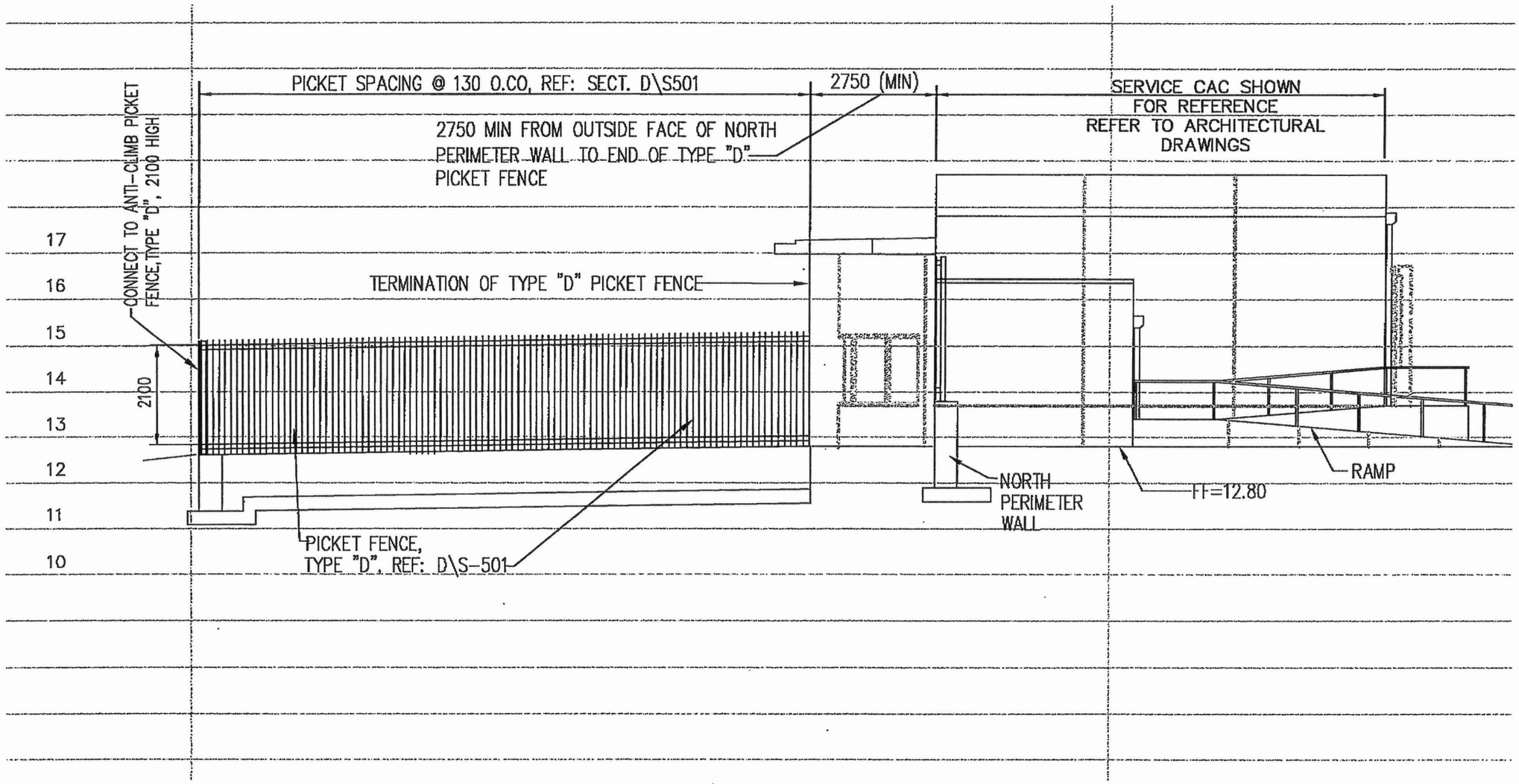

2E SOUTH PICKET FENCE ELEVATION

S-202 | S-205

SCALE: H=1:100
V= 1:10

3.2.02

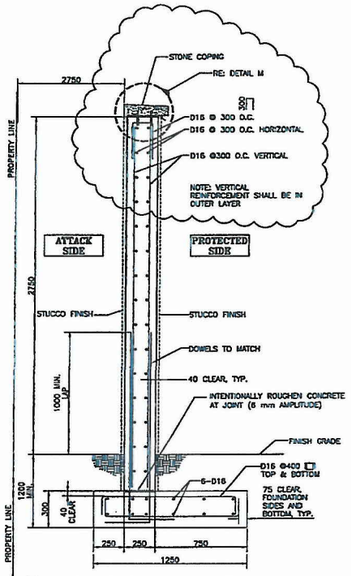

A ANTI-RAM FULL HEIGHT WALL (TYPE A)
S2.05SS.01 NTS

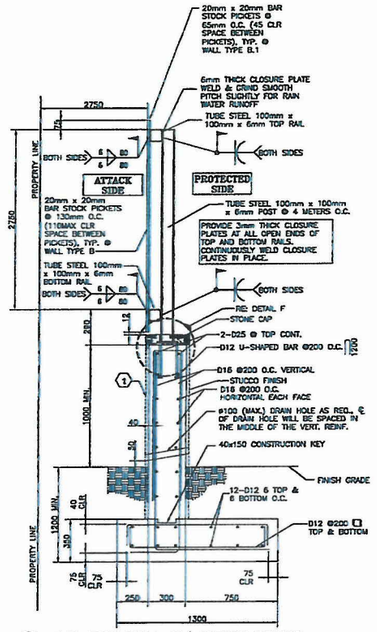

B ANTI-RAM WALL W/ PICKET FENCE (TYPE B)
S2.05SS.01 NTS

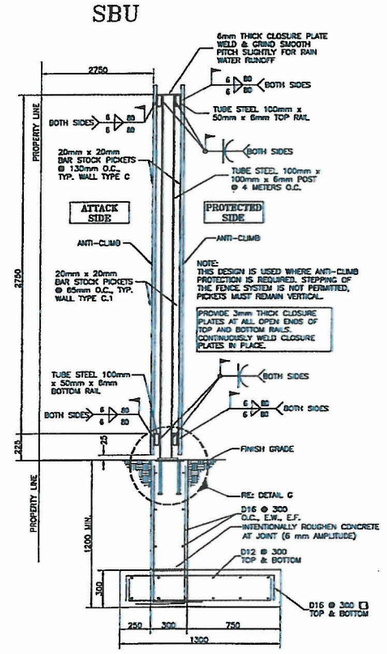

C ANTI-CLIMB FENCE (TYPE C)
S2.05SS.01 NTS

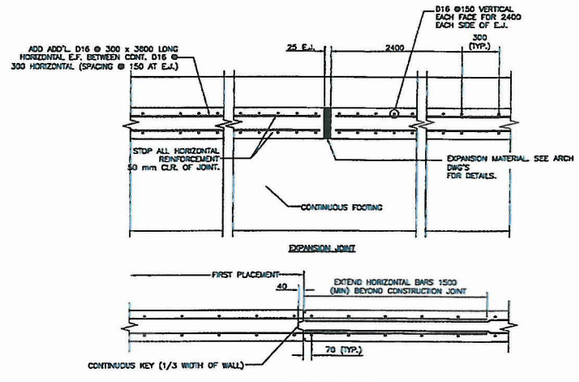

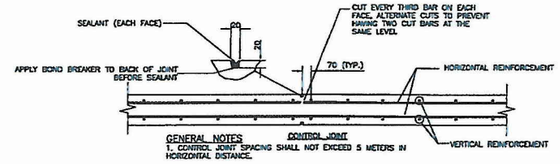

GENERAL NOTES
1. CONTROL JOINT SPACING SHALL NOT EXCEED 5 METERS IN HORIZONTAL DISTANCE.
2. EXPANSION JOINT SPACING SHALL NOT EXCEED 30 METERS IN HORIZONTAL DISTANCE.
3. ALL LAP SPLICES FOR HORIZONTAL BARS SHALL BE 1500.
4. DO NOT SPLICE HORIZONTAL REINFORCEMENT WITHIN 1500 OF JOINT.

K JOINTS DETAILS ANTI-RAM FULL HEIGHT WALL
S2.05SS.01 NTS

GENERAL

1. CONSTRUCTION METHODS, PROCEDURES AND SEQUENCES ARE THE CONTRACTOR'S RESPONSIBILITY AND THE CONTRACTOR SHALL TAKE ALL THE NECESSARY MEANS TO MAINTAIN AND PROTECT THE STRUCTURAL INTEGRITY OF ALL CONSTRUCTION AT ALL STAGES.

2. ALL THE CONTRACTOR'S PROPOSED SUBSTITUTIONS SHALL BE EQUIVALENT OR BETTER AND SHALL BE REMOVED BY THE COR PRIOR TO ANY PERTINENT WORK.

3. NOT ALL OPENINGS AND OTHER PROJECT COMPONENTS THAT ARE REQUIRED HAVE BEEN SHOWN ON THE STRUCTURAL DRAWINGS.

4. COORDINATE WITH THE ARCHITECTURAL, MECHANICAL, PLUMBING AND ELECTRICAL DRAWINGS AND VERIFY THE LOCATION AND SIZES OF ALL CHASES, INSERTS, OPENINGS, SLEEVES, FINISHES, DEPRESSIONS, PADS AND OTHER PROJECT REQUIREMENTS.

5. THE CONTRACTOR SHALL BE RESPONSIBLE FOR REVIEWING THE MECHANICAL, ELECTRICAL, PLUMBING AND ARCHITECTURAL DRAWINGS TO DETERMINE WHERE OPENINGS ARE REQUIRED IN THE REINFORCED CONCRETE WALLS, BEAMS AND SLABS.

6. ALL CONSTRUCTION JOINTS SHOWN ON THE STRUCTURAL DRAWINGS SHALL BE INCORPORATED INTO THE STRUCTURE. ADDITIONAL CONSTRUCTION JOINTS TO FACILITATE CONSTRUCTION SHALL BE LOCATED AND DETAILED ON THE SHOP DRAWINGS.

7. HORIZONTAL CONSTRUCTION JOINTS SHALL NOT BE PERMITTED IN THE WALLS AND BEAMS UNLESS SHOWN ON THE STRUCTURAL DRAWINGS.

8. ALL DIMENSIONS SHOWN ARE IN MILLIMETER(mm) UNLESS OTHERWISE NOTED.

9. PROVIDE WALL EXPANSION JOINT AT LOCATIONS WHERE A WALL ABUTS A BUILDING SUPPORT.

10. SEE CIVIL DRAWINGS FOR WEEP HOLE AND DRAINAGE REQUIREMENTS.

11. SEE ARCHITECTURAL DRAWINGS FOR FINISH REQUIREMENTS.

12. SEE SITE WALL ELEVATIONS FOR TOP OF FOOTINGS, WALLS, AND FENCES.

13. CONTRACTOR SHALL BE RESPONSIBLE TO PLACE 100mm-DIA. DRAINAGE PIPE IN THE MIDDLE OF THE WALL VERTICAL REINFORCEMENT.

FOUNDATIONS

1. ALL FOUNDATIONS SHALL BE CONSTRUCTED IN EXCAVATIONS FREE OF STANDING WATER, FROZEN SOIL OR OTHER DELETERIOUS MATERIALS

2. BACKFILL MATERIAL, PLACING & COMPACTION OF BACKFILL SHALL BE IN ACCORDANCE WITH THE DRAWINGS & THE SPECIFICATIONS.

3. DESIGN BASED ON ALLOWABLE BEARING PRESSURE OF 100 kPa FOR FOOTING CONSTRUCTION ON NEW STRUCTURAL FILL AND STRATUM A. SEE LATEST GEOTECHNICAL REPORT BY SCHNABEL ENGINEERING DATED JULY 14, 2009 AND ADDENDUM NO 1, DATED JULY 14, 2009

CONCRETE

1. ALL CONCRETE SHALL HAVE A MINIMUM 28 DAY COMPRESSIVE STRENGTH OF 25 MPa.

REINFORCING STEEL

1. STEEL REINFORCEMENT SHALL COMPLY WITH ASTM A 706/A 706M. ASTM A 615/A 615M GRADE 420 (60) REINFORCEMENT SHALL BE PERMITTED IF:

A. THE ACTUAL YIELD STRENGTH BASED ON MILL TESTS DOES NOT EXCEED THE SPECIFIED YIELD STRENGTH BY MORE THAN 120 MPa. (RETESTS SHALL NOT EXCEED THIS VALUE BY MORE THAN AN ADDITIONAL 20 MPa); AND

B. THE RATIO OF THE ACTUAL ULTIMATE TENSILE STRENGTH TO THE ACTUAL TENSILE YIELD STRENGTH IS NOT LESS THAN 1.25.

2. REINFORCING BAR DEVELOPMENT LENGTHS:

BAR SIZE GRADE 420	Ld FOR TOP BARS (mm)		Ld FOR BOTTOM BARS (mm)	
	LAP	ANCHORAGE	LAP	ANCHORAGE
D12	660	660	660	510
D16	1070	830	830	640
D20	1290	990	990	760
D25	2150	1650	1650	1270
D32	2730	2100	2100	1610

3. THE LAP SPLICE LENGTHS FOR REINFORCING BARS SHALL BE 1.3 TIMES THE Ld NOTED IN NOTE NO. 2 ABOVE.

A. WHEN TWO BARS OF DIFFERENT SIZES ARE LAPPED, THE SMALLER BAR SIZE SHALL GOVERN THE LAP LENGTH UNLESS SPECIFICALLY NOTED OTHERWISE.

B. MECHANICAL SPLICES CAPABLE OF DEVELOPING 125% OF THE BAR YIELD STRENGTH MAY BE USED IN LIEU OF THE LAPS.

4. THE GENERAL NOTES, LAP LENGTHS OR DETAILS PERTAINING TO REINFORCING STEEL AS SHOWN ON THE DETAIL SHEETS OR OTHER SCHEDULES SHALL SUPERSEDE THE NOTES SHOWN ON THIS SHEET.

KEY NOTES:

1. STONE FACING- EXCEPT ON EAST WALL WHICH WILL BE STUCCO FINISH, REF: S-205 AND S-203

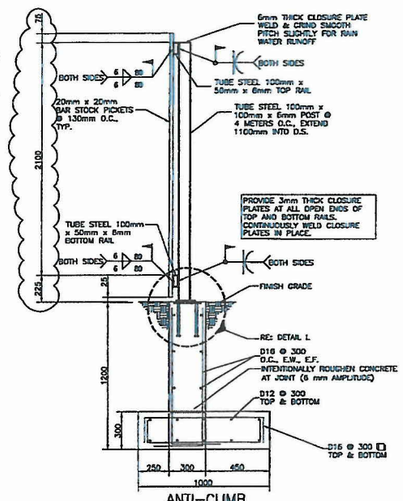

D ANTI-CLIMB 2.1M PICKET FENCE (TYPE D)
S2.05SS.01 NTS

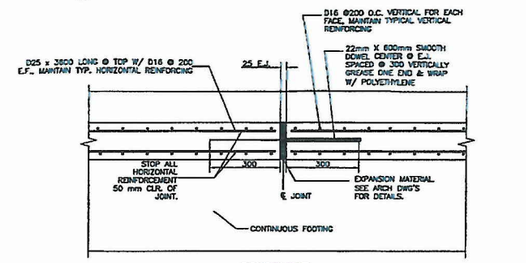

GENERAL NOTES
1. CONTROL JOINT SPACING SHALL NOT EXCEED 5 METERS IN HORIZONTAL DISTANCE.
2. EXPANSION JOINT SPACING SHALL NOT EXCEED 30 METERS IN HORIZONTAL DISTANCE.
3. ALL LAP SPLICES FOR HORIZONTAL BARS SHALL BE 1500.
4. DO NOT SPLICE HORIZONTAL REINFORCEMENT WITHIN 1500 OF JOINT.

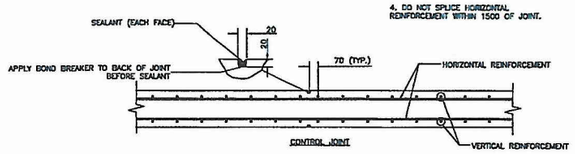

E JOINTS DETAILS ANTI-RAM KNEE WALL W/ PICKET FENCE
S2.05SS.01 NTS

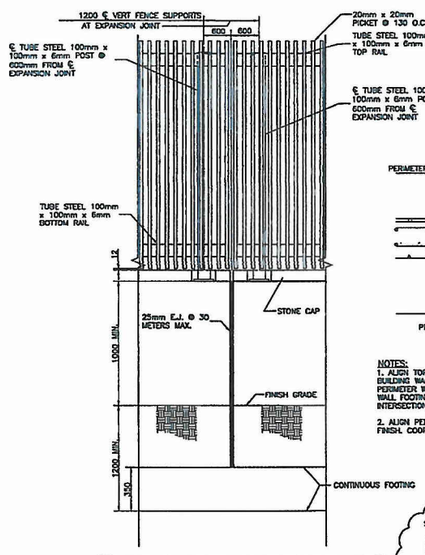

H TYPICAL DETAIL AT EXPANSION JOINT FOR WALL W/ PICKET FENCE
S2.05SS.01 NTS

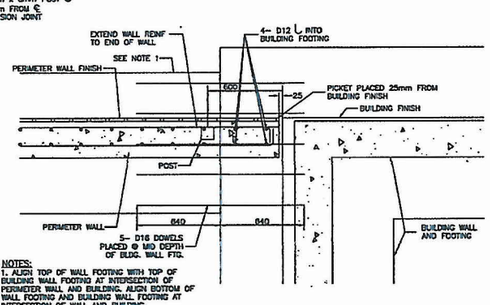

NOTES:
1. ALIGN TOP OF WALL FOOTING WITH TOP OF BUILDING WALL FOOTING AT INTERSECTION OF PERIMETER WALL AND BUILDING. ALIGN BOTTOM OF WALL FOOTING AND BUILDING WALL FOOTING AT INTERSECTION OF WALL AND BUILDING.

2. ALIGN PERIMETER WALL FINISH WITH BUILDING FINISH. COORDINATE WITH ARCHITECTURAL DRAWINGS.

J TYPICAL DETAIL AT INTERFACE OF PERIMETER WALL AND BUILDING
S2.05SS.01

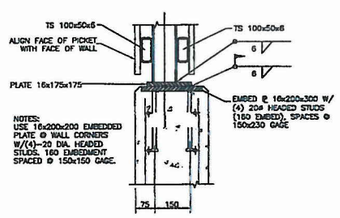

NOTES:
USE 16x200x200 EMBEDDED PLATE @ WALL CORNERS W/(4)-20 DIA. HEADED STUDS. 160 EMBEDMENT SPACED @ 150x150 GAGE.

DETAIL G
NTS

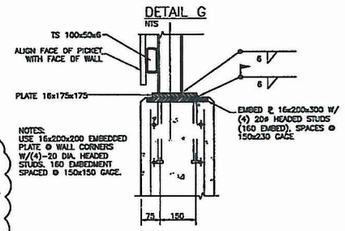

NOTES:
USE 16x200x200 EMBEDDED PLATE @ WALL CORNERS W/(4)-20 DIA. HEADED STUDS. 160 EMBEDMENT SPACED @ 150x150 GAGE.

DETAIL L
NTS

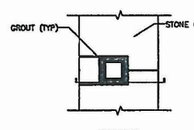

DETAIL F
NTS

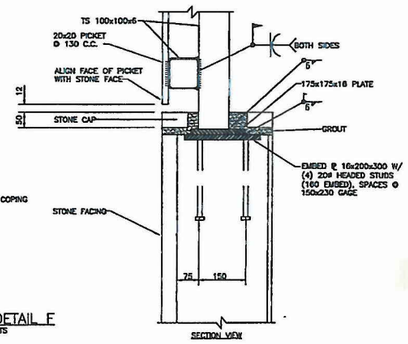

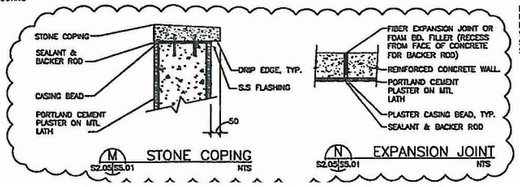

M STONE COPING
S2.05SS.01 NTS

N EXPANSION JOINT
S2.05SS.01 NTS

S.5.01

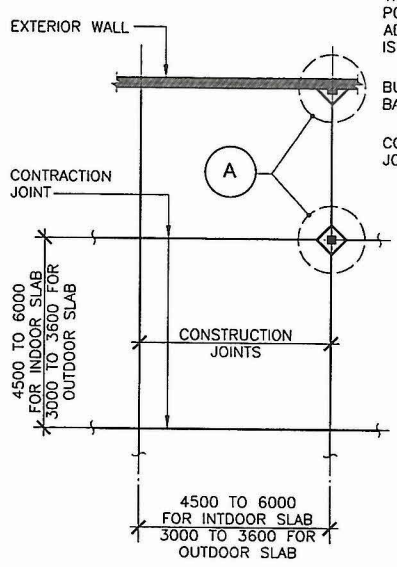

JOINT LAYOUT

NOTE: CAST SLAB IN A LANE PATTERN

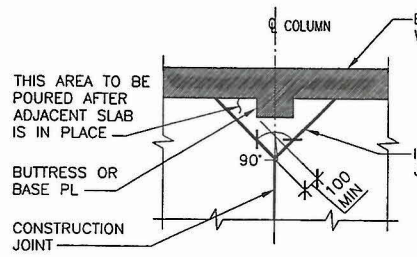

EXTERIOR COLUMN

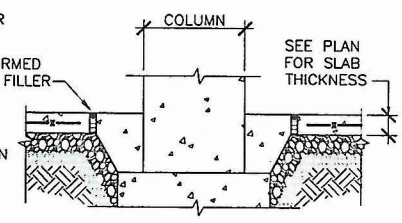

ISOLATION JOINT AT COLUMN

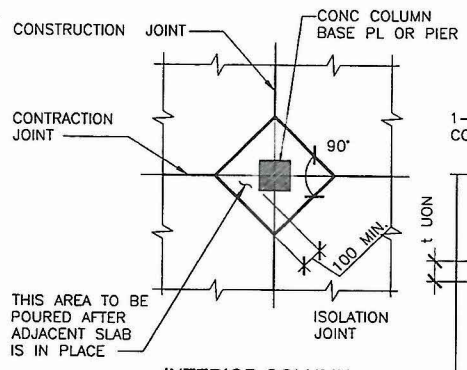

INTERIOR COLUMN

PLAN DETAILS (A)

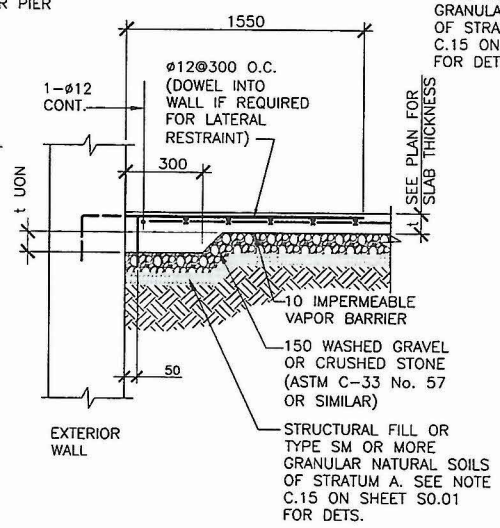

EXTERIOR WALL

1 S6.95 S6.95 TYPICAL SLAB ON GRADE DETAILS

SBU

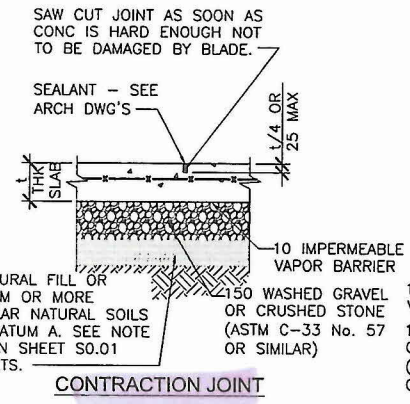

CONTRACTION JOINT

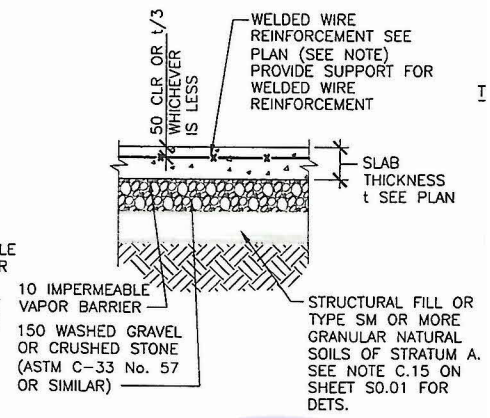

CROSS SECTION

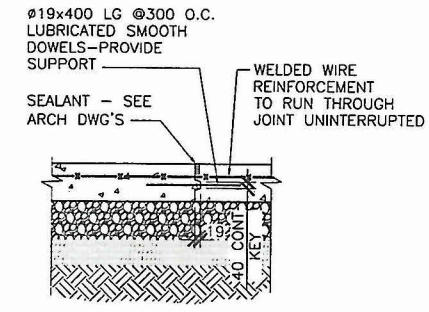

CONSTRUCTION JOINT

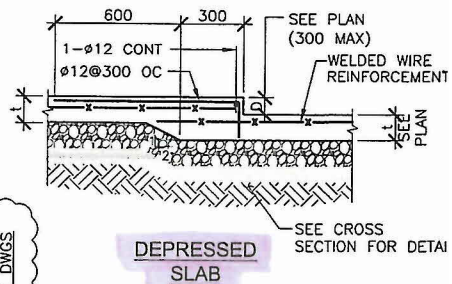

DEPRESSED SLAB

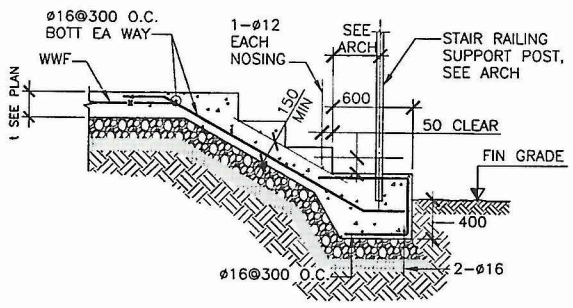

3 S6.95 S6.95 TYP STAIR ON GRADE

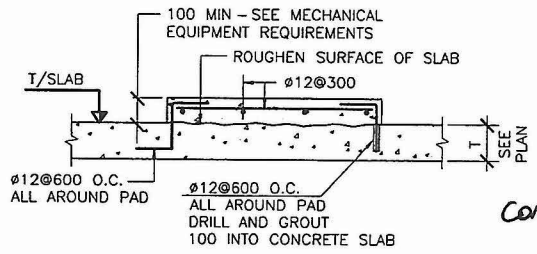

4 S6.95 S6.95 CONCRETE PAD FOR MEP EQUIPMENT

NOTE: CONTRACTOR MAY UTILIZE EITHER EMBEDED BARS OR DRILLED DOWELS AS SHOWN.

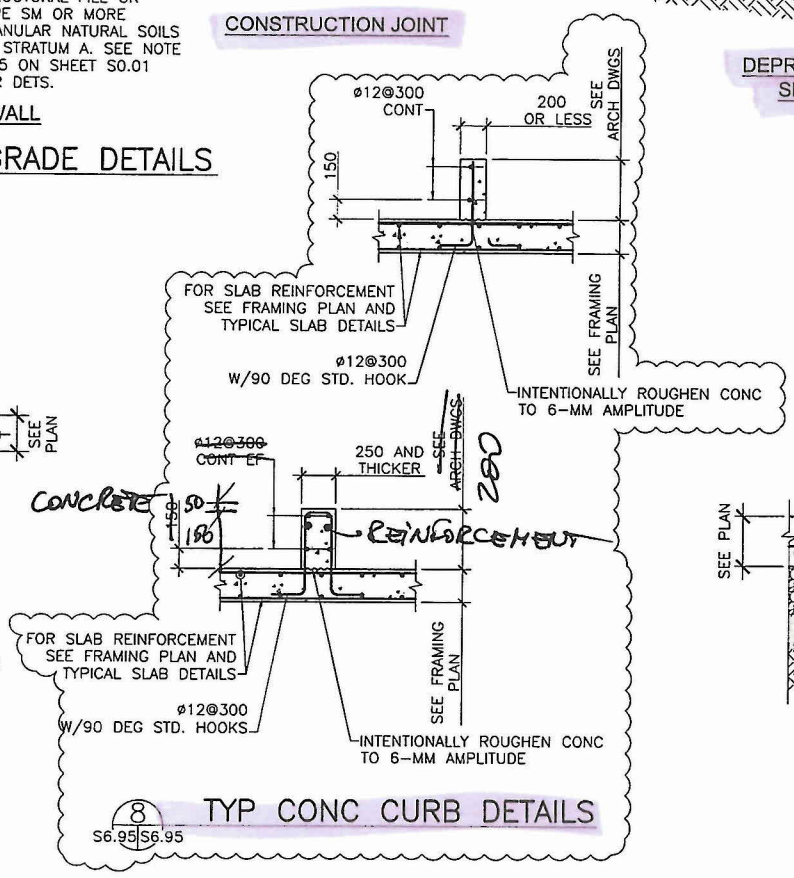

8 S6.95 S6.95 TYP CONC CURB DETAILS

GATE SEE ARCH DWGS AND GATE MANUFACTURER

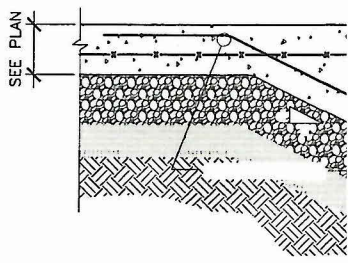

GA
SEE ARCH DWG
AND GATE MANUFACTURE

GATE TRACK EMBED SEE GATE MANUFACTURER

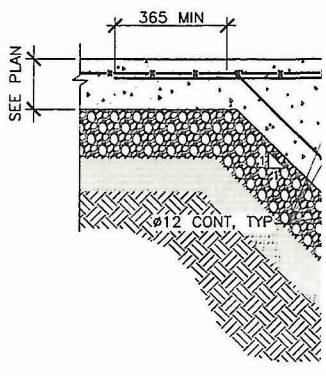

E

7 S6.95 S6.95 TYPICAL

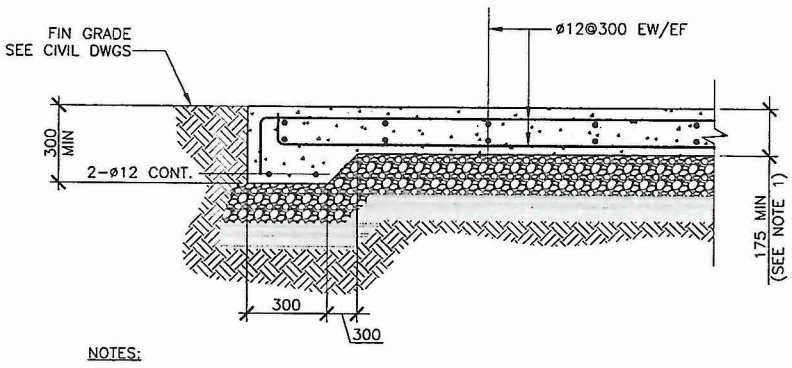

NOTES:

1. COORDINATE SLAB THICKNESS W/EQUIPMENT ANCHORAGE REQUIREMENTS. SEE EQUIPMENT MANUFACTURER FOR ADD'L INFO.

5 S6.95 S6.95 TYPICAL EXTERIOR SLAB-ON-GRADE SUPPORTING MEP EQUIP. DETAIL

SCALE: NONE

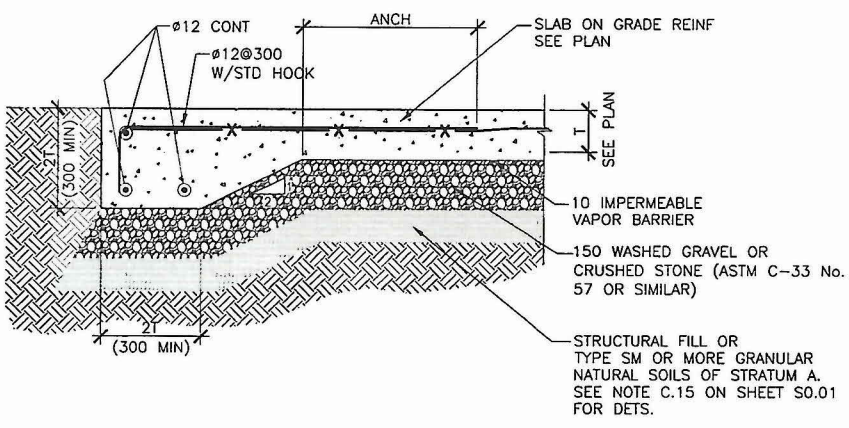

6 S6.95 S6.95 TYPICAL SLAB ON GRADE W/THICKENED EDGE DETAIL

S.6.95.

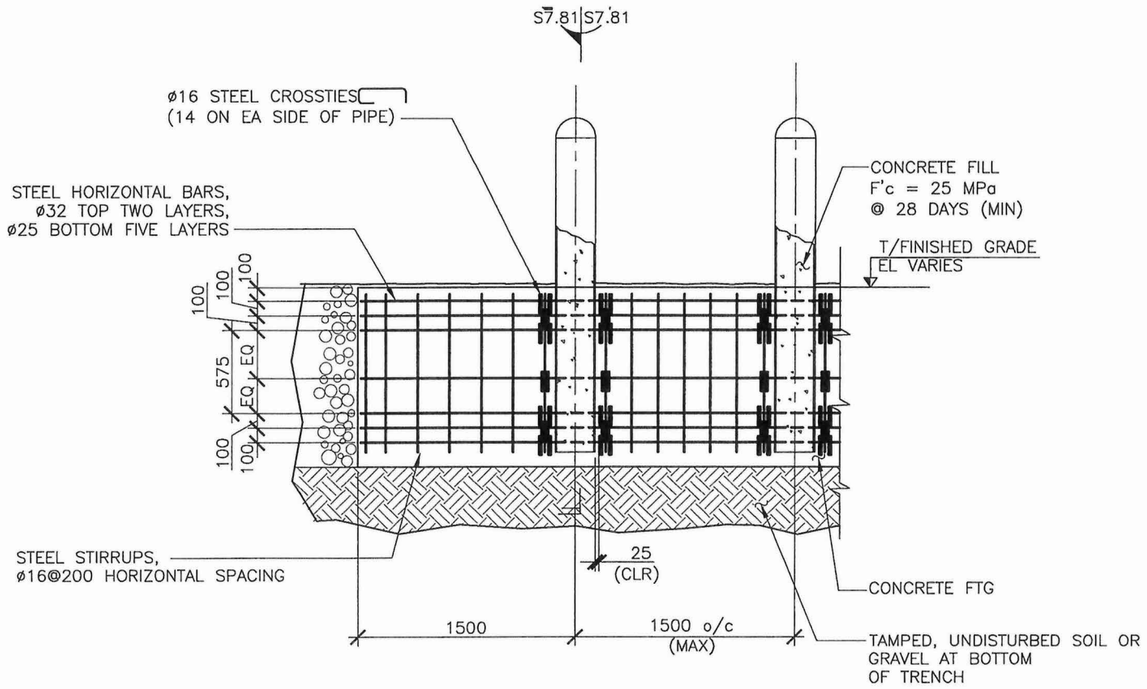

1 TYPICAL ANTI–RAM BOLLARD ELEVATION

S7.81 S7.81 SCALE 1:25

NOTES:
1. BOLLARDS TO BE SPACED AT 1500 O/C MAX.
2. ON EACH SIDE OF PIPE, STEEL TIES MAY BE STAGGERED TO FIT.

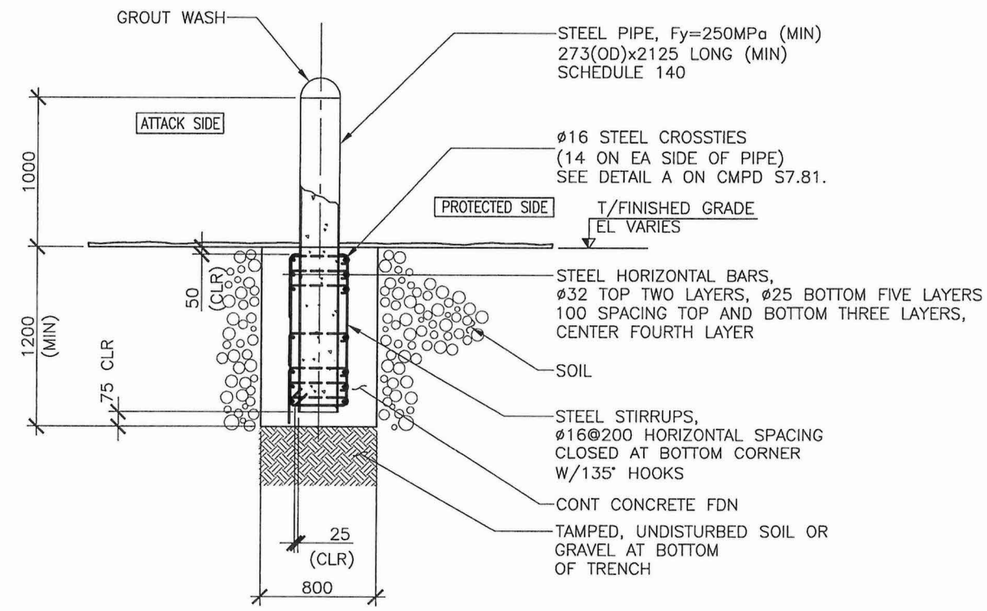

2 SECTION

S7.81 S7.81 SCALE 1:25

NOTES:
1. PLACE 90° HOOK OF CROSSITES ON ATTACK SIDE OF FOOTING.
2. HORIZONTAL BARS TO BE CONTINUOUS; SLICED USING STAGGERED, CLASS–A TENSION SPLICES.

A
S7.81 S7

S.781.