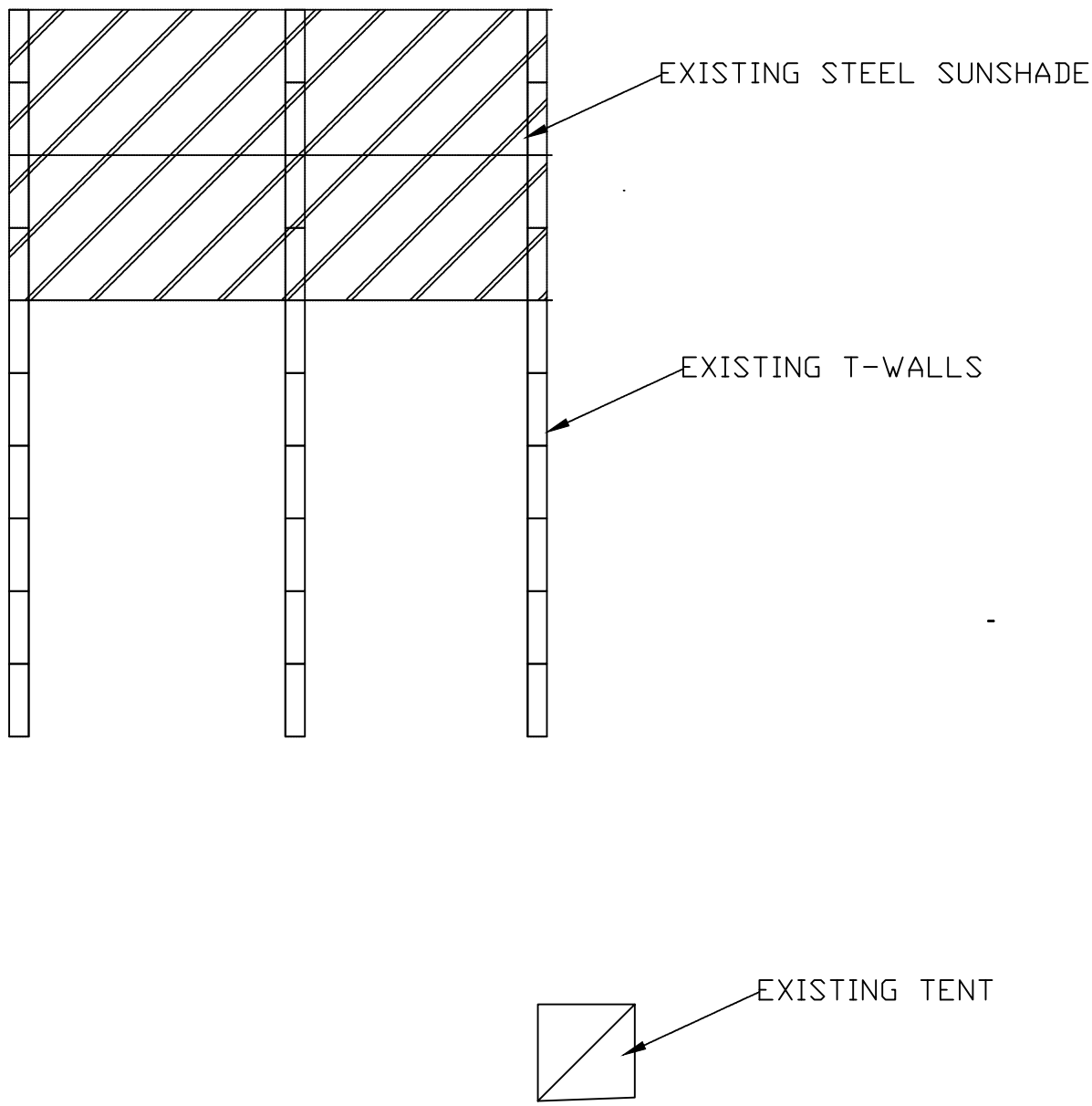


1
A1

# SITE PLAN

Scale NONE

U.S. Department of State

OFFICE OF
OVERSEAS BUILDINGS OPERATIONS
Washington, D.C.

U.S. EMBASSY BAGHDAD
IRAQ

WARNING: This document is the property of the U.S. Government. Further reproduction and/or distribution outside the contractor team is prohibited without the express written approval of:
U.S. Department of State Washington, DC 20520

| Rev Number | Description | Date |
|---|---|---|
| Revisions | | |

US EMBASSY, BAGHDAD
FACILITY MANAGEMENT
ANNEX 1
tel: 560-3508
BaghdadFacilityManagement@STATE.GOV

Release For Construction:

SITE PLAN
ECP1 SUNSHADE CONSTRUCTION

XXX% SUBMISSION
XXX 2011

| | |
|---|---|
| OBO Project Number: PROJ_NO | Drawing Scale: N/A |
| CADD File Name: CAD_NAME | CADD Plot Scale: 1:1 |

Phase: ☐ CONCEPT ☐ SDS ☐ 60% ☐ 90% ☐ 100% ☐ FINAL

23 AUG 2012

Drawn By: XXX
Checked By: XXX
Project Number: FY XX PROJ XX
Sheet Number: A1
Classification: SBU SENSITIVE BUT UNCLASSIFIED

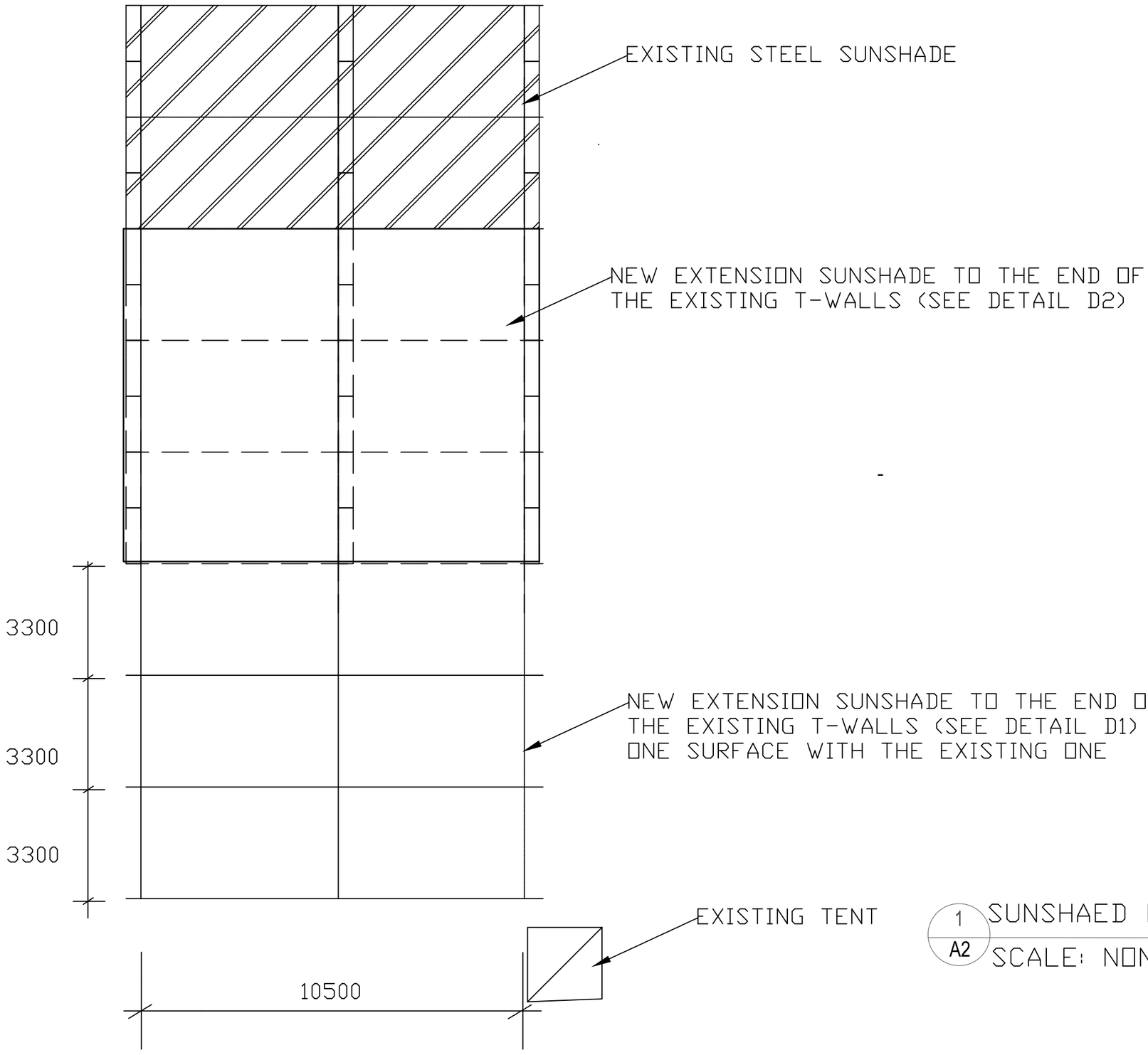


1 / A2 SUNSHAED EXTENSION PLAN

SCALE: NONE

00/00/2010

Drawn By xxx

Checked By xxx

Project Number FY XX PROJ XX

Classification SBU SENSITIVE BUT UNCLASSIFIED

Sheet Number C1

100% SUBMISSION
Nov 2011

OBO Project Number PROJ_NO

Drawing Scale N/A

CADD File Name CAD_NAME

CADD Plot Scale 1:1

Phase

SUNSHADE EXTENSION PLAN

Release For Construction:

Rev Number | Description | Date

Revisions

US EMBASSY, BAGHDAD
FACILITY MANAGEMENT
ANNEX 1
tel: 560-3508
BaghdadFacilityManagement@STATE.GOV

NEC COMPOUND
for
U.S. EMBASSY BAGHDAD
IRAQ

WARNING: This document is the property of the U.S. Government. Further reproduction and/or distribution outside the contractor team is prohibited without the express written approval of:
U.S. Department of State Washington, DC 20520

U.S. Department of State

OFFICE OF
OVERSEAS BUILDINGS OPERATIONS
Washington, D.C.

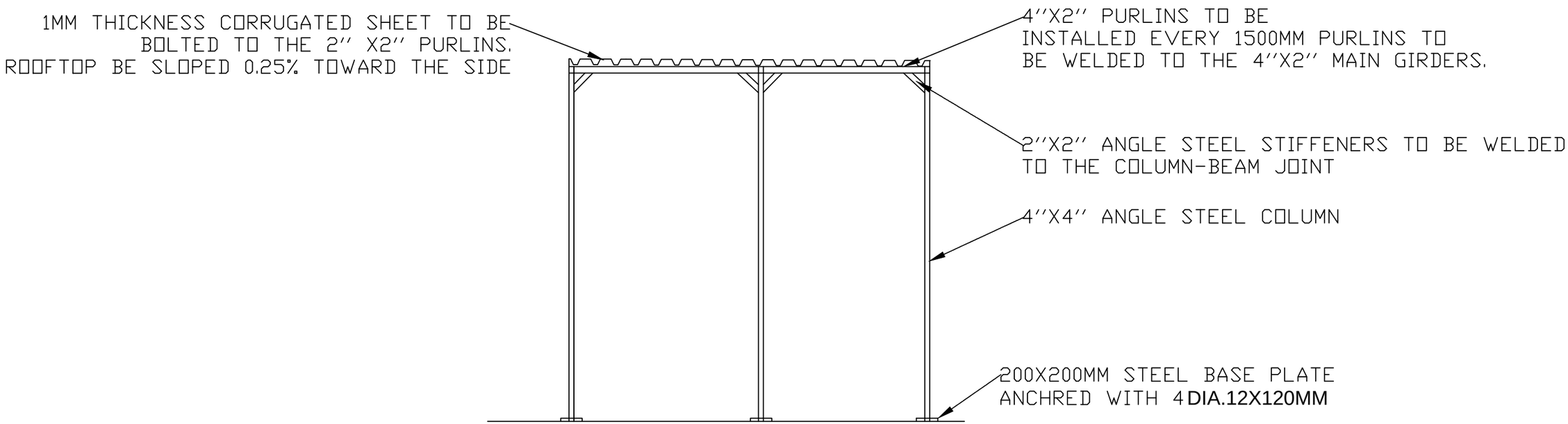


1 / A3 DETAIL D1
Scale NONE

U.S. Department of State
OFFICE OF OVERSEAS BUILDINGS OPERATIONS
WASHINGTON, D.C.

U.S. EMBASSY
BAGHDAD
IRAQ

WARNING: This document is the property of the U.S. Government. Further reproduction and/or distribution outside the contractor team is prohibited without the express written approval of:
US Department of State Washington, DC 20520

UNITED STATES EMBASSY
BAGHDAD

FACILITY MAINTENANCE
ANNEX 1, 3rd FLOOR

PHONE: 560-3508
BaghdadFacilityManagement@STATE.GOV

OBO/PE/PM | OBO/PE/BDE

DETAIL D1

Revisions

| | |
|---|---|
| OBO Project Number | PROJ_NO |
| Drawing Scale | 1:XXX |
| CADD File Name | CAD_NAME |
| CADD Plot Scale | 1:1 |
| Phase | ☐ CONCEPT ☐ SDR ☐ MDR ☐ NDR ☐ FINAL |

10 JUN 2013

| | |
|---|---|
| Drawn By | XXXXXXXXX |
| Checked By | XXXXXXX |
| Project Number | XXXXXXXX |
| Sheet Number | A3 |

Classification SBU SENSITIVE BUT UNCLASSIFIED

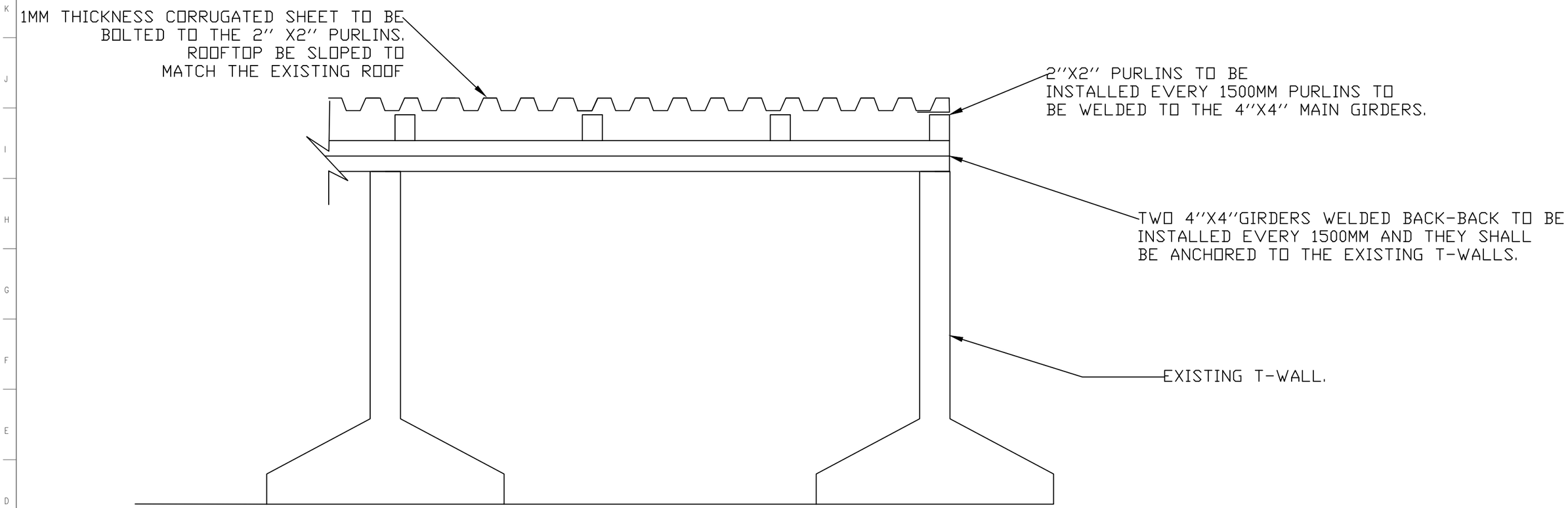


1 / A4 **D2 DETAIL**
Scale NONE

U.S. Department of State
OFFICE OF OVERSEAS BUILDINGS OPERATIONS
WASHINGTON, D.C.

U.S. EMBASSY
BAGHDAD
IRAQ

WARNING: This document is the property of the U.S. Government. Further reproduction and/or distribution outside the contractor team is prohibited without the express written approval of:
US Department of State Washington, DC 20520

UNITED STATES EMBASSY
BAGHDAD

FACILITY MAINTENANCE
ANNEX 1, 3rd FLOOR

PHONE: 560-3508
BaghdadFacilityManagement@STATE.GOV

OBO/PE/PM | OBO/PE/BDE

DETAIL D2

Revisions

| | |
|---|---|
| OBO Project Number: PROJ_NO | Drawing Scale: 1:XXX |
| CADD File Name: CAD_NAME | CADD Plot Scale: 1:1 |

Phase: ☐ CONCEPT ☐ SDR ☐ ADR ☐ MDR ☐ HDR ☐ FINAL

10 JUN 2013

Drawn By: XXXXXXXXX
Checked By: XXXXXXXX
Project Number: XXXXXXXX
Sheet Number: A3

Classification SBU SENSITIVE BUT UNCLASSIFIED