STATEMENT of WORK

Replacement / Repair
For
Cable Distribution Network

U.S. CONSULATE
Erbil, IRAQ

4th Apr 2016

TABLE OF CONTENTS

1.0 PROJECT DESCRIPTION: 2
1.1. Project Synopsis 2
1.2. Background 2
1.3. Solution 2
2.0 GENERAL CONDITIONS: 3
3.0 BID FORM: 5
4.0 SCOPE OF WORK: 6
4.1. General Requirements 6
4.2. Defining Key Terms 7
4.3. Surveying and labeling 8
4.4. Closeout 8
5.0 PROJECT SCHEDULE ..... **Error! Bookmark not defined.**
6.0 RESPONSIBILITIES AND PROJECT MANAGEMENT 9

Attachments:

TELEVES Modulator

TELEVES Fiber TX

TELEVES Fiber RX

TELEVES Amplifier

Diagram of Network

1.0 PROJECT DESCRIPTION:

1.1. PROJECT SYNOPSIS

The project is described as "To perform restore quality services to the existing cable distribution network via High Definition DVB-T. Than continue to perform preventative Maintenance and Emergency Maintenance to the Cable Distribution Network at the US Consulate, Erbil, Iraq."

The Contractor shall be required to furnish all necessary materials, labor, transportation, equipment, investigation and supervision, etc unless otherwise stipulated in this Scope of Work. Work will be performed within a fixed-price contract.

1.2. BACKGROUND

Currently at the US Consulate, Erbil there is a cable distribution network presently using both Fiber-Optic and Coaxial cabling to deliver High Definition (HD) Channels from both Orbit Showtime Network (OSN) and the Armed Forces Network (AFN) from the cable room to various bedrooms and businesses on the compound. The quality of this distribution system has been both poor and degrading since acceptance. This system presently is broadcasting this HD signal in Standard Definition (SD).

Attached at the end of this Scope of Work is the current equipment used in the system.

1.3. SOLUTION

Improve the quality of life for the compound residents by hiring a telecom company to repair, monitor, maintain, and improve the currently established cable distribution network.

2.0 GENERAL CONDITIONS:

1. **Fixed-Price Proposal** The Contractor shall provide one fixed-priced Proposal for the complete Project that includes every aspect of the Work outlined.

2. **Execution** The Work shall be executed in a diligent and professional manner in accordance with the negotiated fixed-price in this Scope of Work, the Project Schedule, and the laws of the City of Erbil where applicable.

3. **Working Hours** Unless otherwise agreed with Contracting Officers Representative (COR) or the Contracting Officer (CO), the Work shall be executed during normal Embassy work hours (0800 – 1700 Sunday - Thursday). Working on Nights, Weekends or holidays shall not be permitted except during an Emergency Situation as defined in this SOW or if arranged with the COR/CO in advance. Embassy holiday schedule is available upon request from the CO or COR and should be provided at the start of each calendar year or whenever a change is made.

4. **Safety** The Contractor shall be responsible for conducting the work in a manner that ensures the safety of residents, employees / visitors to the Consulate, and indeed the contractors themselves. All damages to personal, equipment, or buildings will be the responsibility of contractor and not the U.S. Government.

5. **Workforce** The contractor shall provide all supervision, skilled and unskilled labor needed to perform the work. The contractor shall be able to provide 24-7 one certified engineer to perform the maintenance and preventative maintenance tasks laid out in this statement of work. If a call for maintenance is received and the contractor is unable to provide services due to personnel administration issues, the Government will charge the contractor a fee. The contractor shall comply with Embassy security policy by providing embassy approved escorts, if the representative does not pass vetting the contractor will have maximum one month to provide a new engineer. Contractor provided escorts shall be in quantity sufficient to comply with RSO escort ratios for number of workers on the project. The contractor shall prepare requests to RSO for vetting of employees to get escort badges, the CO/COR should proof read the package to make sure all required data is provided. The Contractor or government may request for workers to be badged for unescorted Embassy access by going through RSO vetting process. All workers must submit vetting paperwork before contract is awarded.

6. **Subcontractors** Contractor shall be responsible for the conduct and workmanship of Subcontractors engaged in the Project, and for Subcontractors compliance with the terms of this Statement of Work. The Contractor is responsible for the behavior and workmanship of Subcontractors while on Consulate property. The Government is not responsible for any wages or costs incurred through the use of a subcontractor. Any failure to properly perform the work laid out in this Scope of Work will lie solely on the company contracted to perform the work. All supervision of subcontractors will be the responsibility of the awarded contractor.

7. **Modification to Contract** The Contractor shall not incur any costs beyond those described in this SOW unless directed otherwise in writing by the Contracting Officer. Any work performed by

the Contractor beyond this SOW without written direction from the Contracting Officer will be at the Contractor's own risk and at no cost to Consulate Personnel or the US Government.

8. **Stop Work** At any time during the Project, the Contracting Officer reserves the right to Stop Work for protection of employees or visitors, security, or any other reason at his/her discretion.

9. **Submittals** The contractor is responsible to maintain an accurate diagram of the wiring scheme from Satellite dishes, through the receiving point, all the way to the viewing points. The contractor will be responsible to maintain wiring labels throughout the cable distribution network. Labels shall clearly indicate both source and destination of each wire on both ends of the connection.

10. **Removing Existing Wiring** The contractor is responsible to provide 48-hour advance notice to the COR before removing any existing wiring if required.

11. **Close-out** Prior to final acceptance, the contractor is to submit to the COR marked up drawings (As-Built) reflecting the work as constructed. These drawings should be submitted to the COR in digital formats such as Portable Document Format (PDF).

12. **Housekeeping** The contractor is responsible to clean up in each location work is performed before they leave that location, the COR will inspect to ensure this is completed before the contractor leaves for the end of each day.

3.0 BID FORM:

Pricing Schedule for Services

U.S. CONSULATE GENERAL ERBIL

No	Descriptions	Estimated Quantity	Unit	Unit Price $	Total Price $
1	Repair existing cable distribution network at the consulate general Erbil. Using High Definition equipment over DVB-T signal.				
2	1 year of warranty (Bank Guarantee is required)				
3	DBA Insurance				
Total					

* Indicates an item that is partially purchased/or installed, a quantity may be adjusted overtime to supply demand by CO/COR.

4.0 SCOPE OF WORK:

"To repair the established Cable Distribution system at the Consulate General Erbil, Iraq. This system shall provide reliable HD signal from the OSN and AFN networks to each and every viewpoint. Afterword's establish and maintain a service providing: preventative maintenance, expansion capability, and 24/7 emergency maintenance response to the US Consulate, Erbil, Iraq's cable distribution network."

The network currently consists of one distribution room, two satellite dishes, forty OSN decoders, ten AFN decoders, TELEVES distribution equipment, sixty eight (68) villas, and two hundred and sixty two (262) drops.

The Contractor will be required to furnish all necessary materials, labor (both skilled and unskilled), transportation, equipment, security investigation documentation, and supervision etc.

4.1. GENERAL REQUIREMENTS

a. Within 5 days of Notice to Proceed (NTP), the contractor shall provide to the COR a project schedule showing start to completion including significant milestones. The Period of performance of this project is 60 calendar days.

b. Within 5 days of Notice to Proceed "NTP", the Contractor shall provide to the COR details of the proposed installation utilizing written description and sketches of proposed network schema.

c. The contractor is solely responsible to maintain a clean working environment at the Consulate compound. This will include, but not limited to, the proper storage of extra Government Furnished Property (GFP), Extra Fiber Optic Lines and support materials, Extra Coaxial Lines and support materials, and finally tools and testing equipment. The contractor will also remove all trash from the Consulate compound, this means not using the Consulates trash removal services to dispose of: old infrastructure, package materials, or batteries.

d. Contractor will be required to purchase all their own products to complete the system repair/upgrade to HD over DVBT. Contractor shall keep on hand at the consulate replacement parts to allow for quicker repairs during the repair phase.

e. Contractor will be required to upgrade the system from its current status to HD over DVBT.

f. The contractor will be limited to the workspaces provided by GSO, it is there responsibility to keep all materials and tools kept on site in this provided space. All materials kept on site are subject to search and seizure by U.S. Authorities for security reasons.

g. While working on site, the Contractor must take special care to only modify the building structure as necessary, all holes bigger than a 4cm should be approved by the Post Safety and Health Officer.

h. Any unused wholes made in the building shall be patched and painted to match existing wall color; any modifications to the building will be properly patched and painted to match existing wall color so that modification looks original to building.

i. Contractor will be held liable for damages to building caused by failure to properly take care of the work space. Example damage to floors, walls, or other features caused by contractor.

j. Contractor shall be required to install equipment in a way that it will not be destroyed by the local weather conditions

k. Contractor shall be required to install all electrical equipment following guidelines set forth via electrician from Facilities.

4.2. DEFINING KEY TERMS

Distribution Room:
The room containing all the equipment required to broadcast the HD signal to the viewpoints.

Headend Equipment:
All the equipment within the distribution room required to broadcast HD signal to the viewpoints.

Master Point:
All the equipment within the eight fiber-optic, required to broadcast HD signal to the viewpoints.

View Points:
The wall port required to connect a television to the cable distribution system.

Receiving Point:
The equipment required to receive the signal from the satellite.

OSN Decoder:
The devices that receives the signal from the receiving point for the Orbit Showtime Network.

AFN Decoder:
The devices that receives the signal from the receiving point for the Armed Forces Network.

Warranty:
An obligation to replace any damaged item, the requirement to repair at no charge any items damaged within the period of warranty. The requirement to maintain the installed items to prevent damage from failure.

Preventative Maintenance:
The ability to come on a re-occurring basis generally pre-approved approved periods of monthly, bi-weekly, weekly, or daily. During these visits one would check all electrical equipment for potential shorts, would clean off all equipment of dust, and would ensure that all products are still properly grounded.

Emergency Maintenance:
To report within twenty four hours, seven days a week to repair any loss of service. Generally to include a whole block of TV's, any failure in the distribution room or as the Consulate directs.

Substandard:

Refers to the use of products which are knowingly poor quality to save money on the project.

Patch and Paint:

Refers to the act of filling in wholes in building infrastructure via Safety Officer approved medium and than matching the color of the wall paint over the patch to blend in the old wall with the new patch.

4.3. SURVEYING AND LABELING

Surveying:

The contractor will be allowed to perform site surveys, one must be used to create the proposal for this contract and another post awarding the contract shall be used to label the entire infrastructure and create a network diagram.

Labeling:

The following should be labeled in the infrastructure: coaxial lines with from and two definitions, the fiber-optic lines with from and two definitions, all equipment in the distribution room and receiving point with their frequencies and purpose, and finally all storage boxes must be labeled with their contents.

4.4. CLOSEOUT

1. At completion of work, the Contractor shall clean any impacted areas to a condition equal to original condition.

2. All shipping materials and construction debris are to be disposed of in a legal manner outside of the Compound.

3. Prior to Final Acceptance the Contractor shall submit to the Contracting Officer Representative marked up drawings (As-Built) reflect the work as installed. The drawings shall be digitally submitted on a CD-ROM in both AutoCAD and PDF format.

4. Prior to Final Acceptance the Contractor and Contracting Officer Representative will do a thorough walk through of the project to ensure that all View Points are HD and the quality matches that of the Head End equipment.

5. The contractor will be mandated to perform one year of warranty services. Warranty services as defined include replacing anything that breaks in the network with non-substandard products, installing any new view points throughout the compound, performing emergency-maintenance as required, and performing creating a preventative maintenance schedule to be submitted to the COR and agreed to by both contractor and CO via the COR.

5.0 RESPONSIBILITIES AND PROJECT MANAGEMENT

1. **COR.** A Contracting Officers Representative (COR) will be assigned to ensure quality assurance goals are met. The Contractor shall provide the COR access to the site at all times.

2. **Point of Contact.** The COR shall be the main point of contact for this Project. The Contractor shall report to the COR on (a) status of the Project, (b) changes in Schedule, (c) accidents and safety issues, (d) disruptions to elevator or utility services; and all other important information pertaining to the Project

3. **English Speaking Representative**. The Contractor shall provide an English-speaking representative on-site during all working hours with the authority to make all decisions on behalf of the Contractor and subcontractors.

4. **Management Personnel.** The Contractor shall staff the site, full-time, with a competent senior manager who shall perform project management. Remote project management is not an option. This individual shall keep a detailed photographic and written history of the project and shall update the Government weekly.

5. **Site Security.** The Contractor is responsible for on-site security as necessary to ensure no unauthorized access to their work sites. The Contractor is 100% responsible for securing their working materials and equipment. Any damage to facilities or infrastructure, which happens due to a lack of security, will be the responsibility of the Contractor to correct.

6. **Contractor's Temporary Work Center.** The Contractor will be permitted to use a designated area within the contract limits for operation of his construction equipment and office if warranted. If directed by the Contracting Officer, the Contractor shall not receive additional compensation to relocate his operations. The Contractor is responsible for obtaining any required additional mobilization area above that designated. On completion of the contract, all facilities shall be removed from the mobilization area within 5 days of final acceptance by the Contractor and shall be disposed of in accordance with applicable host government laws and regulations. The site shall be cleared of construction debris and other materials and the area restored to its original condition. The Contractor is responsible for maintaining this area in a clear orderly manner.

7. **Health and Safety.** The Contractor shall be solely responsible for risk assessments, managing health, and safety issues associated with this project. The Contractor must provide cold water to all workers at the job sites. Based on hazard assessments, Contractors shall provide or afford each affected employee personal protective equipment (PPE) that will protect the employee from hazards. At a minimum PPE shall consist of eye protection, hard hats, and closed toe shoes. If the workers arrive on-site with sandals or athletic shoes, the Contractor is expected to provide rubber boots to them or send them home. All construction workers and management personnel must wear hard hats at all times on the construction sites. Contractor provided rubber boots and rubber

gloves shall be worn when working around concrete placement. Other PPE such as gloves, dust masks, air respirators (sewage work) are also recommended. These items must be provided at the Contractor's expense. Workers may use discretion if they feel unsafe in using the equipment in a hostile environment. Any worker at an elevated location above 4 meters, with the exception of a portable ladder, must be provided and utilize a safety harness.

8. **Progress Payments.** If the contract awarder expects to receive more than one (1) progress payment, the Contractor must submit a broken out Cost Proposal with a Schedule of Values in order to properly calculate the percentage of contract completion.

Attachments:

TELEVES Ref 5806 - Twin Channel Standard Definition Modulator via AV Cable (20 Devices)

TELEVES Ref 2333 - RF to Fiber optic converter and transmitter (1 Device)

TELEVES Ref 2335 - Fiber optic to RF converter and transmitter (8 Devices)

TELEVES Ref 5338 - RF Amplifier with coaxial inputs (12 Devices)

CISCO D9865 - AFN Satellite Decoder (10 Devices)

OSN – Decoder (30 Devices)

uso HD
C25.37
31
uso HD
C24.7
1
9

Televes®

T.OX SERIES

EN TWIN Modulator

Ref. 5806

User manual

Televes

Index

1. Technical specifications 5
2. Reference description 7
3. Mounting 8
- **3.1.** Wall mounting 8
- **3.2.** 19” rack mounting 9

4. Element description 10
- **4.1.** Twin Modulator 10
- **4.2.** Power supply unit 11
- **4.3.** Amplifier 12
- **4.4.** Universal programmer 13

5. How to use the product 14
- **5.1.** Main menu 14
- **5.2.** Extended menu 17
- **5.3.** Parameters saving 18

6. Controlling the device 19
7. Typical application 20
8. Norms for rack mounting 21
9. Norms for cabinet mounting 23

A. Channels table 26

Televes

1. Technical specifications

1.1. TWIN Modulator ref. 5806

Video	Bandwidth	MHz	0,00005 ... 5	Differencial phase	°	< 4
	Input level (75 ohm)	Vpp	1	Chroma/luma Delay	ns	< 100
	Modulation depth	%	72,5 ... 90	Chroma/luma Delay	dB	> 52
	Differencial gain	%	< 4	Flatness	dB	< +1
Audio	Bandwidth	KHz	0,04 ... 15	S/N ratio	dB	> 45
	Impedance	ohm	10000	Flatness	dB	< ±1
	Pre-emphasis	µs	50	Input level	dBm	>-15 <7
	Deviation (1KHz/1.7Vpp input)		program. (see table)	Distortion (1KHz dev. ± 30KHz)	%	< 1
RF output	Output frequency	MHz	46 ... 862	Return losses	dB	10 (14 typ)
	Impedance	ohm	75	Audio carrier precision	KHz	VHF < 25 UHF < 50
	Output level	dBµV	80 ± 5			
	Regulation margin	dB	> 15	Video carrier stability	KHz	VHF < 15 UHF < 30
	Level stability	dB	± 3			
	Pa/Pv distance		-12, -16 (prog.)	Carrier ratio	MHz	4,5 / 5,5 / 6 / 6,5
	IF frequency	MHz	38,9	Band spurious level 46 ... 862MHz	dBc	55 min. > 60 typ
	Frequency steps	KHz	250 (prog.)			
	C/N (5MHz)	dB	> 56	Through losses (46 - 862 MHz)	dB	< 1.5
General	Power supply	V⎓	24	Protection index		IP20
	Consumption 24V	mA	300			

The technical characteristics described are defined for a maximum ambient temperature of 45°C (113ºF). Forced ventilation is used for higher temperatures.

EN

1.2. Technical specs. Broaband Amplifiers

Amplifier 5575	Frequency range	MHz	46 ... 862	Connector	type	“F”
	Gain	dB	44 ± 2,5	Powering voltage	Vdc	24
	Regulation margin	dB	20	Consumption at 24 Vdc	mA	450
	Output level (60 dB 42 CH CENELEC	dBµV	105	Test socket	dB	-30

1.3. Technical specs. Power Supply Unit

Power Supply Unit 5629	Mains voltage	Vac/Hz	196 - 264 / 50-60	Total current (max) (output 1 + output 2)	A	5 (24V⎓)
	Output voltage	Vdc	24	Max. current per output	A	4 (24V⎓)

1.4. TWIN Unit Blocks Diagram

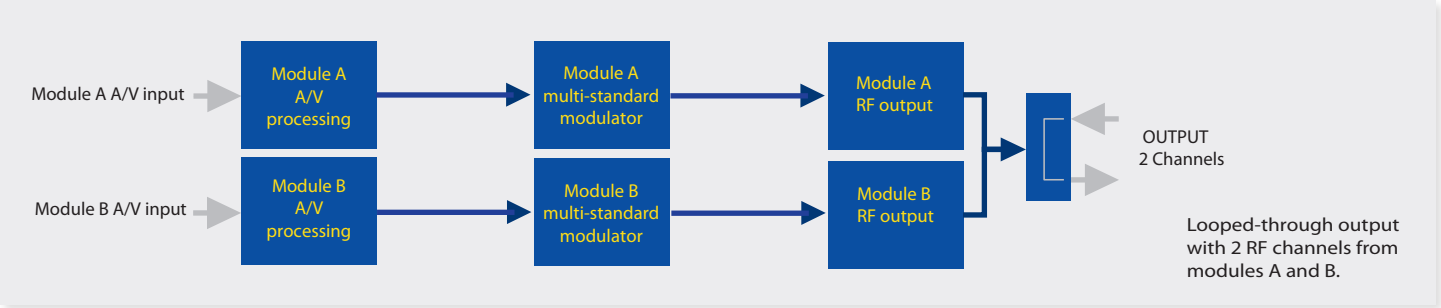

2. Description of references

Product Range	
5806	TWIN Modulator T-0X
5575	Broadband Amplifier 44dB 120dBµV T-0X
5559	Headend Manager CDC-IP T-0X
555901	Headend Manager CDC-IP GSM T-0X
5629	Power supply unit 24VDC/5A T-0X

Accessories	
7234	Universal Programmer
5071	T03-T05-T-0X Mounting rail (50 cm)
5239	T03-T05-T-0X Mounting rail.12 Modules+PSU (56 cm)
5301	19" Rack frame
507202	T-0X Lockable cabinet with Ventilation Unit (7 Modules + PSU)
4061	75 Ohm DC-Block load
4058	75 Ohm Load
422601	T05 to T-0X Power connection lead (40 cm)
422602	T05 to T-0X Management connection lead (40 cm)
422603	T-0X Management connection lead (1m)
5673	Blank plate 50 mm

3. Mounting

3.1. Wall mounting

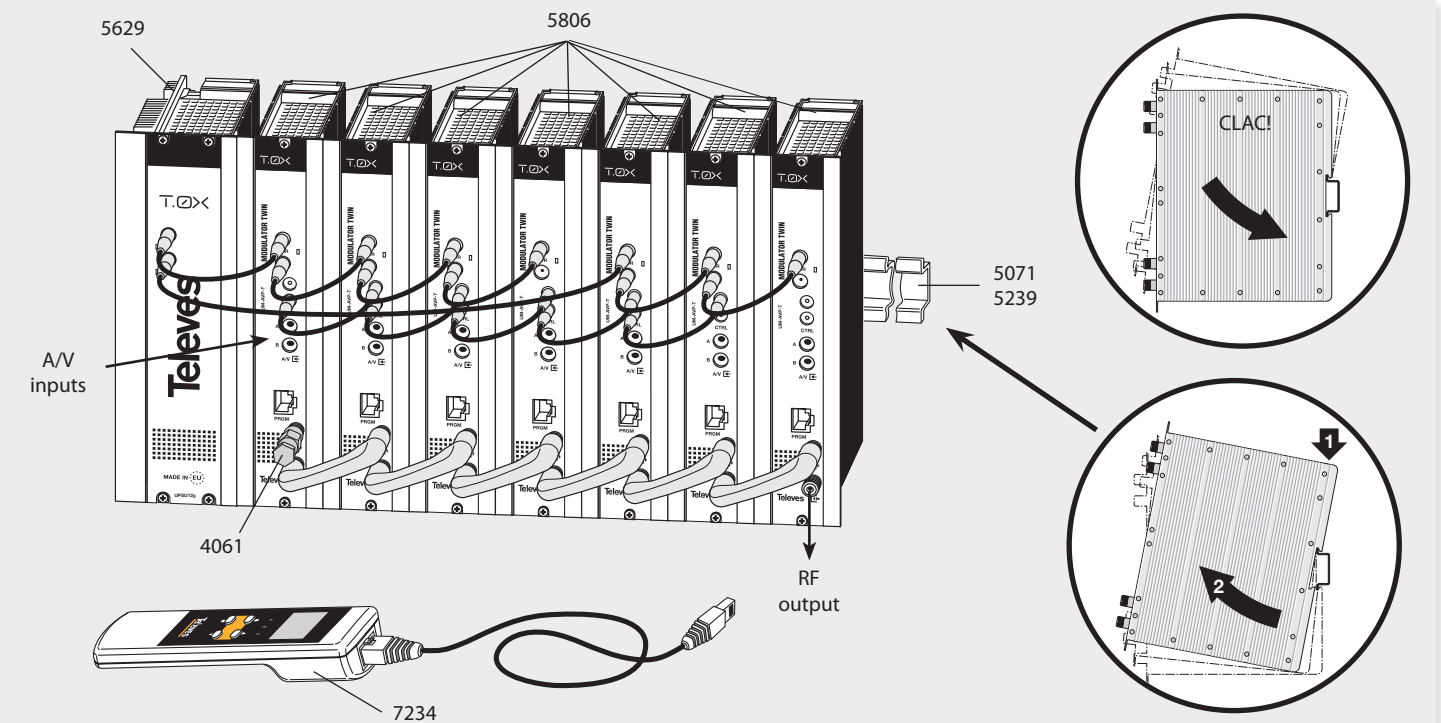

NOTE: The use of both PSU power outputs is recommended to balance the consumption. For example, 4+3 or 3+4

3.2. 19” rack frame mounting

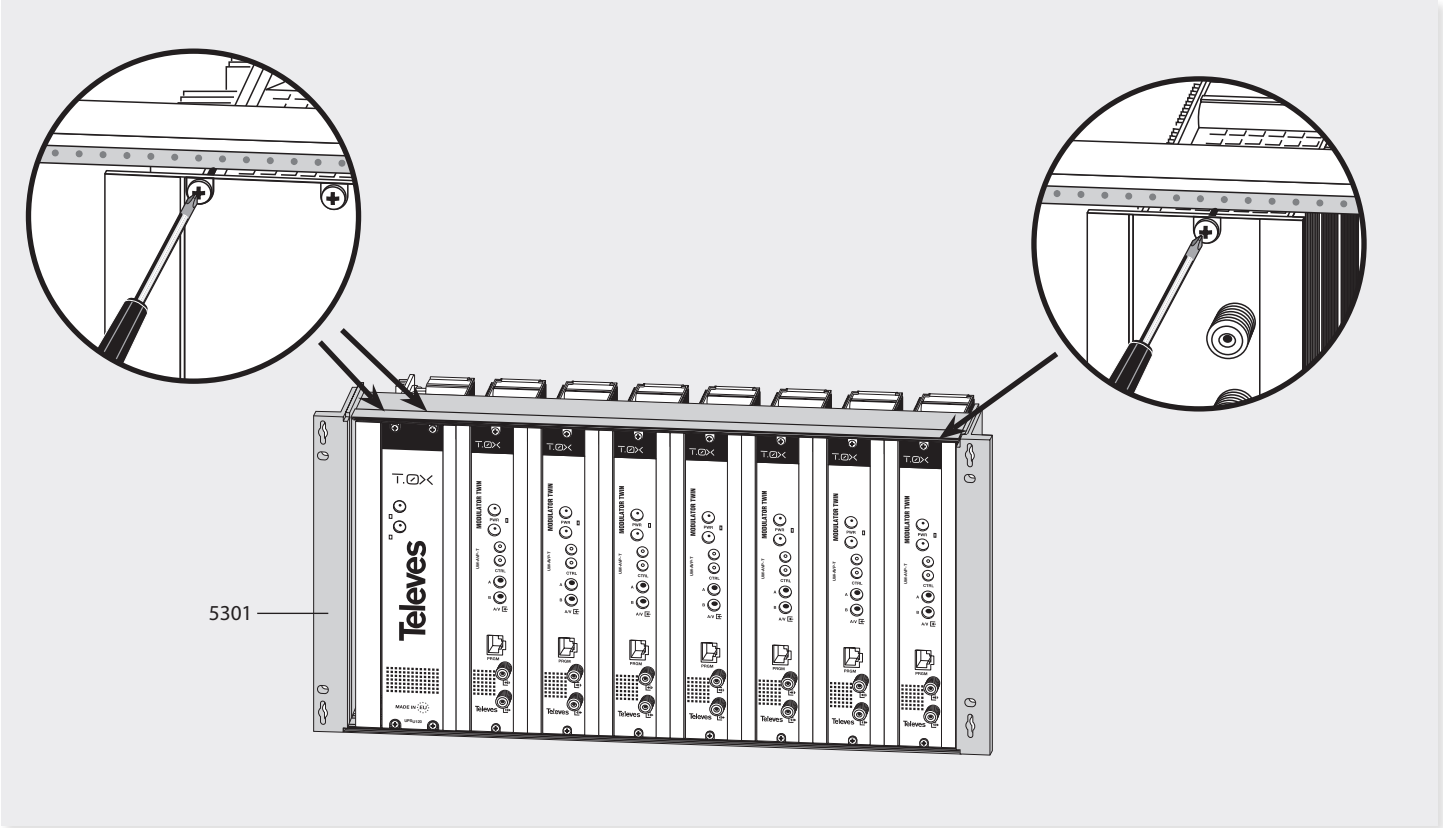

4. Identification of the system elements

4.1. Twin modulator

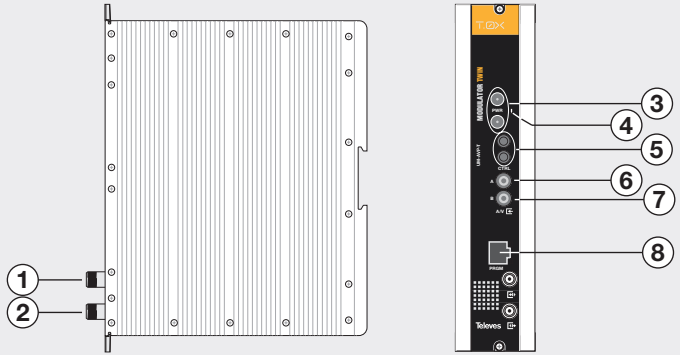

1. RF input
2. RF output + 2 CH (module A & module B)
3. Powering BUS connectors
4. Status LED
5. Control BUS connectors
6. Audio / video input signal connector (module A)
7. Audio / video input signal connector (module B)
8. Programmer / PC connector

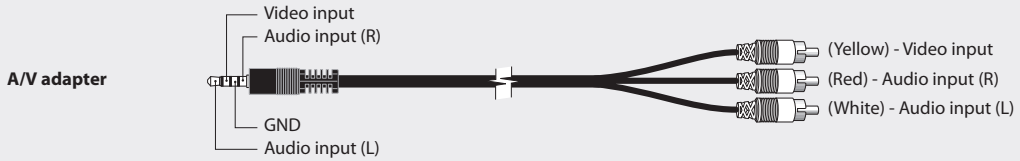

The TWIN unit features two A/V inputs (modules A and B) which generate two independent output channels.
The A/V inputs for each module (A and B) are modulated according to the TV standard in an IF of 38.9 MHz.
The modulated IF signal is converted to any channel or frequency between 46 and 862 MHz and then, once filtered, it is amplified to achieve the specified output level.

It is also possible to control the unit via a PC as is explained in section 6.

4.2. Power supply unit

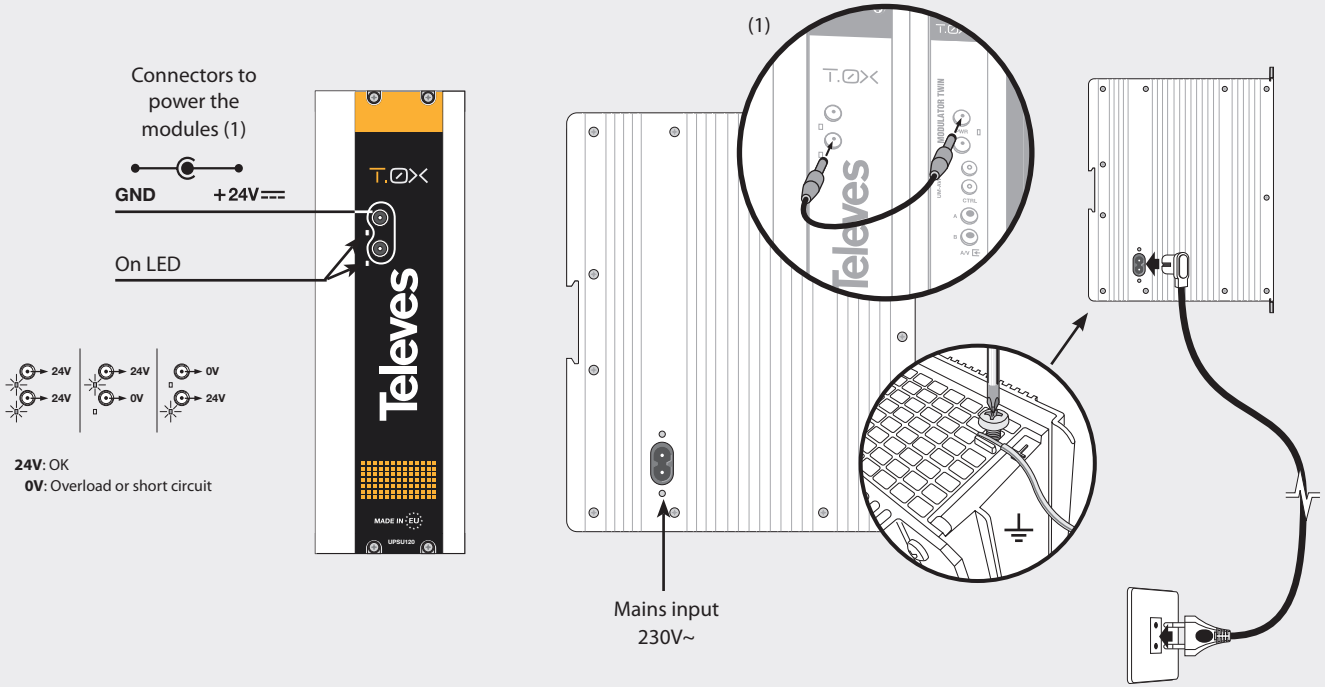

NOTES:
- The Power Supply Unit can power up to **16** Twin Modulator modules
- Whenever the demand of power exceeds 4A (max. current for each output), it is necessary to distribute it between the two powering outputs of the PSU.

4.3. Broadband amplifier

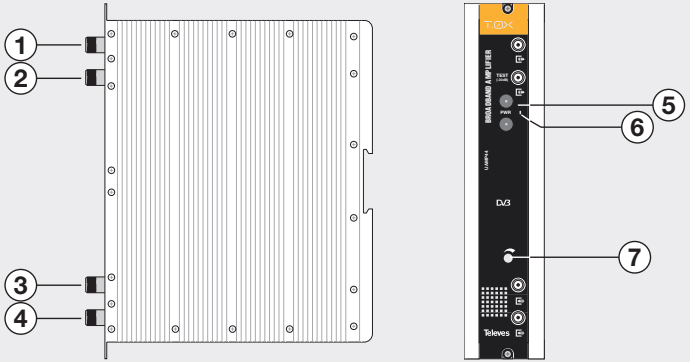

1. RF output
2. Test socket (-30dB)
3. RF input
4. RF input
5. Powering BUS connectors
6. Status LED
7. Gain attenuator

It features two signal input connectors, to allow the mixing of the channels provided by two systems. If only using one of the inputs, it is recommended to load the unused input with a load of 75 ohm, ref 4061.

Output connector and a test socket (-30 dB) are located in the upper part of the front panel.

The amplifier is powered with 24 Vdc by means fo a lead which is the same as that used to power the rest of the system's modules.

4.4. Universal Programmer PCT 5.0

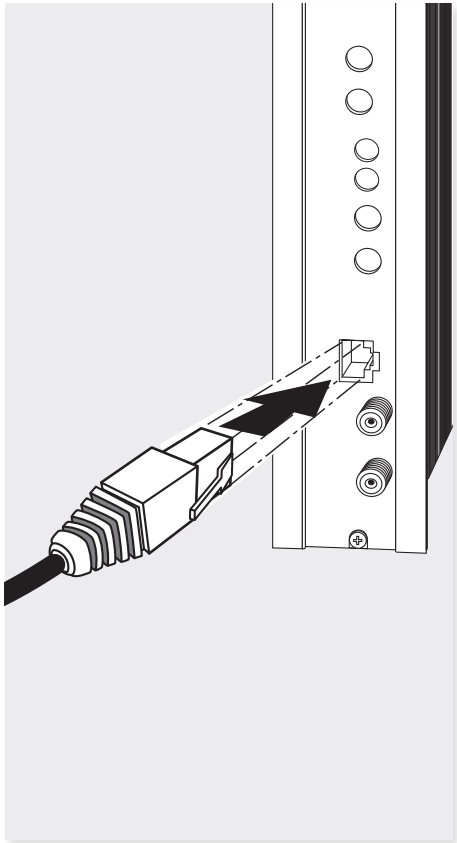

The programmer features 4 buttons:

- ● (short press) - Selection of parameter (positioning of the cursor).
- ▲-▼ Modification of the parameter chosen by the cursor (flashing)
- ■ (short press) - Change menu
- ● (long press) - Change between Principal and Extended menus
- ■ (long press) - Save changes to memory
- ■ + ● + ▲ Increases the contrast of the screen.
- ■ + ● + ▼ Decreases the contrast of the screen.

EN

5. - Instructions for use

The unit sends its configured parameters (frequencies/output channels, output levels, audio and video configuration, FW version,...) to the programmer when they are connected each other. Upon initiating the process, the SW version of the programmer will be displayed for a few seconds with the following screen:

```
PCT firmware
  version
------------
V: X.XX
```

Next, the programmer's display will show the loaded FW version for a few seconds:

```
Vers. FW.
Vx.xx
Vers. Boot
V:x.xx
```

After this, the main menu is displayed.

5.1. Main Menu

From here on, scroll down to see the different submenus by pressing the key ■ : Output Menu, Channel Table Menu, Video Menu, Audio Menu and Audio Mode Menu.

Note: *If you wish to change the menu language , the "Language" menu should be accessed before configuring the device. This is done by holding down the ● key in order to access the Extended menu, pressing the ■ key three times and then pressing ▲ or ▼ to select language. Finally, hold down the ■ key to record changes. For more information, see "Extended Menu => Select Language" section ".*

To switch between **A** and **B** modules of the TWIN unit, keep pressed the key ● until the A/B indication starts to flash in the upper left corner of the display.Then use keys ▲ and ▼ to select de desired module.

a. Output Menu

Allows to **select the module** to be configured and its **output channel**, both in channel mode and in frequency mode, and indicates the **output level**.
The way it is displayed will depend on how the module has been programmed since its last configuration (frequency mode or channel mode). If the device is in **channel mode**, then this menu displays the number and frequency of the output channel's video carrier (which varies upon changing the channel); it also displays digits (00-99) allowing control of the corresponding modulator's output level via the programmer. To select one of the modulators (A or B) of the TWIN unit, press the key ● once, then the A/B indication will flash. Next, use keys ▲ or ▼ to make the A or B selection.
To change the output channel of the chosen modulator, move through the menu by pressing the parameter selection key ● until the channel value starts to flash. Then use keys ▲ and ▼ to change it.

For example, if the selected channel is C21 of the CCIR UHF table:

```
A▶OUTPUT
Channel: C21
(471.25 MHz)
Level:    99
```

If the device is configured in **frequency mode,** the output menu will display the channel central frequency that is being programmed. For example:

```
A▶OUTPUT
Frequency:
474.00 MHz
Level:     99
```

The frequency value is programmed digit by digit, moving to the next digit by pressing ● (short press), and changing its value by pressing ▲ or ▼ . When the cursor is placed over the decimal part, only one of the next four values can be selected:

.00 MHz
.25 MHz
.50 MHz
.75 Mhz

Finally, by pressing the key ● once more, the digits to control the output level are selected. Use keys ▲ and ▼ to modified its value. Set 99 to obtain the max. oputput level. All the way down up to the value 00 the output level is 15 dB below its maximum.

b. Channel Tables Menu

Press the ■ key to gain access to the second menu allowing channel table selection that will be used for programming the output channels from the previous menu. Frequency mode selection is also allowed. The 9 possible tables are: *CCIR N.Z. Ind, China Taiwan, Chile M/N, Italy, France, Russia (OIR), Ireland, South Africa, Poland and Australia.*
Select one of the modulators (A or B) of the TWIN unit: first, press the key ● once, and second, use keys ▲ and ▼ to select A or B. Next, by pressing the key ● again, the name of the channels table will flash, and then can be modified with ▲ or ▼ keys.

```
A▶CHANNELS
Channel Tab:
CCIR N.Z.Ind
```

c. Video Menu

Pressing ■ accesses the following menu. In this menu it is possible to configure the **video parameters** and the TV standard (depending on the audio carrier distance relative to that of the video and modulation). Video modulation depth (**VMD**) and audio carrier frequency (**FAud**) values can be modified.

```
A▶VIDEO
VMD: 68.5%
FAud: 5.5MHz
```

Initially, a short press on the parameter selection key ● gives access to the A/B modulator selection menu; then use keys ▲ and ▼ to select A or B.
By a short press on the parameter selection key ●, the video modulation (VMD) sub-menu is accessed. Keys ▲ or ▼ allow modification of the video level, whose range of allowed values are indicated below (they are modulation depth values provided that the video signal input level is 1 Vpp). If the modulator is programmed in L norm, the allowed values are: 87%, 89.5%, 91.0% and 93.0%. For any other standard, these values are: 68.5%, 72.0%, 75.5%, 77.0%, 79.0%, 80.0%, 81.0% and 82.5%.
Short pressing the parameter selection key ● accesses the audio carrier carrier frequency selection sub-menu (FAud) (norm or standard). To modify the norm or standard, press ▲ or ▼ un t i l the desired value appears, amongst the following:

FAud:	Ac/Vc relative frequency (MHz)
4.5 MHz	4.5 MHz, Standard M/N
5.5 MHz	5.5 MHz, Standard B/G
6.0 MHz	6.0 MHz, Standard I
6.5 MHz	6.5 MHz, Standard D/K
NORM L	6.5 MHz, L Norm

EN

d. Audio Menu

Pressing ■ accesses the next menu. In this menu, it is possible to configure the modulation **audio parameters**, audio deviation, audio carrier frequency relative to that of the video and audio sub-carrier frequency (5.74 MHz) relative to that of video (*).

(*) Only in the case where the main audio carrier is at 5.5MHz.

```
A▶AUDIO
S. Dev.:   7
PictS 1: -16
PictS 2: -18
```

Initially, a short press on the parameter selection key ● gives access to the A/B modulator selection menu; then use keys ▲ and ▼ to select A or B.
A short press on the parameter selection key ● gives access the audio deviation sub-menu (AudDev). Modify the audio deviation value between 0 to 13, by using keys ▲ or ▼. Values shown in the next table indicate the audio level necessary at the input (for an input signal of 1 KHz) in order to obtain a modulation deviation value of 50 KHz in Dual mode. In other words, if the input signal is 1.7 Vpp at 1 KHz (0 dBm in the audio analyser), we need to program the AudDev menu of the programmer with a value of **6**.

S. Dev.:	Input level audio (dBm)
0	6
1	5
2	4
3	3
4	2
5	1
6	**0**
7	-1
8	-2
9	-3
10	-4
11	-5
12	-6
13	-7

For an input audio level of 1Vpp for a 1KHz signal (-7,5dBm in the audio analyser), the modulation deviation will depend on the AudDev value programmed as indicated in the following table:

S. Dev.:	Modulation Deviation KHz
0	±11.5
1	±13
2	±14
3	±15
4	±17
5	±19
6	±22
7	±25
8	±28
9	±31
10	±34
11	±37.5
12	±40
13	±45

If the modulator programmer is in L Norm, these values indicate the modulation depth: m=100* [(Emax-Emin)/(Emax+Emin)] provided that the input level is 1 Vpp for a 1 KHz signal.

S. Dev.:	L Norm (1Vpp)
0	20%
1	22%
2	24%
3	26%
4	29%
5	32.6%
6	36.7%
7	39.5%
8	45.8%
9	49%
10	54%
11	60%
12	68.5%
13	77%

Short pressing the parameter selection key again ● accesses the selection sub-menu for audio carrier level relative to that of the video (RelPort) which can be changed by pressing ▲ and ▼.

The allowed values for the main audio carrier level relative to that of the video are: **-12dB** and **-16dB**.
After pressing the parameter selection key ● (short press) the following sub-menu allows to change the audio sub-carrier level (5.74MHz) relative to that of the video (RelSubC).
The range of values that are allowed for selection are: **-18dB**, **-20dB**, **-22dB**, **-24dB**.

e. Mode Menu

Pressing ■ accesses the next menu. In this menu, it is possible to configure the modulation output mode, audio mode(*) and test pattern mode parameters.

(*) Only in the case where the main audio carrier is at 5.5MHz.

```
A▶MODE
Audio Mode:
Mono
TestMode OFF
```

Initially pressing the parameter selection key (short press) ● allows selection of a desired modulator; then, press ▲ or ▼ to change the modulator that will be configured.
Short pressing the parameter selection key ● accesses the function mode menu (Audio Mode).
Pressing ▲ and ▼ selects between stereo, dual or mono (for separation between 5.5 MHz carriers).
Short pressing the parameter selection key ● accesses the function mode sub-menu (TestMode).
Using keys ▲ and ▼ selects between activated (**ON**) and deactivated (**OFF**).
In function mode with test pattern deactivated, the output signal is modulated with external audio and video (A/V in). This will be normal functioning mode.
In function mode with test pattern, the output signal consists of an internally generated test signal that shows two vertical bars on a black background, and an audio tone.

5.2. Extended Menu

To access extended menus, hold down the ● key for more than three seconds. Menu selection, as well as modification of selected values and saving changes, are made in the same manner as in the main menu.
Once in extended mode, you can move through each menu by short pressing ■.

EN

a. Configuration Menu

Allows selection of the unit's address for communicating with the Header Control.

```
▶CONFIG
Adr CDC: 001
```

The unit's address is programmed number by number, moving to the next digit by pressing ● (short), and modifying its value by pressing ▲ or ▼. The allowed values are between 1 and 254 (0 and 255 values being reserved for other purposes).

b. Temperature Menu

The following menu provides an indication of the unit's **current temperature** as well as the maximum recorded. The maximum can be reset by pressing the key ●.

```
▶TEMPERATURE
Now:    03
Max:    04
     ● reset
```

The recommended operating margins are as follows:

- Optimum operation : **0-6**
- High temperature: **7-8**
- Excessive temperature: **9-10**

If the maximum recorded is outside the optimal range the installation should be adjusted to try to lower the temperature.

c. Version Menu

Pressing ■ accesses the following menu.
This menu displays information about the current FW version of the the unit (microprocessor, boot).

```
Vers. FW.
Vx.xx
Vers. Boot
V:x.xx
```

d. Language Menu

Pressing the ■ key accesses the next extending menu. This menu allows selection, between Spanish, English and German of the language in which to display the LCD screen text.
The language is changed directly using the keys ▲ and ▼.

```
▶LANGUAGE

   English
```

5.3. Parameters Saving

Once a parameter is modified to the desired value in any menu (normal or extended), to save the settings press ■ for three seconds. The display will show the following indication:

```
Saving
settings and
restarting
...
```

Please, do not unplug the programmer until this indication disappears. Then the Output Menu will be displayed with the video frequency (or channel number) of the output channel.
If the configuration paremeters are modified but not saved, the previous configuration is retrieved after 30 sec. in other words, the changes are discarded.

6. - Controlling the Device

This version of the Twin Modulator allows configuration and monitoring via a PC, both locally and remotely.

a. Local control

The "Headend Management" programme (v2.14 or higher) is required, as well as a special cable (provided with the programme) that connects a PC serial port to the Twin Modulator "PRGM" socket. The programme can be used to set up and read all the operating parameters of the device.

b. Remote control

It is necessary to have a Headend Control module (ref. 5559 or 555901) that includes the programme mentioned above, and the corresponding modem connected to a phone line.

Once the communication with the headend control has been established, all the controllable devices that have been installed in the headend can be accessed. In this case it is essential that each element be programmed with a different device address between 1 and 254.

Menu structure

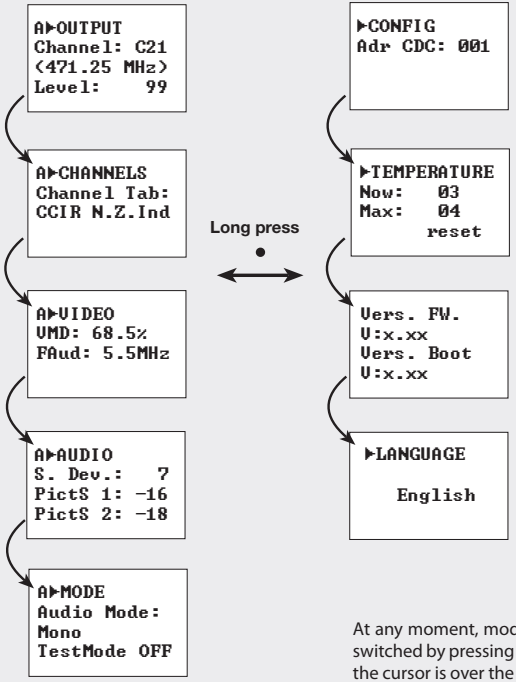

At any moment, modules A and B can be switched by pressing keys ▲ and ▼ when the cursor is over the A/B indication situated on the upper left corner.

7. Application example

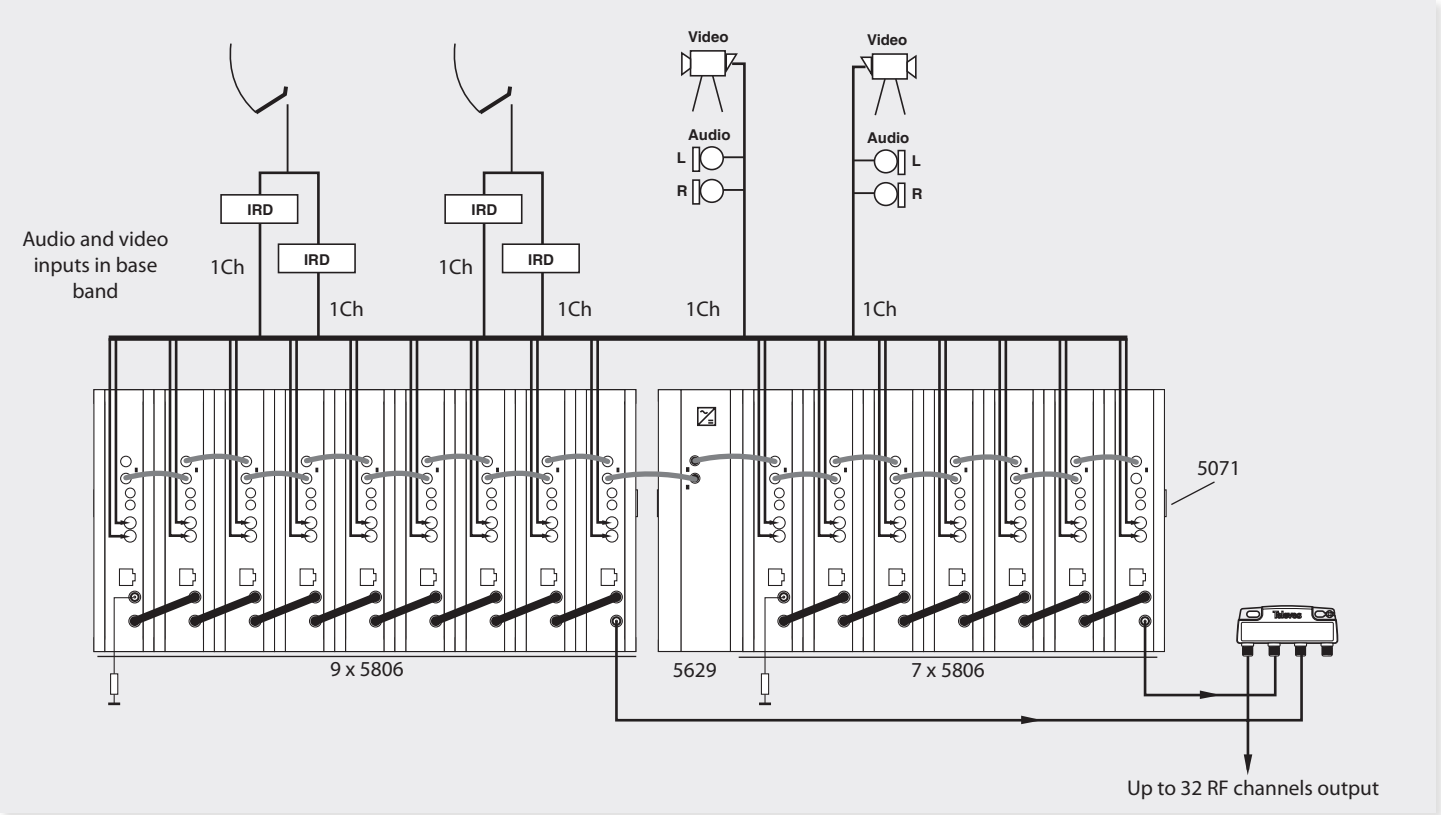

8. Norms for rack mounting (max. 49 TWIN MODULATOR - 7 subracks with 5 units in height - 8,7”)

8.1. Installation of the rack with ventilation facilities

To facilitate the renewal and circulation of the air inside the rack, to reduce the temperature of the units and thus improving their characteristics, it is advisable to place 2 ventilation units of 25W, particularly when the rack with the Twin Modulator is located in warm places, with temperatures higher than 45°C.

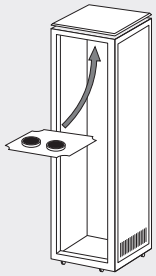

fig. 1

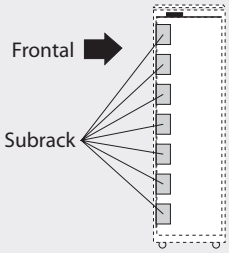

fig. 2

These ventilators will be installed on a tray that is fixed inside the cabinet (fig. 1 & 2). This way, the ventilators will force the fresh air entering from the base of the cabinet, to circulate between the modules and be expelled through a gap on top of the cabinet (3-5 cm approx.). See fig. 3.

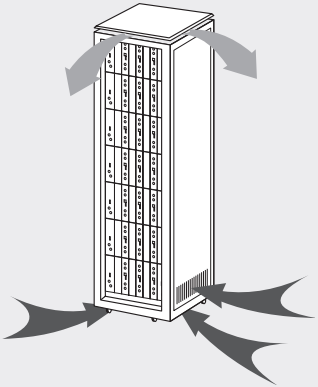

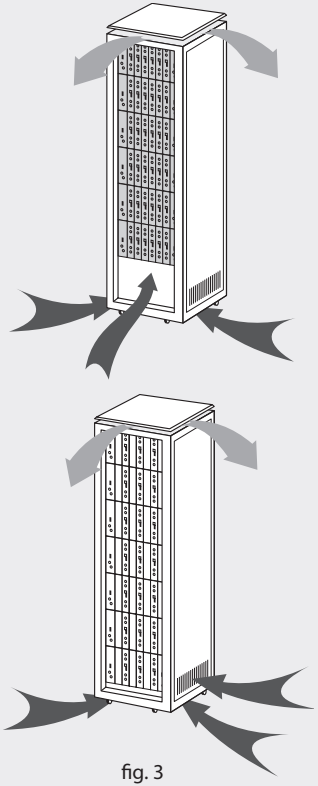

fig. 3

EN

It is very important that this process operates correctly, therefore the following must be observed:

- Do not open the side doors, as this would cause the ventilators to extract the air from the outside rather than the air inside of the rack.

- Do not place objects close to the rack that may block the entry and exit openings for the air.

- If the rack is not complete, the subracks must be placed from the top downwards without leaving any gaps in between, fig. 4.

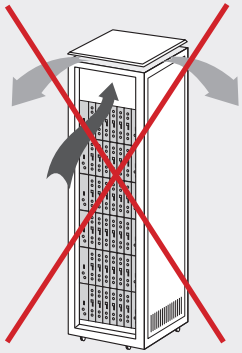

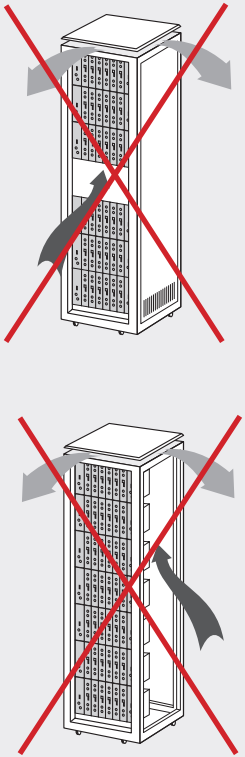

fig. 4

8.2. Installation of the rack without ventilation facilities

To install the units in racks without installation facilities, and when the rack is located in a place with a temperature of around 45°C, it is advisable to place the rack completely open, in other words, do not use the side doors. This is to facilitate the ventilation of the units , fig. 5.

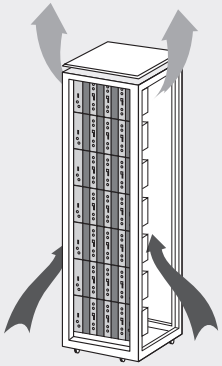

fig. 5

9. Norms for cabinet mounting

IMPORTANT

The scheme of recommended ventilation is the one in the figure in any case of cabinet placement (horizontal or vertical).

The maximum temperature permitted surrounding the highest cabinet is 45ºC in both ways of placement, horizontal or vertical way.

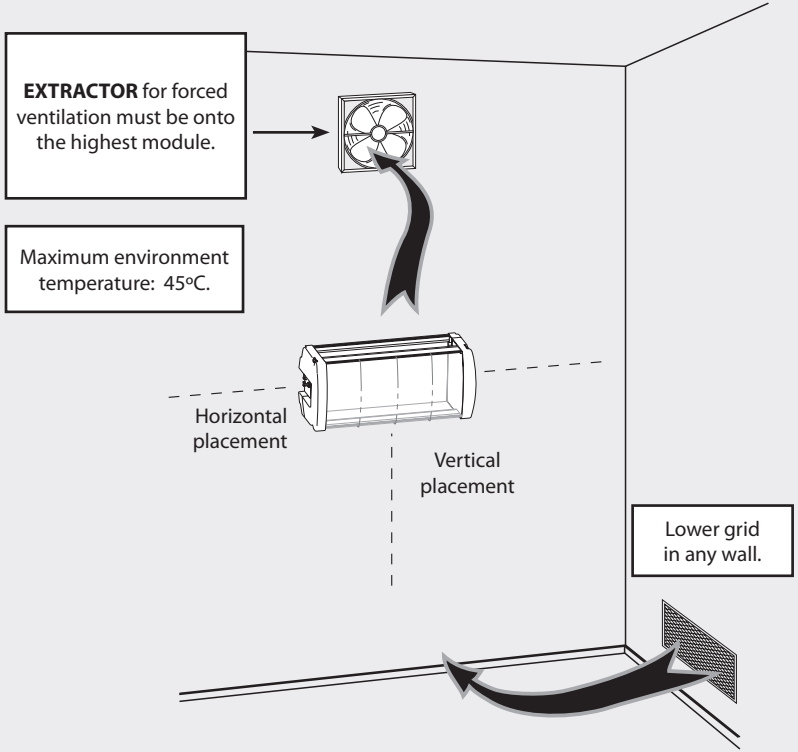

IMPORTANT

Horizontal placement of the cabinets is strongly recommended, placing them as near to the floor as possible.

If the horizontal placement is impossible, then vertical placement is allowed.

Respect the recommended minimum distances in the attached schemes.

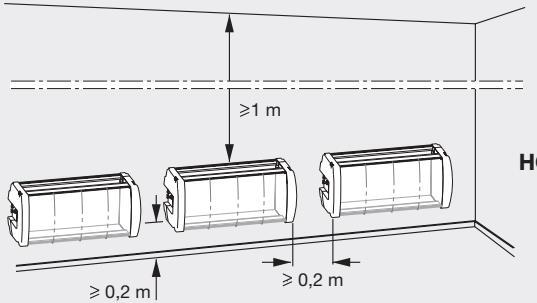

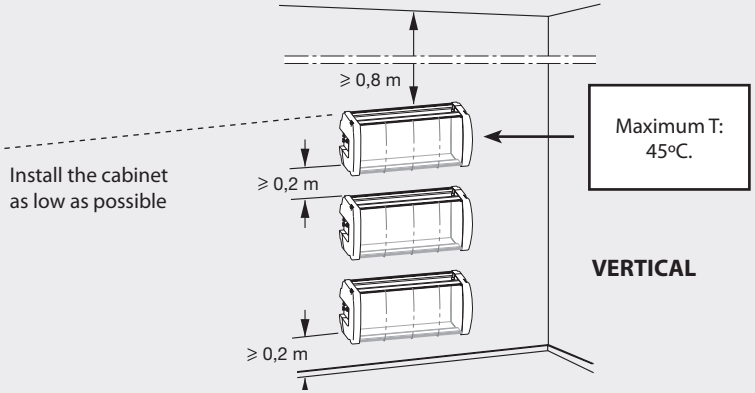

EN

A. Channels table

Tabl. 1		Tabl. 2		Tabl. 3		Tabl. 4		Tabl. 5		Tabl. 6		Tabl. 7		Tabl. 8		Tabl. 9		Tabl. 10	
CCIR		China/Taiwan		Chile		Italy		France		OIR channels		Ireland		South Africa		Poland (OIR)		Australia	
C02	48,25	1	49,75	1	55,25	A	53,75	F01	47,75	R01	49,75	1	45,75	2	53,75	S01	111,25	0	46,25
C03	55,25	2	57,75	2	61,25	B	62,25	L02	55,75	R02	59,25	2	53,75	3	61,75	S02	119,25	1	57,25
C04	62,25	3	65,75	3	67,25	C	82,25	L03	60,5	R03	77,25	3	61,75	4	175,25	S03	127,25	2	64,25
L01	69,25	4	77,25	4	77,25	S01	105,25	L04	63,75	R04	85,25	5	175,25	5	183,25	S04	135,25	3	86,25
L02	76,25	5	85,25	5	83,25	S02	112,25	S01	105,25	R05	93,25	6	183,25	6	191,25	S05	143,25	4	95,25
L03	83,25	6	168,25	6	175,25	S03	119,25	S02	112,25	S01	111,25	7	191,25	7	199,25	S06	151,25	5	102,25
S01	105,25	7	176,25	7	181,25	S04	126,25	S03	119,25	S02	119,25	8	199,25	8	207,25	S07	159,25	S02	112,25
S02	112,25	8	184,25	8	187,25	S05	133,25	S04	126,25	S03	127,25	9	207,25	9	215,25	S08	167,25	S03	119,25
S03	119,25	9	192,25	9	193,25	S06	140,25	S05	133,25	S04	135,25	10	215,25	10	223,25	K06	175,25	S04	126,25
S04	126,25	10	200,25	10	199,25	S07	147,25	S06	140,25	S05	143,25	11	223,25	11	231,25	K07	183,25	S05	133,25
S05	133,25	11	208,25	11	205,25	S08	154,25	S07	147,25	S06	151,25	C21	471,25	12	239,25	K08	191,25	5A	138,25
S06	140,25	12	216,25	12	211,25	S09	161,25	S08	154,25	S07	159,25	C22	479,25	13	247,43	K09	199,25	S06	140,25
S07	147,25	C21	471,25	21	471,25	S10	168,25	S09	161,25	S08	167,25	C23	487,25	C21	471,25	K10	207,25	S07	147,25
S08	154,25	C22	479,25	22	477,25	D	175,25	S10	168,25	R06	175,25	C24	495,25	C22	479,25	K11	215,25	S08	154,25
S09	161,25	C23	487,25	23	483,25	E	183,75	L05	176	R07	183,25	C25	503,25	C23	487,25	K12	223,25	S09	161,25
S10	168,25	C24	495,25	24	489,25	F	192,25	L06	184	R08	191,25	C26	511,25	C24	495,25	S09	231,25	S10	168,25
C05	175,25	C25	503,25	25	495,25	G	201,25	L07	192	R09	199,25	C27	519,25	C25	503,25	S10	239,25	6	175,25
C06	182,25	C26	511,25	26	501,25	H	210,25	L08	200	R10	207,25	C28	527,25	C26	511,25	S11	247,25	7	182,25
C07	189,25	C27	519,25	27	507,25	H1	217,25	L09	208	R11	215,25	C29	535,25	C27	519,25	S12	255,25	8	189,25
C08	196,25	C28	527,25	28	513,25	H2	224,25	L10	216	R12	223,25	C30	543,25	C28	527,25	S13	263,25	9	196,25
C09	203,25	C29	535,25	29	519,25	S11	231,25	S11	231,25	S11	231,25	C31	551,25	C29	535,25	S14	271,25	9A	203,25
C10	210,25	C30	543,25	30	525,25	S12	238,25	S12	238,25	S12	239,25	C32	559,25	C30	543,25	S15	279,25	10-o	209,25
C11	217,25	C31	551,25	31	531,25	S13	245,25	S13	245,25	S13	247,25	C33	567,25	C31	551,25	S16	287,25	10	210,25
C12	224,25	C32	559,25	32	537,25	S14	252,25	S14	252,25	S14	255,25	C34	575,25	C32	559,25	S17	295,25	11-o	216,25
S11	231,25	C33	567,25	33	543,25	S15	259,25	S15	259,25	S15	263,25	C35	583,25	C33	567,25	S18	303,25	11	217,25
S12	238,25	C34	575,25	34	549,25	S16	266,25	S16	266,25	S16	271,25	C36	591,25	C34	575,25	S19	311,25	12	224,25
S13	245,25	C35	583,25	35	555,25	S17	273,25	S17	273,25	S17	279,25	C37	599,25	C35	583,25	S20	319,25	S11	231,25
S14	252,25	C36	591,25	36	561,25	S18	280,25	S18	280,25	S18	287,25	C38	607,25	C36	591,25	S21	327,25	S12	238,25
S15	259,25	C37	599,25	37	567,25	S19	287,25	S19	287,25	S19	295,25	C39	615,25	C37	599,25	S22	335,25	S13	245,25
S16	266,25	C38	607,25	38	573,25	S20	294,25	S20	294,25	S20	303,25	C40	623,25	C38	607,25	S23	343,25	S14	252,25
S17	273,25	C39	615,25	39	579,25	S21	303,25	S21	303,25	S21	311,25	C41	631,25	C39	615,25	S24	351,25	S15	259,25
S18	280,25	C40	623,25	40	585,25	S22	311,25	S22	311,25	S22	319,25	C42	639,25	C40	623,25	S25	359,25	S16	266,25
S19	287,25	C41	631,25	41	591,25	S23	319,25	S23	319,25	S23	327,25	C43	647,25	C41	631,25	S26	367,25	S17	273,25
S20	294,25	C42	639,25	42	597,25	S24	327,25	S24	327,25	S24	335,25	C44	655,25	C42	639,25	S27	375,25	S18	280,25
S21	303,25	C43	647,25	43	603,25	S25	335,25	S25	335,25	S25	343,25	C45	663,25	C43	647,25	S28	383,25	S19	287,25

EN

S22	311,25	C44	655,25	44	609,25	S26	343,25	S26	343,25	S26	351,25	C46	671,25	C44	655,25	S29	391,25	S20	294,25
S23	319,25	C45	663,25	45	615,25	S27	351,25	S27	351,25	S27	359,25	C47	679,25	C45	663,25	S30	399,25	S21	303,25
S24	327,25	C46	671,25	46	621,25	S28	359,25	S28	359,25	S28	367,25	C48	687,25	C46	671,25	S31	407,25	S22	310,25
S25	335,25	C47	679,25	47	627,25	S29	367,25	S29	367,25	S29	375,25	C49	695,25	C47	679,25	S32	415,25	S23	317,25
S26	343,25	C48	687,25	48	633,25	S30	375,25	S30	375,25	S30	383,25	C50	703,25	C48	687,25	S33	423,25	S24	324,25
S27	351,25	C49	695,25	49	639,25	S31	383,25	S31	383,25	S31	391,25	C51	711,25	C49	695,25	S34	431,25	S25	331,25
S28	359,25	C50	703,25	50	645,25	S32	391,25	S32	391,25	S32	399,25	C52	719,25	C50	703,25	S35	439,25	S26	338,25
S29	367,25	C51	711,25	51	651,25	S33	399,25	S33	399,25	S33	407,25	C53	727,25	C51	711,25	S36	447,25	S27	345,25
S30	375,25	C52	719,25	52	657,25	S34	407,25	S34	407,25	S34	415,25	C54	735,25	C52	719,25	S37	455,25	S28	352,25
S31	383,25	C53	727,25	53	663,25	S35	415,25	S35	415,25	S35	423,25	C55	743,25	C53	727,25	S38	463,25	S29	359,25
S32	391,25	C54	735,25	54	669,25	S36	423,25	S36	423,25	S36	431,25	C56	751,25	C54	735,25	C21	471,25	S30	366,25
S33	399,25	C55	743,25	55	675,25	S37	431,25	S37	431,25	S37	439,25	C57	759,25	C55	743,25	C22	479,25	S31	373,25
S34	407,25	C56	751,25	56	681,25	S38	439,25	S38	439,25	S38	447,25	C58	767,25	C56	751,25	C23	487,25	S32	380,25
S35	415,25	C57	759,25	57	687,25	S39	447,25	S39	447,25	S39	455,25	C59	775,25	C57	759,25	C24	495,25	S33	387,25
S36	423,25	C58	767,25	58	693,25	S40	455,25	S40	455,25	S40	463,25	C60	783,25	C58	767,25	C25	503,25	S34	394,25
S37	431,25	C59	775,25	59	699,25	S41	463,25	S41	463,25	C21	471,25	C61	791,25	C59	775,25	C26	511,25	S35	401,25
S38	439,25	C60	783,25	60	705,25	C21	471,25	C21	471,25	C22	479,25	C62	799,25	C60	783,25	C27	519,25	S36	408,25
S39	447,25	C61	791,25	61	711,25	C22	479,25	C22	479,25	C23	487,25	C63	807,25	C61	791,25	C28	527,25	S37	415,25
S40	455,25	C62	799,25	62	717,25	C23	487,25	C23	487,25	C24	495,25	C64	815,25	C62	799,25	C29	535,25	S38	422,25
S41	463,25	C63	807,25	63	723,25	C24	495,25	C24	495,25	C25	503,25	C65	823,25	C63	807,25	C30	543,25	S39	429,25
C21	471,25	C64	815,25	64	729,25	C25	503,25	C25	503,25	C26	511,25	C66	831,25	C64	815,25	C31	551,25	S40	436,25
C22	479,25	C65	823,25	65	735,25	C26	511,25	C26	511,25	C27	519,25	C67	839,25	C65	823,25	C32	559,25	S41	443,25
C23	487,25	C66	831,25	66	741,25	C27	519,25	C27	519,25	C28	527,25	C68	847,25	C66	831,25	C33	567,25	S42	450,25
C24	495,25	C67	839,25	67	747,25	C28	527,25	C28	527,25	C29	535,25	C69	855,25	C67	839,25	C34	575,25	S43	457,25
C25	503,25	C68	847,25	68	753,25	C29	535,25	C29	535,25	C30	543,25			C68	847,25	C35	583,25	S44	464,25
C26	511,25	C69	855,25	69	759,25	C30	543,25	C30	543,25	C31	551,25			C69	855,25	C36	591,25	S45	471,25
C27	519,25			70	765,25	C31	551,25	C31	551,25	C32	559,25					C37	599,25	H21	478,25
C28	527,25			71	771,25	C32	559,25	C32	559,25	C33	567,25					C38	607,25	H22	485,25
C29	535,25			72	777,25	C33	567,25	C33	567,25	C34	575,25					C39	615,25	H23	492,25
C30	543,25			73	783,25	C34	575,25	C34	575,25	C35	583,25					C40	623,25	H24	499,25
C31	551,25			74	789,25	C35	583,25	C35	583,25	C36	591,25					C41	631,25	H25	506,25
C32	559,25			75	795,25	C36	591,25	C36	591,25	C37	599,25					C42	639,25	H26	513,25
C33	567,25			76	801,25	C37	599,25	C37	599,25	C38	607,25					C43	647,25	H27	520,25
C34	575,25			77	807,25	C38	607,25	C38	607,25	C39	615,25					C44	655,25	H28	527,25
C35	583,25			78	813,25	C39	615,25	C39	615,25	C40	623,25					C45	663,25	H29	534,25
C36	591,25			79	819,25	C40	623,25	C40	623,25	C41	631,25					C46	671,25	H30	541,25
C37	599,25			80	825,25	C41	631,25	C41	631,25	C42	639,25					C47	679,25	H31	548,25
C38	607,25			81	831,25	C42	639,25	C42	639,25	C43	647,25					C48	687,25	H32	555,25
C39	615,25			82	837,25	C43	647,25	C43	647,25	C44	655,25					C49	695,25	H33	562,25
C40	623,25			83	843,25	C44	655,25	C44	655,25	C45	663,25					C50	703,25	H34	569,25
C41	631,25			84	849,25	C45	663,25	C45	663,25	C46	671,25					C51	711,25	H35	576,25

C42	639,25			85	855,25	C46	671,25	C46	671,25	C47	679,25					C52	719,25	H36	583,25
C43	647,25			86	861,25	C47	679,25	C47	679,25	C48	687,25					C53	727,25	H37	590,25
C44	655,25					C48	687,25	C48	687,25	C49	695,25					C54	735,25	H38	597,25
C45	663,25					C49	695,25	C49	695,25	C50	703,25					C55	743,25	H39	604,25
C46	671,25					C50	703,25	C50	703,25	C51	711,25					C56	751,25	H40	611,25
C47	679,25					C51	711,25	C51	711,25	C52	719,25					C57	759,25	H41	618,25
C48	687,25					C52	719,25	C52	719,25	C53	727,25					C58	767,25	H42	625,25
C49	695,25					C53	727,25	C53	727,25	C54	735,25					C59	775,25	H43	632,25
C50	703,25					C54	735,25	C54	735,25	C55	743,25					C60	783,25	H44	639,25
C51	711,25					C55	743,25	C55	743,25	C56	751,25					C61	791,25	H45	646,25
C52	719,25					C56	751,25	C56	751,25	C57	759,25					C62	799,25	H46	653,25
C53	727,25					C57	759,25	C57	759,25	C58	767,25					C63	807,25	H47	660,25
C54	735,25					C58	767,25	C58	767,25	C59	775,25					C64	815,25	H48	667,25
C55	743,25					C59	775,25	C59	775,25	C60	783,25					C65	823,25	H49	674,25
C56	751,25					C60	783,25	C60	783,25	C61	791,25					C66	831,25	H50	681,25
C57	759,25					C61	791,25	C61	791,25	C62	799,25					C67	839,25	H51	688,25
C58	767,25					C62	799,25	C62	799,25	C63	807,25					C68	847,25	H52	695,25
C59	775,25					C63	807,25	C63	807,25	C64	815,25					C69	855,25	H53	702,25
C60	783,25					C64	815,25	C64	815,25	C65	823,25							H54	709,25
C61	791,25					C65	823,25	C65	823,25	C66	831,25							H55	716,25
C62	799,25					C66	831,25	C66	831,25	C67	839,25							H56	723,25
C63	807,25					C67	839,25	C67	839,25	C68	847,25							H57	730,25
C64	815,25					C68	847,25	C68	847,25	C69	855,25							H58	737,25
C65	823,25					C69	855,25	C69	855,25									H59	744,25
C66	831,25																	H60	751,25
C67	839,25																	H61	758,25
C68	847,25																	H62	765,25
C69	855,25																	H63	772,25
																		H64	779,25
																		H65	786,25
																		H66	793,25
																		H67	800,25
																		H68	807,25
																		H69	814,25
																		H70	821,25
																		H71	828,25
																		H72	835,25
																		H73	842,25
																		H74	849,25
																		H75	856,25

Guarantee

Televés S.A. offers a two year guarantee, beginning from the date of purchase for countries in the EU. For countries that are not part of the EU, the legal guarantee that is in force at the time of purchase is applied. Keep the purchase invoice to determine this date.

During the guarantee period, Televés S.A. complies with the guarantee by repairing or substituting the faulty equipment.

The harm produced by improper usage, wear and tear, manipulation by a third party, catastrophes or any other cause beyond the control of Televés S.A. is not included in the guarantee.

Televes

DECLARATION OF CONFORMITY Nº 110531171411

DECLARACIÓN DE CONFORMIDAD
DECLARAÇÃO DE CONFORMIDADE
DECLARATION DE CONFORMITE
DICHIARAZIONE DI CONFORMITÀ
DEKLARACJA ŻGODNOSCI
DECLARATIE DE CONFORMITATE
KONFORMITETSERKLÆRING
CONFORMITEITSVERKLARING
VASTAVUSE SERTIFIKAAT
KONFORMITÄTSERKLÄRUNG
ΠΙΣΤΟΠΟΙΗΤΙΚΟ ΣΥΜΜΟΡΦΩΣΗΣ
FÖRSÄKRAN OM ÖVERENSSTÄMMELSE
VAATIMUSTENMUKAISUUSVAKUUTUS
ATITIKTIES DEKLARACIJA
ДЕКЛАРАЦИЯ СООТВЕТСТВИЯ
MEGFELELŐSSÉGI NYILATKOZAT
BEKREFTELSE
ДЕКЛАРАЦІЯ ВІДПОВІДНОСТІ

Manufacturer / *Fabricante / Fabricante / Fabricant / Fabbricante / Fabrikant / Κατασκευαστής / Tillverkare / Valmistaja / Producent / Gamintojas / Изготовитель / Producator / Gyártó / Fabrikant / Producent / Fabrikant / Виробник / Valmistaja:*

Televes S.A.
Rua Benéfica de Conxo, 17 - 15706 - Santiago de Compostela - Spain

Declare under our own responsibility the conformity of the product / *Declara bajo su exclusiva responsabilidad la conformidad del producto / Declara sob sua exclusiva responsabilidade a conformidade do produto / Déclare sous notre propre responsabilité la conformité de ce produit / Dichiara sotto la sua esclusiva responsabilità la conformità del prodotto / Wir übernehmen die Verantwortung für die Konformität des Produktes / Πιστοποιούμε με δική μας ευθύνη την συμμόρφωση του προϊόντος / Försäkrar om överensstämmelse enligt tillverkarens eget ansvar för produkten / Vakuutamme yksinomaan omalla vastuullamme tuotteen yhdenmukaisuus / Oświadczamy na własną odpowiedzialność zgodność wyrobu / Deklarujemy savo atsakomybe, kad produktas yra atitinkamas / Заявляем с полной своей ответственностью о соответствии продукта / Declarăm pe propria răspundere ca produsul este în conformitate cu cerințele esențiale și celalalte prevederi aplicabile / Saját felelősségünkre kijelentjük, hogy a termék megfelel / Erklærer under vårt eget ansvar overensstemmelse for produktet / Erklærer under vårt egen ansvarsforsvensimmelsen for produktet / Wij nemen de verantwoording voor de conformiteit van het product / Заявляє з повною своєю відповідальністю що до відповідності продукта / Kinnitame toote vastavust:*

Reference / *Referencia / Referência / Référence / Articolo / Artikelnummer / Αξίωση / Referens / Referentsi / Numer Katalogowy / Produkto numeris / Apmukys / Referinta / Termékszám / Varenummer / Varenummer / Artikelnummer / Apmukys / Vide:*

5806XX

Description / *Descripción / Descrição / Description / Descrizione / Beschreibung / Περιγραφή / Beskrivning / Kuvaus / Opis / Produkto aprašas / Описание / Descriere / Leírás / Beskrivelse / Beskrivelse / Beschrijving / Опис / Kirjeldus:*

TWIN MODULATOR T0X

Trademark / *Marca / Marca / Marque / Marchio / Handelsmarke / Μάρκα / Varumärke / Tavaramerkki / Marka / Prekės ženklas / Торговая марка / Marca / Márkanév / Varemærke / Varemerke / Handelsmerk / Торговельна марка / Kaubamärk:*

Televes

With the requirements of / *Con los requerimientos de / Com as especificações de / Avec les conditions de / Con i requisiti di / Die Voraussetzungen erfüllen / Με τις απαιτήσεις του / Enligt följande bestämmelser / Seuraavien määrityksien / Zgodność z wymogami / Atitinka reikalavimus / Требованиям / In conformitate cu / Az alábbi követelményekhez / Med bestemmelserne / Med bestemmelsene / In overenstemming met / відповідно до вимог / tingimustel:*

- **Low Voltage Directive 2006 / 95 / EC.**
- **EMC Directive 2004 / 108 / EC.**

Following standards/ *Con las normas / Com as normas / Selon les normes / Con le norme / Folgende Anforderung / Ακόλουθα πρότυπα / Följande standard / Seuraavien standarden / Zastosowanie następujących norm / Pagal standartus / Следующих стандартов / Respecta următoarele standarde / A Következő szabványoknak / Følgende standarder / Følgende standarder / Følgende richtlijnen en normen / Наступних стандартів / Järgnistele standarditele:*

EN 60728-11:2005, EN 50083-2:2006

Santiago de Compostela, 31/5/2011

CE

José L. Fernández Carnero
Technical Director

Televes

European technology Made in EUrope

NP100
100 products in 18 months

T.OX

F.O. TRANSMITTER & RECEIVER

REF. 2333 & 2335

They are modules that convert the RF signal processed by a headend (87 - 2150MHz), into an optical signal for distribution through fiber. Subsequently, this signal is converted back to RF for adaptation to a coaxial distribution network.

HD

Made in EU

- **High energy efficiency**.
- **High power Optical Transmitter** (4mW).
- **Control of RF levels** to optimize the quality parameters in the optical transmission.
- **Monitoring the optical signal** emitted and received with alarm activation.
- **Multi window Receiver** (1200 - 1600nm).
- **Receiver with high RF output power** (114dBµV in MATV and 117dBµV in IF).

REF	DESCRIPTION	EAN 13 CODE
2333	FO Transmitter without Return CH.	8424450147184
2335	FO Receiver without Return CH.	8424450147603

NP100
100 products in 18 months

SIGNAL DISTRIBUTION THROUGH OPTICAL FIBER

LOW EQUIVALENT NOISE AND HIGH OPTICAL POWER.
OPTIMAL DISTRIBUTION OF TELEVISION SIGNALS (SMATV) IN OPTICAL FIBER NETWORKS

TECHNICAL SPECIFICATIONS

Reference			2333
INPUT	Input frequency	MHz	87 - 2150
	Max. MATV input level DIN 45004B	dBµV	102
	Max. SAT IF input level DIN VDE0885/12		107
	Equivalent input noise at 807 MHz	dBm/Hz	-150,7
	Equivalent input noise at 2GHZ		-145,8
	Regulation margin	dB	0 - 18
OUTPUT	Wavelength	nm	1310
	Max. optical power emitted	dBm	6
	Optical connector		SC/APC
GENERAL	Powering	Vdc	12 - 24
	Consumption at 24Vdc	mA	105
	Protection index	dBm	6
	Dimensions (W x H x D)	mm	50 x 216 x 175

Reference			2335
INPUT	Wavelength	nm	1200 - 1600
	Detection bandwidth	MHz	1 - 3000
	Optical connector		SC/APC
OUTPUT	Output frequency	MHz	87 - 2150
	Max. MATV output level DIN45004B	dBµV	114
	Max. SAT IF output level DIN VDE0885/12		117
	Regulation margin	dB	0 - 18
GENERAL	Powering	Vdc	12 - 24
	Consumption at 24Vdc	mA	105
	Protection index	dBm	6
	Dimensions (W x H x D)	mm	50 x 216 x 175

TYPICAL APPLICATION

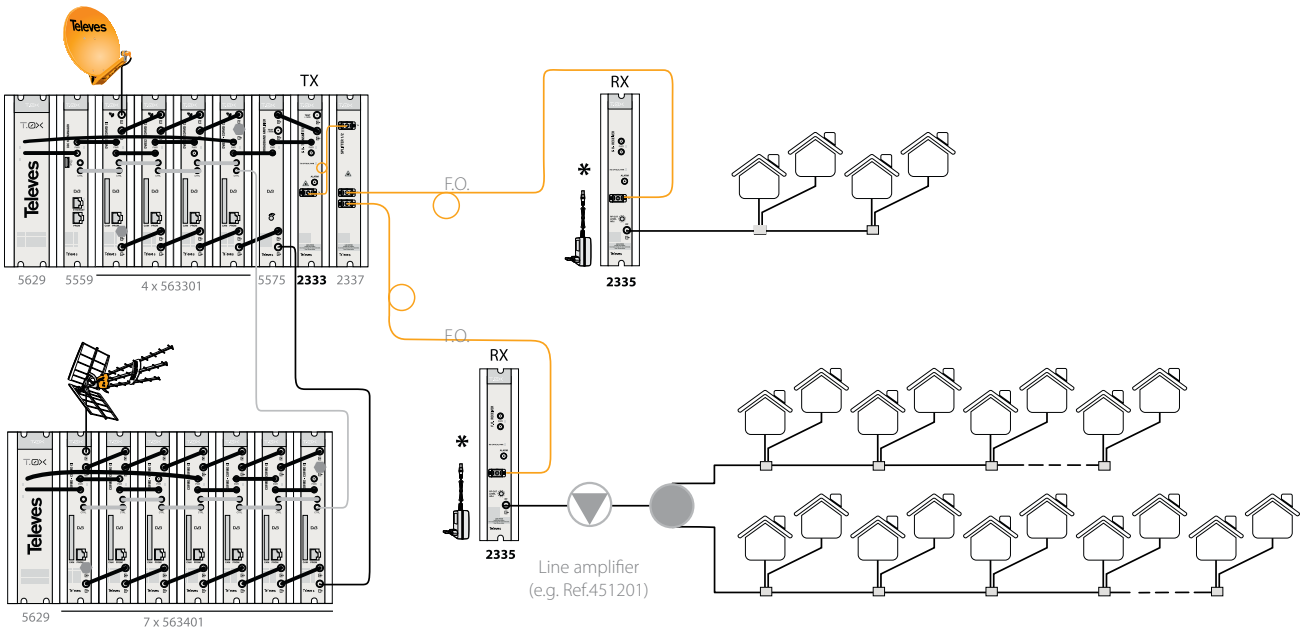

* PSU 15V / 800mA incluided with Ref.2335. It also can be used Ref. 5629.

televes@televes.com

Televes

Televes®

Central MATV Telealimentada
Manual de instrucciones

Amplif. MATV Telealimentado
Manual de instruçoes

Amplificateur MATV
Manuel d'instructions

MATV amplifier
User instructions

Centrale MATV Telealimentada
Manuale utente

Refs. 5338

© Copyright, Televés S.A.

Televes

DECLARATION OF CONFORMITY Nº 090929085307

DECLARACIÓN DE CONFORMIDAD
DECLARAÇÃO DE CONFORMIDADE
DECLARATION DE CONFORMITE
DICHIARAZIONE DI CONFORMITÀ
KONFORMITÄTSERKLÄRUNG
ΠΙΣΤΟΠΟΙΗΤΙΚΟ ΣΥΜΜΟΡΦΩΣΗΣ
FÖRSÄKRAN OM ÖVERENSSTÄMMELSE
VAATIMUSTENMUKAISUUSVAKUUTUS

Manufacturer / *Fabricante / Fabricante / Fabricant / Fabbricante / Fabrikant / Κατασκευαστής / Tillverkare / Valmistaja:* **Televés S.A.**

Address / *Dirección / Direcção / Adresse / Indirizzo / Adresse / Διεύθυνση / Adress / Osoite:* **Rúa Benéfica de Conxo, 17**
15706-Santiago de Compostela (Spain)

VAT/ *NIF / NIF / VAT / VAT / Steuernummer / ΑΦΜ / Moms / ALV:* **A-15010176**

Declare under our own responsibility the conformity of the product / *Declara bajo su exclusiva responsabilidad la conformidad del producto / Declara sob sua exclusiva responsabilidade a conformidade do produto / Déclare sous notre propre responsabilité la conformité de ce produit / Dichiara sotto la sua esclusiva responsabilità la conformità del prodotto / Wir übernehmen die Veranwortung für die Konformität des Produktes / Πιστοποιούμε με δικιά μας ευθύνη την συμμόρφωση του προϊόντος / Försäkrar om överstämmelse enligt tillverkarens eget ansvar för produkten / Vakuutamme yskinomaan omalla vastuullamme tuotteen yhdenmukaisuus:*

Reference / *Referencia / Referência / Référence / Articolo / Artikelnummer / Δήλωση / Referens / Referenssi:* **5337XX, 4512XX, 5335XX, 5338XX, 5339XX**

Description / *Descripción / Descrição / Description / Descrizione / Beschreibung / Περιγραφή / Beskrivning / Kuvaus:* **DTKOM power anıplifier series**

Trademark / *Marca / Marca / Marque / Marchio / Handelsmarke / Μάρκα / Varumärke / Tavaramerkki:* **Televés**

With the requirements of / *Con los requerimientos de / Com as especificações de / Avec les conditions de / Con i requisiti di / Die Voraussetzungen erfüllen / Με τις απαιτήσεις του / Enligt följande bestämmelser / Seuraavien määrityksien:*

- **EMC Directive 2004 / 108 / EC.**
- **Low Voltage Directive 2006 / 95 / EC.**

Following standards / *Con las normas / Com as normas / Selon les normes / Con le norme / Folgende Anforderung / Ακόλουθα πρότυπα / Följande standard / Seuraavien standardien:*

EN 60728-11: 2005: *Cable networks for television signals, sound signals and interactive services - Part 11: Safety*
EN 60065: 2002 + A1: 2006: *Audio, video and similar electronic apparatus - Safety requirements*
EN 50083-2: 2006: *Cable networks for television signals, sound signals and interactive services - Part 2: Electromagnetic compatibility for equipment*

Santiago de Compostela, 29 de Septiembre de 2009

CE

José L. Fernández Carnero
Technical Director

IMPORTANTES INSTRUCCIONES DE SEGURIDAD

Condiciones generales de instalación:

- Antes de manipular o conectar el equipo leer éste manual.
- Para reducir el riesgo de fuego o choque eléctrico, no exponer el equipo a la lluvia o a la humedad.
- No quitar la tapa del equipo sin desconectarlo de la red.
- No obstruir las ranuras de ventilación del equipo.
- Deje un espacio libre alrededor del aparato para proporcionar una ventilación adecuada.
- El aparato no debe ser expuesto a caídas o salpicaduras de agua. No situar objetos o recipientes llenos de agua sobre o cerca del aparato si no se tiene la suficiente protección.
- No situar el equipo cerca de fuentes de calor o en ambientes de humedad elevada.
- No situar el equipo donde pueda estar sometido a fuertes vibraciones o sacudidas.

Operación segura del equipo:

- La tensión de alimentación de éste producto es de: 196-264V~ / 50-60 Hz.
- Si algún líquido u objeto se cayera dentro del equipo, por favor recurra al servicio técnico especializado.
- Para desconectar el equipo de la red, tire del conector, nunca del cable de red.
- No conectar el equipo hasta que todas las demás conexiones del equipo hayan sido efectuadas.
- La base de enchufe al que se conecte el equipo debe estar situada cerca de éste y será facilmente accesible.
- Abrir el equipo solo por personal cualificado.

Descripción de Simbología de seguridad eléctrica:

- Para evitar el riesgo de choque eléctrico no abrir el equipo.

- Éste símbolo indica que el equipo cumple los requerimientos de seguridad para equipos de clase II.

- Éste símbolo indica que el equipo cumple los requerimientos del marcado CE.

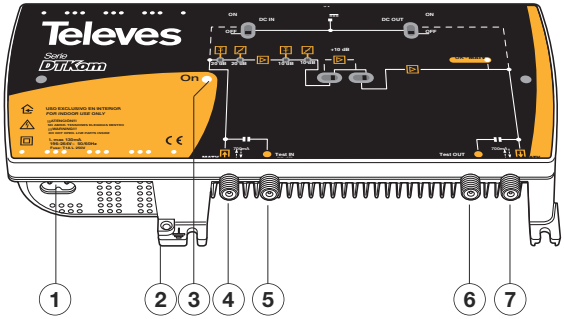

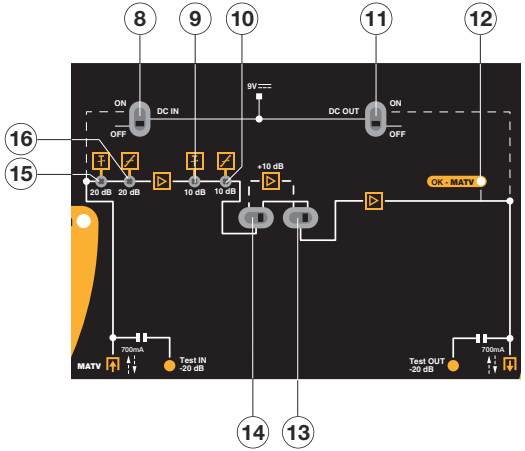

1.- Entrada alimentación red. (230 V~ ±10% 50Hz)
2.- Conexión para toma de tierra
3.- LED de encendido
4.- Entrada MATV.
5.- Test entrada MATV
6.- Test salida MATV
7.- Salida MATV.
8.- Switch configuración telealimentación por conector de entrada
9.- Atenuador señal MATV
10.- Ecualizador señal MATV
11.- Switch configuración telealimentación por conector de salida
12.- LED de estado. Encendido indica presencia de señal.
13.- Switch configuración amplificador canal principal
14.- Switch configuración amplificador canal principal
15.- Atenuador señal MATV
16.- Ecualizador señal MATV

ESPAÑOL

Características técnicas		
Margen de frecuencia	(MHz)	47 - 862
Ganancia	(dB tip.)	41 - 53 (selec.)
Tensión máxima de salida	(DIN 45004B) (dBµV tip.)	123
Tensión máxima de salida	(EN 50083) (IMD3)(1) (dBµV tip.)	120
Tensión máxima de salida	(IMD2)(1) (dBµV tip.)	116
Tensión máxima de salida	CTB, CSO, XMOD(2) (dBµV tip.)	106
Figura de ruido	(dB tip.)	10
Pérdidas de retorno	(dB tip.)	10
Margen de atenuación	(dB tip.)	0 - 18
Margen de ecualización	(dB tip.)	0 - 18
Margen de regulación	(dB tip.)	0 - 10
Margen de preacentuación	(dB tip.)	0 - 10
Tensión de alimentación	(V~)	196 - 264
Consumo total (I. máx)	(mA~)	130
Corriente máx. disponible entrada/salida	(mA⎓)	700
Número máximo de centrales que puede telealimentar		1 (700 mA⎓)
Rango de funcionamiento	(ºC)	-5 a +45
Indice de protección		IP20

(1) 2 Ch -60dB (2) 42Ch -60dB

Esta referencia tiene su aplicación como amplificador de linea en MATV horizontal.

La central puede alimentar o ser alimentada en contínua a través del propio cable coaxial, permitiendo el paso de corriente por el mismo. Se recomienda el uso de cable calidad T-100 o superior en la instalación.

Dispone de un ecualizador variable a la entrada, de 0 a 18 dB de ecualización para toda la banda, asi como de un atenuador variable de 0 a 18 dB.

Antes de su puesta en funcionamiento, asegúrese de que esté correctamente configurada.

De fábrica sale preparada para funcionar a 196-264 V~ / 50-60 Hz con los interruptores de paso de tensión entrada/salida en OFF.

Ejemplo de aplicación

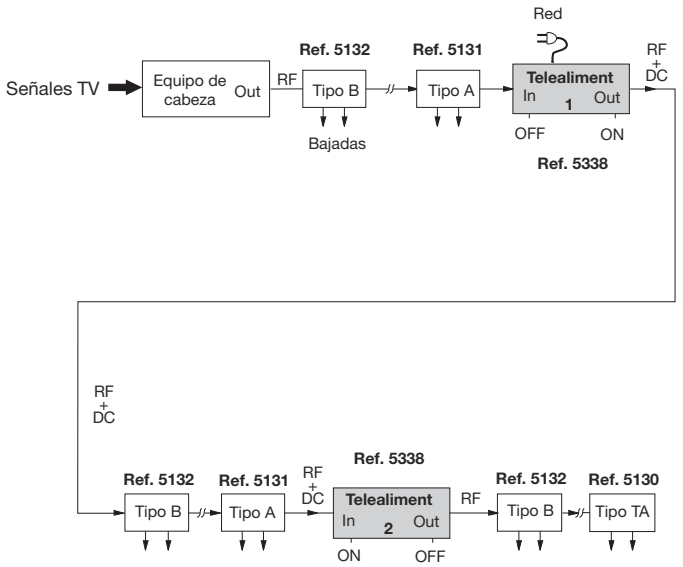

La referencia 5338 puede telealimentar como máximo a 1 ud. referencia 5338

Fijación a la pared

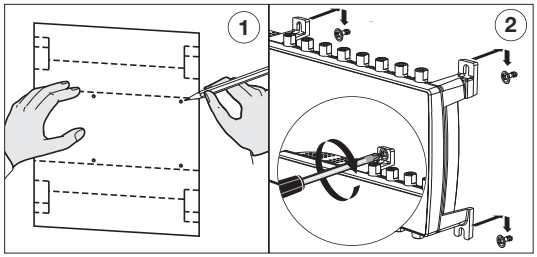

Ajuste de niveles

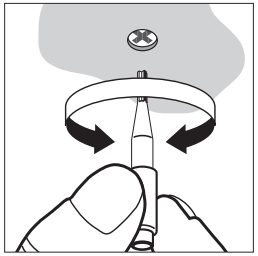

Accionamiento switchs

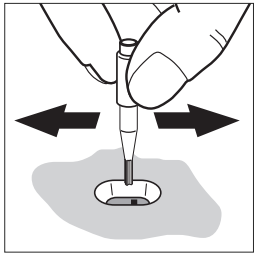

Conexión a tierra

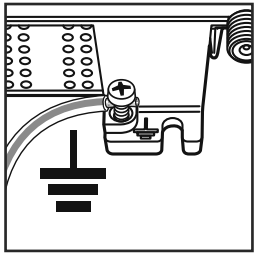

Conexión a red

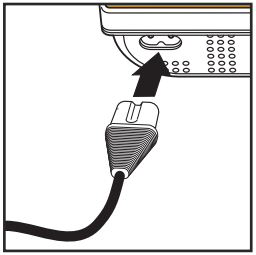

Televes

INSTRUÇÕES IMPORTANTES DE SEGURANÇA

Condições gerais de instalação:

- Antes de utilizar ou ligar o equipamento leia este manual.
- Para reduzir o risco de provocar fogo ou um choque eléctrico, não exponha o equipamento à luz ou à humidade.
- Não trocar a tampa do equipamento sem o desligar da rede.
- Não obstruir as ranhuras de ventilação do equipamento.
- Deixe um espaço livre ao redor do aparelho para proporcionar uma ventilação adequada.
- O aparelho não deve ser exposto a possíveis derrames ou salpicos de água. Não colocar objectos ou recipientes com água por cima ou por perto do aparelho se estes não tiverem a suficiente protecção.
- Não colocar o equipamento perto de fontes de calor ou em ambientes com humidade elevada.
- Não colocar o equipamento onde possa estar submetido a fortes vibrações ou sacudidelas.

Operação segura do equipamento:

- A tensão de alimentação deste produto é de: 196-264V~ / 50-60 Hz.
- Se algum líquido ou objecto caia dentro do equipamento, por favor recorra a um serviço técnico especializado.
- Para desligar o equipamento da rede, tire do conector, nunca do cabo de rede.
- Não ligar o equipamento até que todas as demais ligações do equipamento tenham sido efectuadas.
- A fonte de ligação à qual se liga o equipamento deve estar situada perto deste e terá de ser facilmente acessível.
- Abrir o equipamento apenas por pessoal qualificado.

Descrição de simbologia de segurança eléctrica:

- Para evitar o risco de choque eléctrico não abrir o equipamento.

- Este símbolo indica que o equipamento cumpre os requisitos de segurança para equipamentos de classe II.

- Este símbolo indica que o equipamento cumpre os requisitos da CE.

PORTUGUÊS

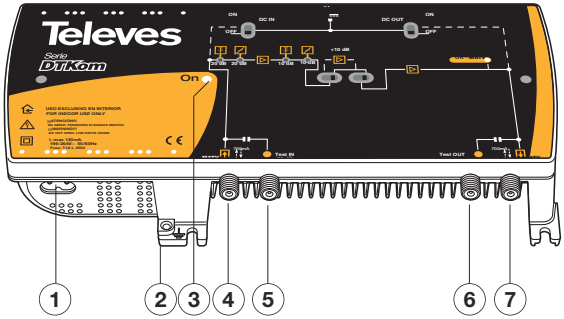

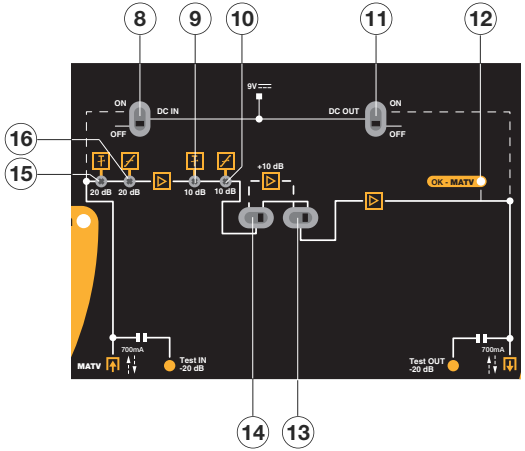

1.- Entrada alimentação rede (196-264 V~ 50/60 Hz)
2.- Ligação à terra
3.- LED de ligado
4.- Entrada MATV
5.- Teste de entrada MATV
6.- Teste de saída MATV
7.- Saída MATV
8.- Switch configuração telealimentação por conector de entrada
9.- Atenuador sinal MATV
10.- Equalizador sinal MATV
11.- Switch configuração telealimentação por conector de saída
12.- LED de estado. Ligado indica presença de sinal
13.- Switch configuração amplificador canal principal
14.- Switch configuração amplificador canal principal
15.- Atenuador sinal MATV
16.- Equalizador sinal MATV

Características técnicas		
Margem de frequência	(MHz)	47 - 862
Ganho	(dB tip.)	41 - 53 (selec.)
Tensão máxima de saída	(DIN 45004B) (dBµV tip.)	123
Tensão máxima de saída	(EN 50083) (IMD3)(1) (dBµV tip.)	120
Tensão máxima de saída	(IMD2)(1) (dBµV tip.)	116
Tensão máxima de saída	CTB, CSO, XMOD(2) (dBµV tip.)	106
Figura de ruido	(dB tip.)	10
Perdas de retorno	(dB tip.)	10
Margem de atenuação	(dB tip.)	0 - 18
Margem de equalização	(dB tip.)	0 - 18
Margem de regulação	(dB tip.)	0 - 10
Margem de pré-acentuação	(dB tip.)	0 - 10
Tensão de alimentação	(V~)	196 - 264
Consumo total (I. máx)	(mA~)	130
Corrente máx. disponível entrada/saída	(mA⎓)	700
Número máximo de centrais que pode tele-alimentar		1 (700 mA⎓)
Gama de funcionamento	(ºC)	-5 a +45
Índice de proteção		IP20

(1) 2 Ch -60dB (2) 42Ch -60dB

Esta referência tem sua aplicação como amplificador de linha em MATV horizontal.

A central pode alimentar ou ser alimentada continuamente através do próprio cabo coaxial, permitindo a passagem de corrente por ele mesmo. Recomenda-se o uso do cabo de qualidade T-100 ou superior na instalação.

Dispõe de um equalizador variável à entrada, de 0 a 18 dB de equalização para toda a banda, assim como de um atenuador variável de 0 a 18 dB.

Antes de ser posto em funcionamento, tenha certeza de que esteja corretamente configurada.

Da fábrica sai preparada para funcionar a 196-264 V~ / 50-60 Hz com os interruptores de passagem de tensão entrada / saída em OFF.

PORTUGUÊS

Exemplo de aplicação

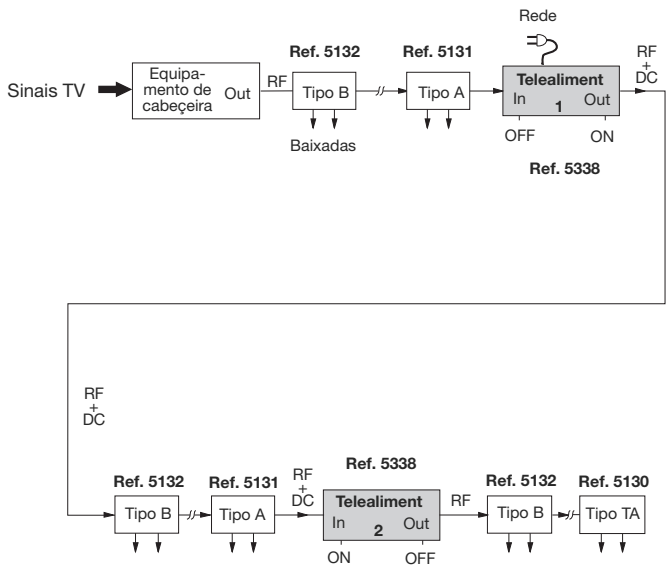

A referência 5338 pode tele-alimentar como máximo 1un. da referência 5338

Fixação na parede

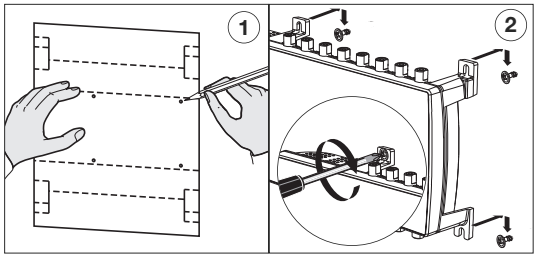

Ajuste dos níveis

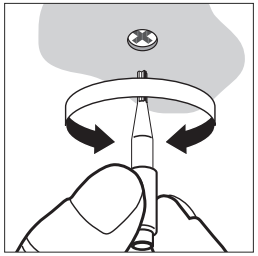

Acionamento

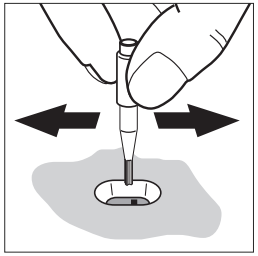

Ligação à terra

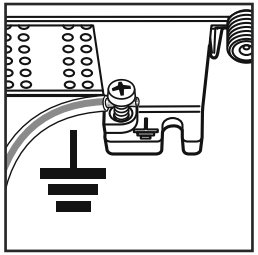

Ligação à rede

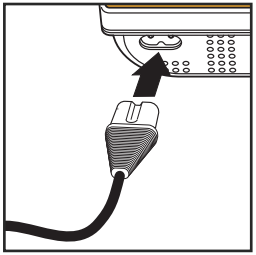

Televes

CONSIGNES DE SECURITE IMPORTANTES

Conditions générales d'installation:

- Lire la notice avant de manipuler ou brancher l'appareil.
- Afin de réduire le risque d'incendie ou de décharge électrique, ne pas exposer l'appareil à la pluie ou à des projections d'eau.
- Ne pas retirer le couvercle de l'appareil sans le débrancher.
- Ne pas obstruer les entrées de ventilation.
- Merci de permettre la circulation d'áir autour de l'áppareil.
- L'appareil ne doit pas être exposé à des chutes ou projections d'eau. Ne pas placer d'objets ou de récipients contenant de l'eau à proximité immédiate sans protection.
- Ne pas placer l'appareil près d'une source de chaleur ou dans un milieu fortement humide.
- Ne pas placer l'appareil dans un lieu exposé à de fortes vibrations ou secousses.

Utilisation de l'appareil en toute sécurité:

- La tension d'alimentation de ce produit est de: 196-264V~ / 50-60 Hz.
- Si un liquide / objet tombe à l'intérieur de l'appareil, référez-en au service technique spécialisé.
- Pour débrancher du secteur, tirez sur la prise et jamais sur le câble
- Ne pas brancher l'appareil avant que toutes les autres connections aient été effectuées.
- La prise à laquelle l'appareil sera branché doit être située à proximité et facilement accessible
- Le produit ne peut être ouvert que par du personnel qualifié.

Description des symboles de sécurité électrique:

- Afin d'éviter le risque de décharge ne pas ouvrir l'appareil.

- Ce symbole indique que l'appareil répond aux exigences de sécurité des appareils de classe II.

- Ce symbole indique que cet appareil répond aux exigences de la norme CE.

FRANÇAIS

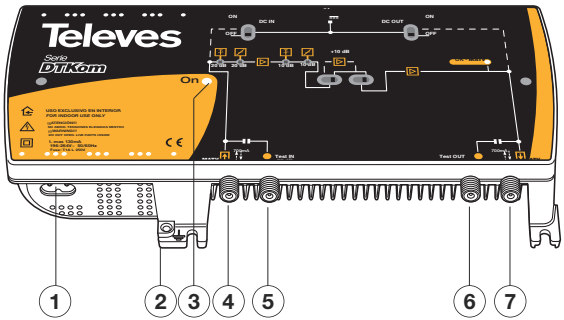

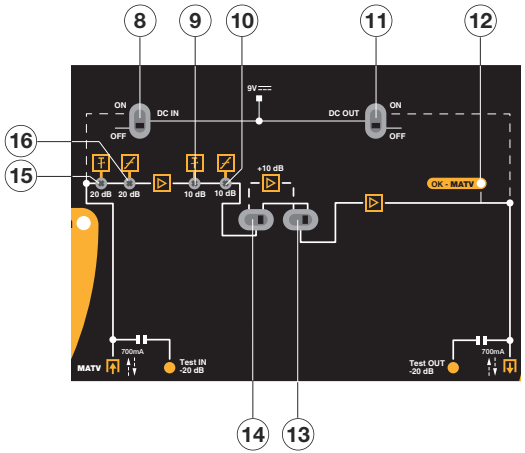

1.- Entrée d´alimentation du réseau (196-264 V~ 50/60 Hz)
2.- Branchement pour prise de terre
3.- LED d'allumage
4.- Entrée MATV
5.- Entrée Test MATV
6.- Sortie Test MATV
7.- Sortie MATV
8.- Switch de configuration pour telealimentation par le connecteur d'entrée
9.- Atténuateur signal MATV
10.- Égalisateur signal MATV
11.- Switch de configuration pour telealimentation par le connecteur de sortie
12.- LEDs d´état. Allumé indique la présence d´une signal
13.- Switch configuration amplificateur voie principale
14.- Switch configuration amplificateur voie principale
15.- Atténuateur signal MATV
16.- Égalisateur signal MATV

Caractéristiques techniques		
Bande passante	(MHz)	47 - 862
Gain	(dB typ.)	41 - 53 (sèlec.)
Tension maximale de sortie	(DIN 45004B) (dBµV typ.)	123
Tension maximale de sortie	(EN 50083) (IMD3)(1) (dBµV typ.)	120
Tension maximale de sortie	(IMD2)(1) (dBµV typ.)	116
Tension maximale de sortie	CTB, CSO, XMOD(2) (dBµV typ.)	106
Figure de bruit	(dB typ.)	10
Pertes de retour	(dB typ.)	10
Marge d´atténuation	(dB typ.)	0 - 18
Marge d´égalisation	(dB typ.)	0 - 18
Marge de régulation	(dB typ.)	0 - 10
Marge de préaccentuation	(dB typ.)	0 - 10
Tension d´alimentation	(V~)	196 - 264
Consommation totale (I. máx)	(mA~)	130
Courant max. disponible entrée/sortie	(mA⎓)	700
Nombre de produits pouvant être téléalimentés		1 (700 mA⎓)
Temp. de fonctionnement	(ºC)	-5 à +45
Indice de protection		IP20

(1) 2 Ch -60dB (2) 42Ch -60dB

Cette référence a son application comme amplificateur de ligne en MATV horizontal.

La central peut alimenter ou être alimentée en continu par le câble coaxial. La qualité du câble à utiliser avec ce produit doit être du type T-100 ou supérieur.

Elle a un égalisateur variable à l´entrée, de 0 a 18dB sur toute la bande, ainsi qu'un atténuateur variable de 0 a 18 dB.

Avant la mise en service, vérifier que tout est configuré correctement.

Elle est configurée en usine pour fonctionner en 196-264 V~ 50/60 Hz avec les interrupteurs de passage de tension entrée/sortie en OFF.

FRANÇAIS

Exemple d´application

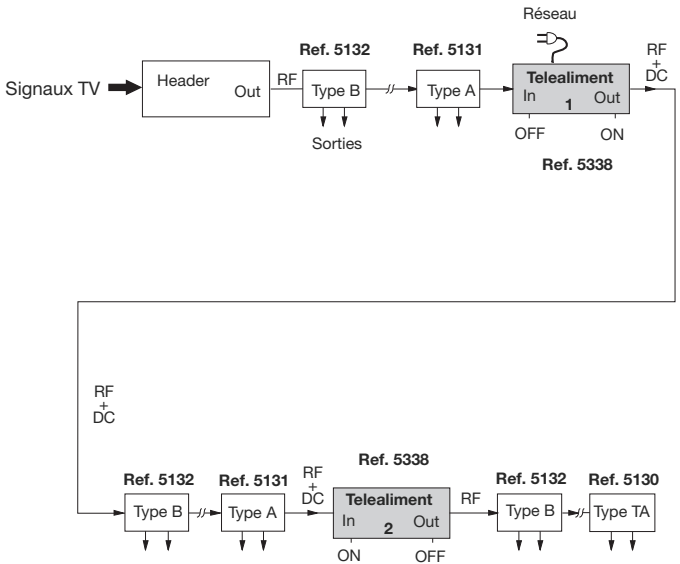

La référence 5338 peut téléalimenter au maximum 1 ud. référence 5338

Fixation au mur

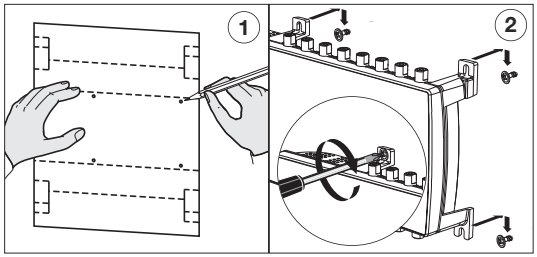

Réglage de niveau

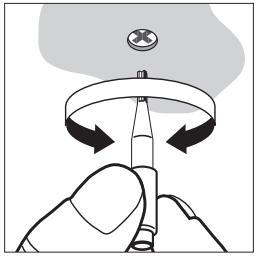

Fonctionnement switch

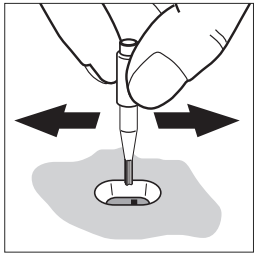

Mise à la terre

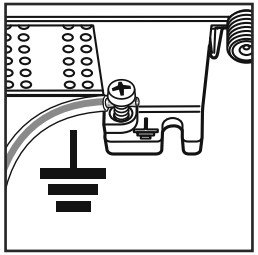

Mise sous tension

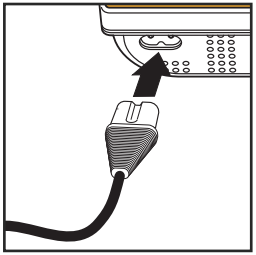

Televes

IMPORTANT SAFETY INSTRUCTIONS:

General installation conditions:

- Before handling or connecting the equipment, please read this manual.
- In order to reduce the risk of fire or electric shock, do not expose the equipment to rain or moisture.
- Do not take the cover off the equipment without disconnecting it from the mains.
- Do not obstruct the equipment's ventilation system.
- Please allow air circulation around the equipment
- The equipment must not come into contact with water or even be splashed by liquids. Do not place containers with water on or near the equipment if it is not adequately protected.
- Do not place the equipment near sources of heat or in excessively moisture conditions.
- Do not place the equipment where it may be affected by strong vibrations or knocks.

How to use the equipment safely:

- The powering supply of this product is: 196-264V~ / 50-60 Hz.
- If any liquid or object falls inside the equipment, please contact a specialized technician.
- To disconnect the equipment from the mains, pull from the connector, and never pull from the cable.
- Do not connect the equipment until all the other connections have been made.
- The mains socket that is going to be used to connect the equipment should be located nearby and should be easily accessible.
- Open the equipment only by qualified personnel.

Description of the electrical safety symbols:

- To avoid the risk of electric shock, do not open the equipment.

- This symbol indicates that the equipment complies with the safety requirements for class II equipment.

- This symbol indicates that the equipment complies with the requirements of CE mark.

ENGLISH

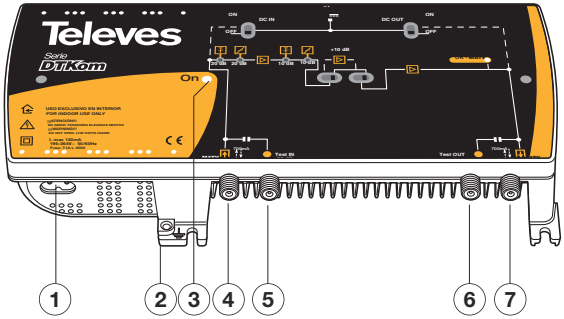

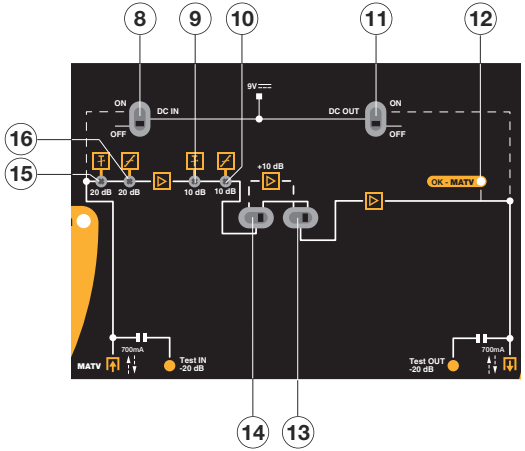

1.- Mains supply input (196-264 V~ 50/60 Hz)
2.- Ground connection
3.- On LED
4.- MATV input
5.- MATV input test
6.- MATV output test
7.- MATV output
8.- Configuration switch for tele-alimentation through the input connector
9.- MATV signal attenuator
10.- MATV signal equalizer
11.- Configuration switch for tele-alimentation through the output connector
12.- Status LED. “On” position means signal presence
13.- Configuration switch for main channel amplifier
14.- Configuration switch for main channel amplifier
15.- MATV signal attenuator
16.- MATV signal equalizer

Technical characteristics		
Frequency range	(MHz)	47 - 862
Gain	(dB typ.)	41 - 53 (select.)
Maximum output level	(DIN 45004B) (dBµV typ.)	123
Maximum output level	(EN 50083) (IMD3)(1) (dBµV typ.)	120
Maximum output level	(IMD2)(1) (dBµV typ.)	116
Maximum output level	CTB, CSO, XMOD(2) (dBµV typ.)	106
Noise figure	(dB typ.)	10
Return losses	(dB typ.)	10
Attenuator	(dB typ.)	0 - 18
Equalizer	(dB typ.)	0 - 18
Interstage attenuator	(dB typ.)	0 - 10
Interstage equalizer	(dB typ.)	0 - 10
Powering voltage	(V~)	196 - 264
Total consumption (I. máx)	(mA~)	130
Max. current available at the input/output	(mA⎓)	700
Maximum number of amplifiers that can be line powered		1 (700 mA⎓)
Operation margin	(ºC)	-5 to +45
Protection index		IP20

(1) 2 Ch -60dB (2) 42Ch -60dB

This reference has been designed as a line amplifier (line extender unit) to provide low distortion at high output levels.

It incorporates a flat frequency response 18dB attenuator, an 18dB equalizer, a 10dB interstage attenuator and a 10dB interstage equalizer.

This product has been made to be 196-264 V~ mains powered.

However, it can also be line powered with 9Vdc either through the output or through the input (each amplifier can power another one).

To interrupt the unit being powered through the output or the input, move switches to OFF position (default position).

ENGLISH

Application example

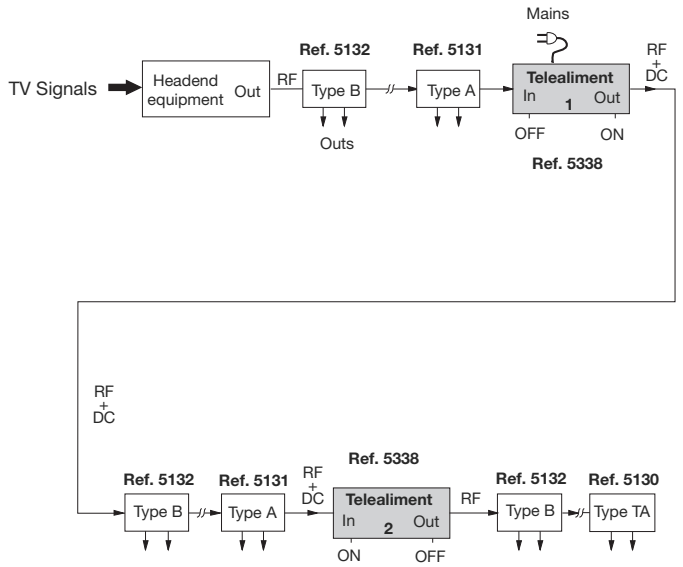

Ref. 5338 only can line-power another ref. 5338

Wall fixation

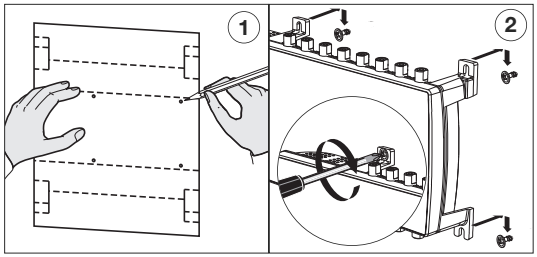

Levels setting

Switches drive

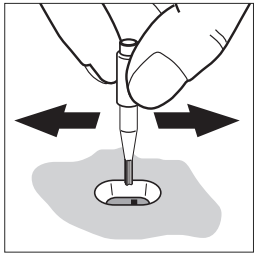

Ground connection

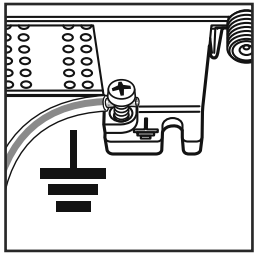

Mains connection

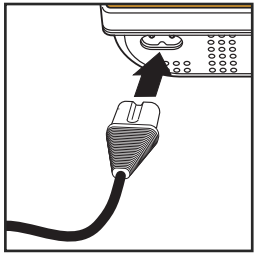

Televes

IMPORTANTI ISTRUZIONI PER LA SICUREZZA

Condizioni generali per l'installazione:

- Prima di utilizzare o collegare il prodotto, prego leggere per intero il presente manuale.
- Per evitare il rischio di incendio o folgorazione, non esporre il prodotto alla pioggia o all'umidità.
- Non togliere il coperchio dell'alimentatore senza prima averlo staccato dalla rete.
- Non ostruire le feritoie per la ventilazione.
- Permettere la circolazione d'aria intorno al prodotto.
- Il prodotto non deve entrare in contatto con acqua o essere bagnato da liquidi. Non posizionare recipienti contenenti acqua sopra o vicino al prodotto si non adeguatamente protetto.
- Non mettere il prodotto vicino a fonti di calore o in posti con umidità eccessiva.
- Non posizionare il prodotto in luoghi soggetti a forti vibrazioni o sollecitazioni meccaniche.

Come utilizzare il prodotto in modo sicuro:

- L'alimentazione di questo prodotto è: 196-264V~ 50/60Hz.
- Se del liquido o qualsiasi oggetto penetra nel prodotto scollegarlo immediatamente dalla rete e contattare un tecnico specializza.
- Per scollegare il prodotto dalla rete, non tirare il cavo ma solo la spina.
- Collegare l'alimentatore alla rete solo dopo aver effettuato tutte le altre connessioni.
- La presa di rete deve essere vicina al prodotto per garantire un ottimo funzionamento.
- Aprire l'apparato soltanto da personale qualificato.

Descrizione dei simboli e sicurezza elettrica:

- Per evitare il rischio di incendi o folgorazioni, non aprire il prodotto.

- Questo simbolo indica che il prodotto è conforme ai requisiti di sicurezza richiesti per i dispositivi di cglisi II.

- Questo simbolo indica che il prodotto è conforme ai requisiti del contrassegno del CE.

ITALIANO

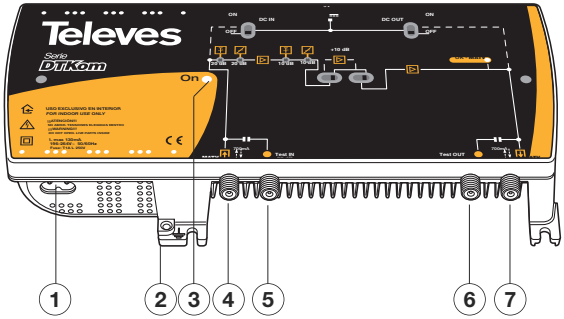

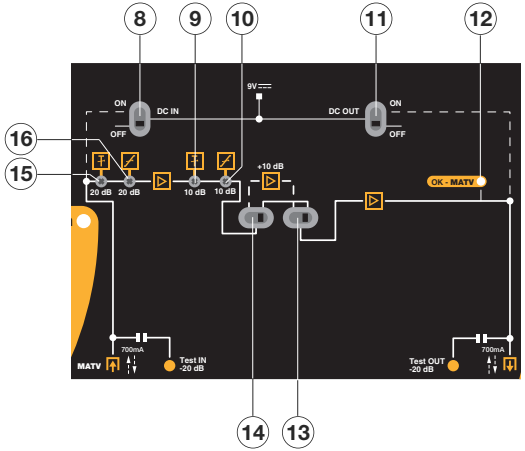

1.- Entrata alimentazione rete (196-264 V~ 50/60 Hz)
2.- Connessione per presa a terra
3.- LED di accensione
4.- Entrata MATV
5.- Test entrata MATV
6.- Test uscita MATV
7.- Uscita MATV
8.- Switch configurazione telepower presa di entrata
9.- Attenuatore segnale MATV
10.- Equalizzatore segnale MATV
11.- Switch configurazione telepower presa di uscita
12.- LED di stato. Acceso indica presenza del segnale
13.- Switch configurazione amplificatore canale principale
14.- Switch configurazione amplificatore canale principale
15.- Attenuatore segnale MATV
16.- Equalizzatore segnale MATV

Caratteristiche tecniche		
Margini di frequenza	(MHz)	47 - 862
Guadagno	(dB tip.)	41 - 53 (selez.)
Tensione massima d'uscita	(DIN 45004B) (dBµV tip.)	123
Tensione massima d'uscita	(EN 50083) (IMD3)(1) (dBµV tip.)	120
Tensione massima d'uscita	(IMD2)(1) (dBµV tip.)	116
Tensione massima d'uscita	CTB, CSO, XMOD(2) (dBµV tip.)	106
Fattore di rumore	(dB tip.)	10
Perdite di ritorno	(dB tip.)	10
Margini di attenuazione	(dB tip.)	0 - 18
Margini di equalizzazione	(dB tip.)	0 - 18
Margine di regolazione	(dB tip.)	0 - 10
Margine di preenfasi	(dB tip.)	0 - 10
Tensione di alimentazione	(V~)	196 - 264
Consumo totale (I. máx)	(mA~)	130
Corrente max. disponibile ingresso/uscita	(mA⎓)	700
Numero massimo di centrali che può telealimentare		1 (700 mA⎓)
Campo di funzionamento	(ºC)	-5 a +45
Indice di protezion		IP20

(1) 2 Ch -60dB (2) 42Ch -60dB

La seguente dicitura ha la sua applicazione come amplificatore di linea in MATV orizzontale.

La centrale può alimentare o essere alimentata continuamente tramite il proprio cavo coassiale, permettendo così il passaggio di corrente tramite lo stesso. Si raccomanda l'utilizzo del cavo qualità T-100 o superiore nell'installazione.

È dotato di un equalizzatore variabile all'entrata, da 0 a 18 dB di equalizzazione per tutta la banda, e anche di un attenuatore variabile da 0 a 18 dB.

Prima della sua messa in funzione, assicurarsi di controllare che abbia una configurazione corretta.

Esce dalla fabbrica preparata per funzionare a 196-264 V~ / 50-60 Hz con gli interruttori di passaggio di tensione Entrata/Uscita in posizione OFF.

ITALIANO

Esempio di applicazione

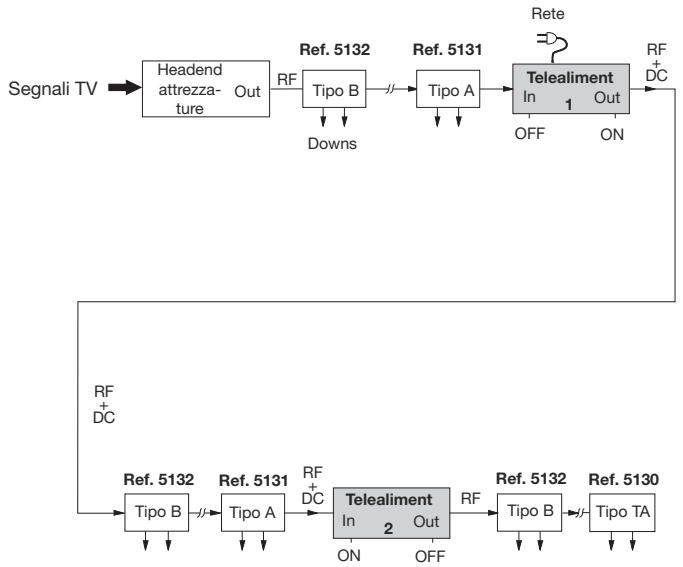

L'articolo 5338 può telealimentare un massimo di 1 unità.

Fissaggio a parete

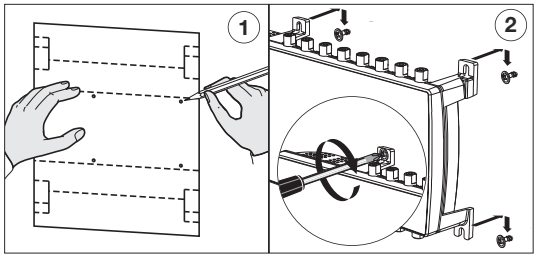

Regolazione dei livelli

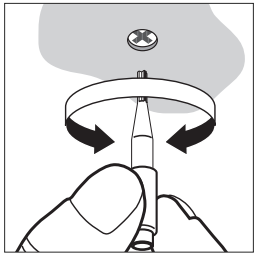

Azionamento switches

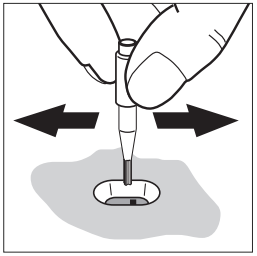

Connessione a terra

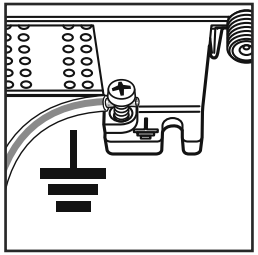

Connessione alla rete

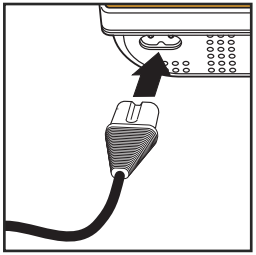

Televes

RED COMERCIAL - COMMERCIAL NETWORK

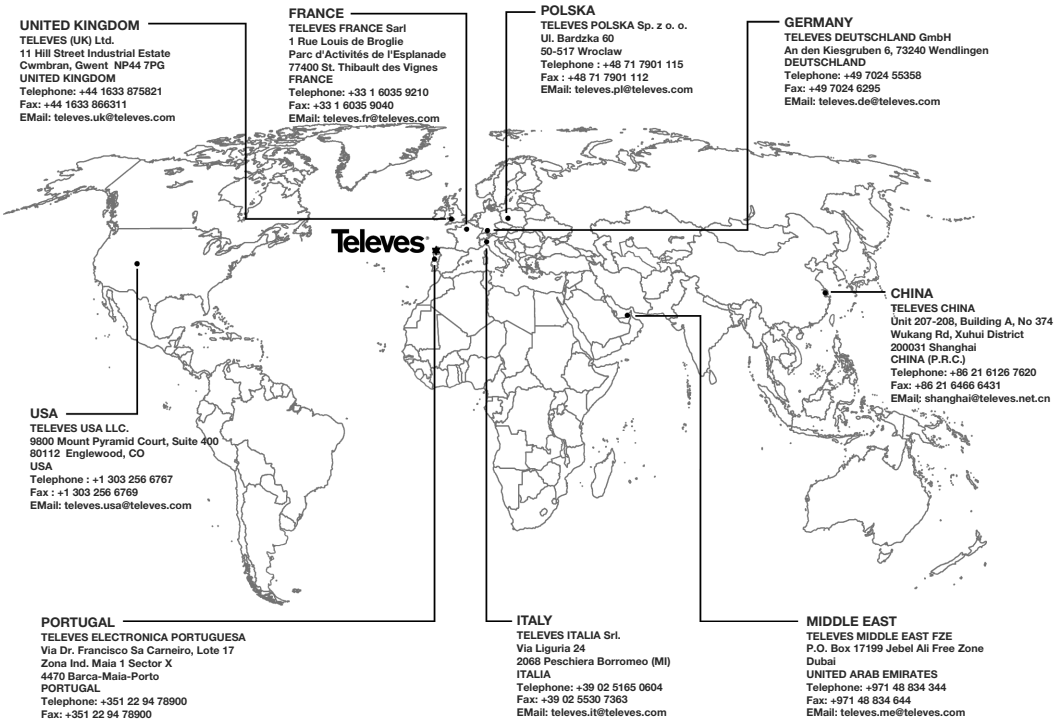

Sucursales / Distributors

Para conocer nuestra red de sucursales en el mundo, le rogamos consulte en nuestra pagina web

Please visit Televés web site to find your nearest Official Distributor

Televes®

Rúa Benéfica de Conxo, 17
15706 - Santiago de Compostela
ESPAÑA (SPAIN)

Tel: +34 981 52 22 00
Fax: +34 981 52 22 62

televes@televes.com
www.televes.com

01030083-002

✱ **Oficinas Centrales / Head Office**
● **Delegaciones / Subsidiaries**

AENOR Registro de Empresas RE-0015/98
EcoNet Certified Quality System
Miembro de número del DVB Digital Video Broadcasting

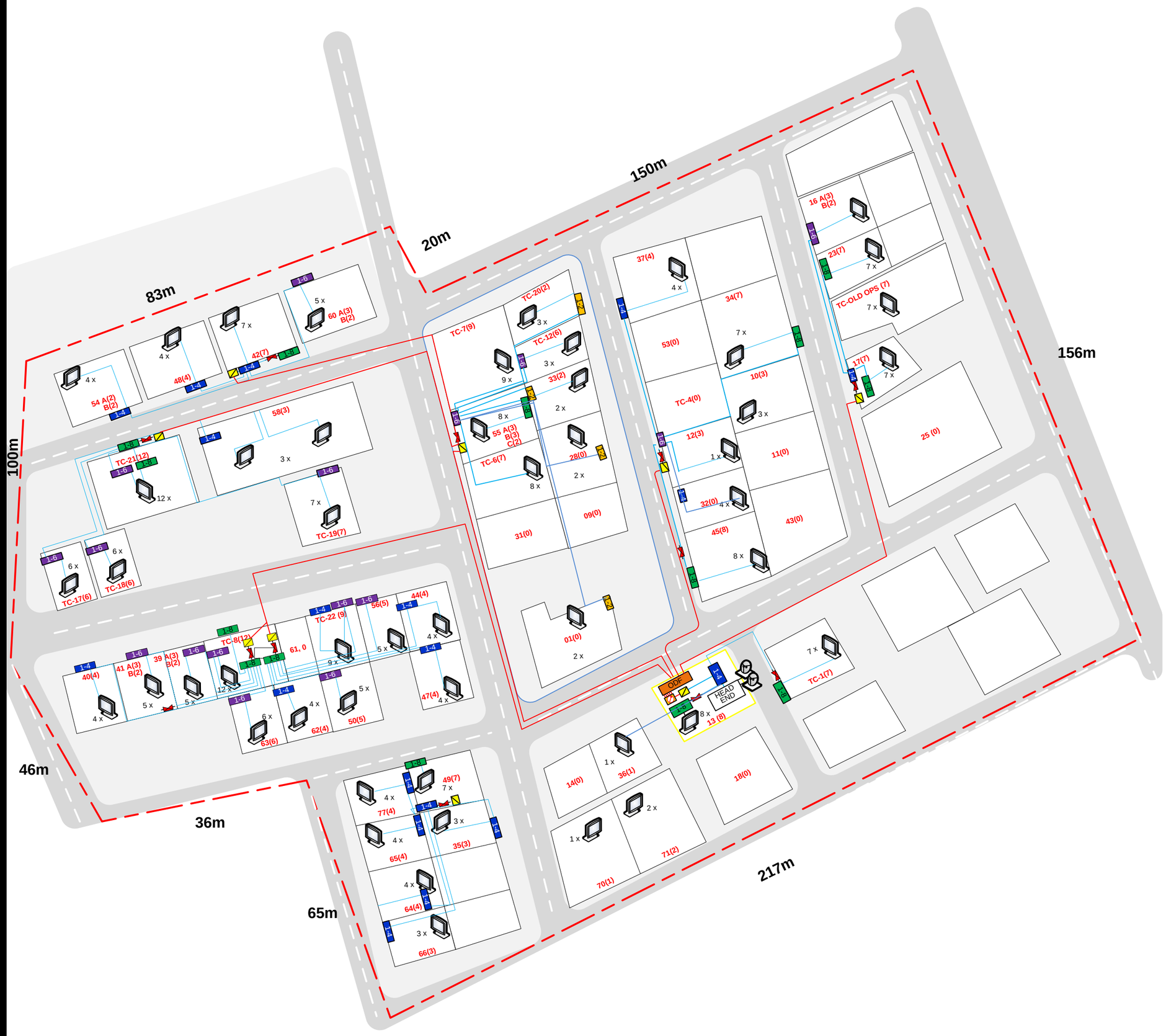

LEGEND

240		TELEVISION / RG6 DROP
		RG6 COAXIAL CABLE
		FIBER OPTIC CABLE
8	ODF	OPTICAL DISTRIBUTION FRAME
6		FIBER TO COAXIAL CONVERTER
1		1:8 FIBER OPTIC SPLITTER
1		1:4 FIBER OPTIC SPLITTER
2	1-2	1:2 SPLITTER
15	1-4	1:4 SPLITTER
16	1-6	1:6 SPLITTER
18	1-8	1:8 SPLITTER
41		AMPLIFIER

LEGEND

NO. OF RG6 DROP

45(8)

BUILDING NUMBER