Embassy of the United States of America,
Jakarta, Indonesia
Facility Management

Concur	Initial
Mike Duprez	
Julius Handoko	
Mangsi Ginting	

SPECIFICATION

Address : The U.S. Consulate General Surabaya

Project title : Triplex Booster Pump Replacement project

Description of work : To remove existing Triplex Booster pumps and install new Triplex Booster pump system.

Number of work days : 2 (two) weeks

Warranty : 1 (one) year

Government Estimate : $ 30,000 (funded by 7901.C)

Commencement date : ASAP

DIVISION 01
GENERAL REQUIREMENT

011100 SUMMARY OF WORKS

Description of Work
The U.S. Consulate General Surabaya requires the services of a qualified contractor to provide material, labor and services to replace the existing Triplex Vertical Turbine Booster Pump system in its compound utility room at Jl. Citra Raya Niaga, no.2 Citraland, Surabaya.

Summary of Work
The construction shall consist of following works detailed in the drawings and specifications:

1. Providing sufficient information of materials and technical data, shop drawings with detail and section for approval prior to construction.
2. Removal of existing triplex booster pumps and installation of new booster pump system with vertical multistage centrifugal type of pump with VFD controller.
3. Miscellaneous cleaning works.

Contractor will provide labor, materials, equipment, and other necessary items required and related to the completion of the project.

011113 WORKS COVERED BY CONTRACT DOCUMENTS

I. Existing Triplex Booster Pump system removal works

1. The control panel to remain.
2. Remove existing 6” pipes, flanges and all accessories at the supply line.
3. Remove existing SyncroFlo triplex vertical turbine booster pump motors including the pump system.
4. During construction, contractor must provide the availability and maintain the standard quality of raw water supply for the compound, by providing a temporary pump system if required.
5. The electrical apparatus associated with the existing system are to be reused for the new system.
6. Contractor shall concern to protect other equipment in this utility area such as: piping installation, electrical conduits, water treatment control panels, etc. Any damage caused by the work is contractor responsibility to repair or replace.

II. New Triplex Booster Pump system installation works

1. Install new 6” pipes, flange and all accessories at the supply line with specification of stainless steel-304 (food grade processing equipment).
2. Install new booster pump systems with specification of vertical multistage centrifugal pump refer to the attachment of new pump specifications.
3. Install electrical motors with existing electrical power lines refer to the attachment of new motor specifications. The new motors are controlled by VFD (Variable Frequency Drive) and other additional control system as required by the remaining control panel.

4. Install 3 ea. new covers for underground potable water tank with specification stainless steel-304.
5. Contractor shall provide operation and maintenance manual and all warranty information, as well as technical training for preventive maintenance of the new pump system to the FM technician.

III. Triplex Booster Pumps Sequence of Operation

1. If the system is reset from a complete alarm shutdown or after power is restored, the first pump is delayed from starting for 2 - 3 seconds.
2. The first pump starts only if system pressure low, the second pump delayed from starting for 10 seconds and the third pump delayed for 20 seconds.
3. The lead pump shutdown during period of low or no flow.
4. The lead pump shutdown when the pressure switch or the high suction pressure switch gets high pressure signal.
5. The lead pump shutdown if system pressure low.
6. When the lead pump is required to run again, it starts on low pressure stage after 2-4 second delay.
7. When the lead pump is running and the demand in the system exceeds its capacity, the system pressure decreased. The lag pump starts 2-4 seconds after the Low System Pressure Switch tripped. The lag pump will run for the duration of 5 minutes minimum run time. Both lead pump and lag pump will be running during this period. At the end of the lag pump's minimum run time, if the system pressure is not low, the lag pump will turn off in 15 seconds later. The lag pump will remain off if the lead pump can maintain system pressure by itself. If the demand in the system is still greater than the lead pump's capacity, the system pressure will immediately decrease and the lag pump cycle will be repeated; otherwise, it will stay off.
8. If the demand in the system ever exceeds the capacity of the lead and lag pumps combined, system pressure will decrease. The second lag pump will start 2-4 seconds after the Low System Pressure Switch tripped. The second lag pump will run for the duration of 5 minute minimum run time. All three pumps will be running during this period.
9. At the end of the second lag pump minimum run time, if the system pressure is not low, the second lag pump will turn off in 15 seconds later. If the demand on the system still exceeds the capacities of the lead and lag pumps combined, the second lag pump will be restarted and the cycle will be repeated; otherwise, it will stay off.
10. When the Low System Pressure Switch tripped, the Low System alarm light will be energized. This provides a visual indication that the system is working properly and also aids in setting the Low System Pressure Switch in the field.
11. If the Low System Pressure Switch remains tripped for more than 30 seconds continuously, the Low System Pressure Alarm will latch on and the alarm horn will sound.
12. When the system discharge pressure falls below the setting of the Low System pressure switch (see Control Panel Data Sheet), the low system pressure alarm light turns on and pressure sequencing is activated as previously described.
13. If the system pressure raises when conditions change or when additional pumps are started, the low system pressure light will turn off. However, if the system pressure

remains low for 30 seconds continuously, the low system pressure alarm light will latch on and the alarm horn will sound. At this point the alarm has to be manually reset.

14. If suction pressure falls below the setting of the Low Suction pressure switch (see Control Panel Data Sheet) or the break tank level control signals a low level condition, the alarm starts timing.
15. If the suction pressure or tank level rises within 10 seconds, no action is taken. However, if the suction pressure or tank level remains low for 10 seconds, all pumps will be locked off, the alarm light latches on, and the alarm horn will sound. At this point the alarm need to be manually reset before the pumps can run again, in manual or automatic.
16. All pumps will remain off until the system pressure falls to the setting of the low system pressure switch. When the low system pressure alarm light turns on, the last lag pump will start. If pressure returns to normal, the low system pressure light will turn off and the lag pump will run alone. All energy saving control remains active so the pump can shut down and restart as needed.
17. If the system pressure goes high again, the cycle will be repeated but the remaining lag pump will run if it is available. If all available pumps have run and the system pressure goes high again, the cycle will be repeated again but all pumps will be locked out until the alarm is reset.
18. Control Power Indicating Light turns on when the control circuit energized.
19. BAS monitoring system shows On-Off status of the motors.

011400 WORK RESTRICTIONS

Protection

Contractor will keep the project area cleaned and remove debris from project site at the end of each day. Loitering around the project site is not permitted.

Contractor shall be responsible for protecting U.S. Government property on site from damage, scratch, dust, water, fire or theft, and ensure caution to prevent accidents caused by various work. Install proper warning signs and protection to the site.

Contractor’s operations may not cause disruption of site activities. Contractor’s operations shall not generate disagreeable environmental effects, including the emission of noise, fumes, or other emanations. Construction debris shall be monitored at all times. Visual or audible disturbances shall be kept to a minimum, and any work progress, which might cause such disturbances shall be discussed with the COR in advance.

Contractor will provide mixture box to mix mortar or concrete to prevent damage to the mixing site. Contractor is responsible to repair any damage caused by the implementation of the work. Contractor will do general rewiring and re-piping if required as a result of the various works.

011413 ACCESS TO SITE

The contractor shall permit the facilities manager and COR or any officer authorized by the COR to have access to the work at all times during the execution of work.

The contractor superintendent shall meet daily with the COR (unless waived by the COR) to review progress and plans

011423 CONDITIONS

1. Contractor to inspect and measure the project thoroughly before submitting the bid. Project inspection and measurement must be done after the site meeting unless determined otherwise. No chance for another inspection and measurement will be given to any contractor between the site meeting and bid submission time frame, unless stated otherwise. Submission of the bid is an agreement by the contractor to carry out the project in a turnkey condition.
2. Drawings and specifications are used as a general guide only. Anything not mentioned in the specifications or drawings, but related to common requirements for completion of the project in a satisfactory manner will be determined by the COR at the site meeting and becomes part of the contract.
3. After the site meeting and before submitting the bid, the contractors can ask clarification about the project by submitting a written question to Contracting Officer. The answer to the question will be distributed to all contractors invited to the site meeting and becomes part of the contract.
4. After the site meeting and commencement of the project, any unforeseen conditions that arise to ensure proper completion of the project will become the contractor's responsibility at no additional cost to the U.S. Government, unless justified otherwise or caused by the embassy.
5. Information shown on the drawings related to the existing conditions represents the present knowledge, but without guarantee of accuracy. Report conditions that conflict with the contract documents to the COR. Do not deviate from the contract documents without written direction from the COR.
6. Contractor shall not perform any additional work without prior approval from the COR.
7. Upon finding any termite infestation in any part of the building within the perimeter wall of the property, the contractor is responsible to report immediately to the COR and CO.
8. Contractor shall not work on materials containing asbestos, such as piping insulation or “Eternit” ceiling panels during construction, and must stop immediately if these materials are found during the work. The work will then be suspended by the Contracting Officer per FAR 52.242.14 (Section F) and contractor may be required to modify its operation. No work shall restart without the CO’s approval.

012000 PRICE AND PAYMENT PROCEDURES

The Contractor shall complete this project according to all specifications and requirements stated in this contract. The price listed below shall include all materials, labors, equipment, tools, transportation, insurance, overhead, profit, and all expenses. The Contract Type shall be “Firm-Fixed Price”.

Total Contract Price: _____ Rupiah

The price stated above is total contract price. Detail of prices shall be submitted in form of Bill of Quantity (BOQ). The BOQ shall consist of description, quantity, and unit price of material and labor. Cost of labor can be submitted either Unit Price or Lump Sum.

013119 PROJECT MEETINGS

The Embassy or the contractor may request a meeting (either on-site or off-site) to clarify any part of this contract. The project manager, contractor's superintendent, COR, and other required persons will normally attend.

The contractor will keep minutes of every meeting and provide written copies (within two working days) to the COR for approval.

013213 SCHEDULING OF WORK

Contractor shall schedule work with COR 1 (one) day after the contract issuance.

Project Schedules

Format

- Prepare schedules as horizontal bar chart with separate bar for each major portion of Work or operation, identifying first workday of each week.
- Sequence of Listing: Chronological order of start of each item of Work.
- Scale and Spacing: To provide space for notations and revisions.

Content

- Show complete sequence of construction by activity, with dates for beginning and completion of each element of construction.
- Identify each item by Specification Section number.
- Provide sub-schedules for each stage of work.
- Provide sub-schedules to define critical portions of entire Schedule.
- Coordinate content with Schedule of Values.
- Submit schedule allowing for a 10-day review prior to commencing.

Revision to Schedules

- Indicate progress of each activity to date of submittal and projected completion date of each activity.
- Identify activities modified since previous submittal, major changes in scope, and other identifiable changes.
- Provide narrative report to define problem areas, anticipated delays, and impact on Schedule. Report corrective action taken, or proposed, and its effect.

Submittals:

- Submit initial Schedules within five (5) days after date of Notice to Proceed. After review, resubmit required revised data within five days.
- Submit revised Progress Schedules with each Application for Payment.

Distribution:

- Distribute copies of reviewed Schedules to project site file, sub-Contractors, suppliers, and other concerned parties.
- Instruct recipients to promptly report, in writing, problems anticipated by projections indicated in Schedules.

Liquidated Damages:

If the Contractor fails to complete the work within the time specified in the contract, or any extension, the Contractor shall pay liquidated damages to the Government in the amount of ***$120*** for each calendar day of delay until the work is completed or accepted.

If the Government terminates the Contractor's right to proceed, liquidated damages will continue to accrue until the work is completed. These liquidated damages are in addition to excess costs of repurchase.

Government will determine to terminate the Contractor's right to proceed based on but not limited to the following circumstances:

- Contractor show lack of response or slow response to any procedure required to start the project. If this occur, Government has right to appoint second lowest bidder to do the project within this liquidated damages clause or totally cancel the contract and issue new contract with new contractor.
- Contractor show slow progress in one or more work item in the course of the project that could cause delay to the overall project. If this occurs, Government could either take over the execution of the work item by in-house maintenance team or appoint another contractor to continue and finish the work in timely manner within this liquidated damages clause.

013323 SHOP DRAWINGS, PRODUCT DATA AND SAMPLES SUBMITTAL PROCEDURES

General

For each part of the construction Specified in this scope of work, submit the following as applicable, in accordance with Contract Clauses and Conditions.

- The contractor must include written specifications for the materials and a sample of material (as required) along with his/her quotation.
- Submit shop drawings showing plans/elevations/sections at not smaller than scale 1:100, and details not smaller than scale 1:20.
- Submit as built drawings showing plans/elevations/sections at not smaller than scale 1:100, and details not smaller than scale 1:20 upon the completion of the project.
- Prepare and submit check list that shows weekly construction progress.
- The contractor shall submit proposed plan and details of staging area.

Samples

Submit physical examples to illustrate materials and workmanship; and to establish standards by which completed work is judged, if requested.

Contractor Responsibilities

- Review shop drawings, material data, and samples prior to submission. Initial, sign, or stamp, certifying the Contractor's review of the submittal.
- Verify:
    - Field measurements.
    - Field construction criteria.
    - Catalog numbers and similar data.
- Coordinate each submittal with requirements of Work and Contract Documents.

- Contractor's responsibility for errors and omissions in submittals is not relieved by COR review of submittals.
- Contractor's responsibility for deviations in submittals from requirements of Contract Documents is not relieved by the COR's review of submittals, unless COR gives written acceptance of specific deviations.
- Notify COR, in writing at time of submission, of deviations in submittals from requirements of Contract Documents.
- Begin no work which requires submittals until return of submittals with COR's stamp and initials or signature indicating review and indication to proceed as noted. Work performed prior to submission and approval of submittals may be subject for rejection.
- Distribute copies after COR's approval.
- Provide submittal information data in English and dimensions in metric units.
- Long lead item (such as but not limited to metal trusses, clip lock roof and windows) must be submitted for approval no later than 3 (three) days after the contract issuance and after approval, must be ordered within 24 hours.

Submission Requirements

- Schedule submissions to the COR immediately after Contract award.
- Submit three (3) copies of submittals (minimum).
- Submit three (or to be notified) of each sample requested.
- Accompany submittals with transmittal letter containing:
  - Date
  - Project title and number
  - Contractor's name and address
  - The number of each submittal
  - Notification of deviations from Contract Documents
- Provide each set of submittals bound together with a Cover and Table of Contents.

Re-Submission Requirements

- Provide adequate information; submit formal letter(s) and/or reason(s) for deviation.
- Product Data and Samples: Submit new data and samples as required for initial submittal.
- Shop Drawings.
- Revise initial drawings as required and re-submit as specified for initial submittal.
- Indicate on drawings any changes, which have been made other than those requested by the COR.**013526 GOVERNMENTAL SAFETY REQUIREMENTS**

1. Welding and use of open flames in or adjacent to the Embassy properties requires approval from the Facilities Manager or Maintenance Supervisor. Use of explosive actuated fastening devices shall not be used without the prior permission of the Facilities Manager.
2. Observe and enforce all construction safety measures required by the Indonesia Labor Code, Local Building Codes, Workers Compensation Board, Municipal Statutes and Authorities.
3. If any personnel are injured, the contractor has sole responsible for such injury.
4. Powered equipment must be in good condition. Electrical and other utility connections must be properly made. Extension cords will be heavy-duty type suitable for the load involved.

5. The Contractor shall submit for approval a Safety Plan in accordance with the safety regulations of the U.S. Embassy, Department of State and OSHA.
6. The U.S. Embassy's safety regulation follows the U.S. Army Corps of Engineers, Safety and Health Manual EM385-1-1, available on the internet from the Army Corps of Engineers website; Indonesia Labor Code; Local Building Codes; Workers Compensation Board; Municipal Statutes and Authorities. When conflict arises, the code or statute, which is more stringent, shall apply.
7. The Contractor shall provide the appropriate number, size and composition of any and all warning signs as determined by the COR.
8. All forms of smoking - cigarettes, cigars, pipes, e-cigarettes, bidis, hookahs, and other similar smoking media - are prohibited in all Department of State occupied space within 25 feet of openings to buildings (including but not limited to doorways, waiting areas, open widows, air intake ducts)

013553 SECURITY PROCEDURES

Security Requirements and Procedures for Contractors
Contractors who require access to any of the Embassy offices or facilities are required to comply with the following security procedures:

Coordinate with RSO to have all workers that require access to the house report for fingerprints so criminal record checks can be conducted. All workers must bring a valid identification card. Criminal records checks typically take approximately one month to complete. Thus, it is important to have contract workers report as early as possible (within 24 hours after the award of the contract) to RSO to start the process.

Upon successful completion of a criminal record check contractors shall submit working pass request to the RSO thru the COR which will allow them to access the house.
All workers expected to work in the project must be processed in the initial security screening prior to the commencement of the project. Security screening during the course of the project must be avoided as much as possible and if it critically needed, the worker's information required for security screening must be submitted minimum one month prior to the worker's starting date. Failure to comply with this requirement which resulted to the delay of the project will subject to liquidated damages clause.

Unsuitable Workers
Upon the request of the COR, the contractor shall remove any person employed by him who, in the opinion of the COR, is incompetent or has conducted himself improperly. Workers who are found to conduct themselves in an improper manner, such as urination outside the approved toilets, foul language, improper behavior, and other such acts, shall be immediately barred from site. The contractor shall not permit a person who has been removed to return to the work site.

014113 BUILDING CODES

Perform all works in accordance with the Indonesia building codes (Electrical, Plumbing and other codes that pertain to trades involved in this project). In no instance shall a standard identified or established in this section be reduced without written permission from the COR.

014126 PERMITS

Contractor shall be responsible for any permit and administration cost required to perform and complete the project.

014216 DEFINITIONS

"Install," means, "provide and install" unless stated otherwise. "Repair," means, "restores to proper and satisfactorily condition using the minimum of the same material as the existing with equal or exceeds quality." "Upgrade," means, "correct the existing condition and replace all with new material per U.S. Embassy standard" unless stated otherwise. "Remove," means, "dismantle and completely remove all materials specified including other materials required to attach it to the building structure or roof or ceiling or wall or soil" unless stated otherwise.

014300 QUALITY ASSURANCE

Quality Control

Maintain quality control over suppliers, manufacturers, products, services, site conditions, and workmanship to produce work of specified quality.

Examine each phase of work and have defective conditions corrected before starting subsequent operations which include cover, or are dependent upon, work in question.

Utilize qualified personnel who have experience with the specified works to produce workmanship of specified quality. The contractor personnel responsible for the project must qualify as described below:

Senior engineer:	A professional engineer in the related field, having minimum of bachelor degree qualification (S-1) and Engineer license issued by the Government.
Engineer:	A professional engineer in the related field, having bachelor degree qualification (S-1) and Engineer license issued by the Government.
Foreman:	A professional technician, high vocational or diploma education in related field.

Contractor must have the ability and sufficient number of personnel to complete the project within the required time frame and with the required level of performance. Contractor must submit confirmation letter stating the commitment to complete the project as scheduled and to comply to all specifications and list of all personnel that will work in the project complete with information of their respected trade. Personnel list and confirmation letter must be attached to the initial bid document.

The contractor shall apply technical knowledge and specific equipment/tools for related work in the contract. Final inspection and acceptance will be performed by the COR to meet U.S. Government standard.

015100 TEMPORARY UTILITIES

Power Supply, Water and temporary services:
The Embassy will supply free of charge temporary power supply and water for construction proposes. Contractor shall obtain COR approval for the use of utilities prior to the start of its operations. During working, any additional needs must be approved by the COR in advance. The contractor is responsible for furnishing and installing temporary services.

- The electricity supply is located at: (to be discussed during the site survey)
- The water supply (non-potable) is located at: nearest water outlet(s) (to be discussed during the site survey)
- The toilet is located at: (to be discussed during the site survey).

015116 TEMPORARY FIRE PROTECTION

- During construction, the contractor shall comply with fire safety practices as outlined in NFPA and local fire protection codes, and in addition:
- The Embassy requires portable fire extinguishers (stored pressure type, UL fire rating 10A:60B:C) to be readily available at all work sites during entire installation period.
- The contractor is responsible for properly deploying the fire extinguishers to each work area occupied by the contractor e.g. welding site, temporary structure, construction office, storage, tool, and workshop sheds. Proper deployment includes advising the COR on the number of fire extinguishers, transport to and from warehouse and work sites, worker training how to operate the fire extinguisher, etc.
- Contractor's superintendent or other assistant superintendents shall be appointed as project fire warden for entire construction period.

015219 SANITARY FACILITIES

Contractor must supply his workers with proper sanitation facilities, should they not be available on the outside locations. If the COR approves the use of office facilities for the Contractor's use, it is the responsibility of the Contractor to maintain, on a daily basis, the cleanliness of the facilities.

015400 CONSTRUCTION AIDS

Temporary ladders, scaffolds, hoists:
Furnish and maintain temporary ramps, scaffolds, or hoists as required for proper execution of work. Such apparatus, equipment, and construction shall meet requirement of applicable local safety and labor laws.

Storage and Handling Materials/Equipment/Tools:
Special care should be given to handling and storing materials/equipment/tools. The ownership of the items is passed from the contractor only upon acceptance by the COR. Equipment/tools not accepted by the COR is the contractor's sole responsibility.

015400 TEMPORARY BARRICADES

The contractor shall protect the work as its proceeds, protect the area, which is next to the construction, and protect the materials and components from damage and deterioration. Special

consideration should be given to protecting sensitive areas such as hallways, entrances, and walls, floors, and carpets areas from dust and construction activities.

The contractor shall provide barricades as required to protect natural resources, site improvements, existing property, adjacent property, and personnel. Where pedestrian traffic is through or adjacent to work area, the contractor shall provide necessary guardrails and barricades to protect pedestrians and to prevent pedestrian access to work areas. Work area open to weather elements must be covered with tarps to prevent water filtration. Remove guardrails and barricades at completion of construction.

017000 EXECUTION AND CLOSEOUT REQUIREMENTS

Final Completion

After completion of the work, the contractor shall make an appointment with COR for inspection and final acceptance with the signature of COR. The work site and related areas must be in a clean and tidy condition.

WORK PLAN AND DRAWING ATTACHMENT

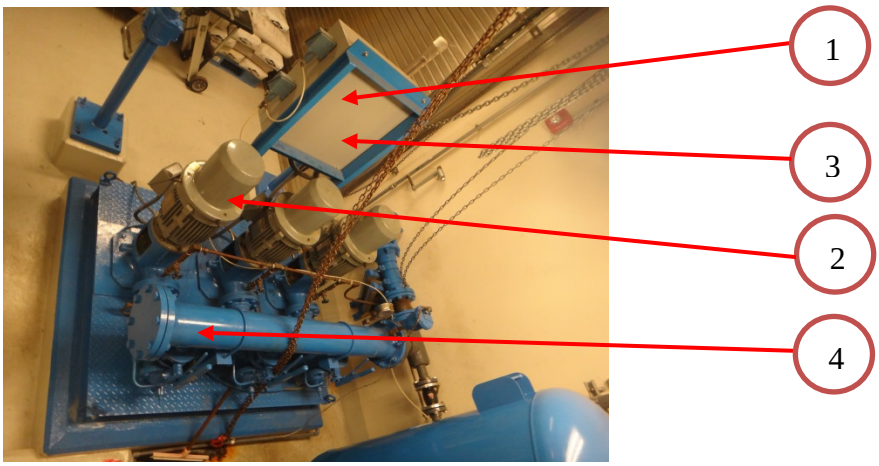

I. TRIPLEX BOOSTER PUMP SYSTEM DEMOLITION PLAN

1. The control panel to remain.
2. Demolish existing SyncroFlo triplex vertical turbine booster pump motors including the pumps system.
3. All electrical apparatus associated with the system to be reused for the new motors.
4. Remove the 6” supply line.

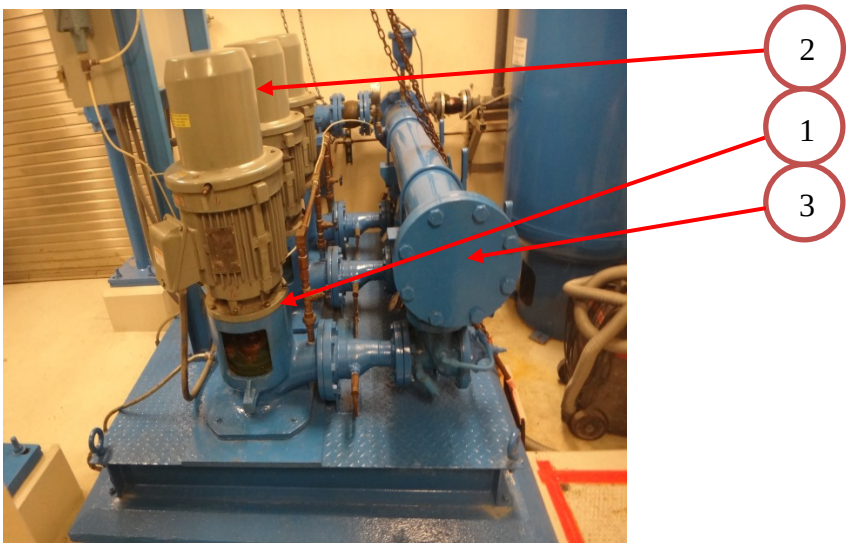

II. NEW TRIPLEX BOOSTER PUMP SYSTEM INSTALLATION PLAN

1. Install new vertical turbine booster pump system (see the attached new pumps schedule)
2. Install electrical motors reusing existing electrical power (see the attached new motor schedule)
3. Install new stainless steel 6” supply line.
4. Maintain building water supply by installing temporary pumps during the installation if required.
5. Provide training on PM of the units to the U.S. CONGEN facilities technicians.

IV. PUMPS SEQUENCE OF OPERATION

TRIPLEX BOOSTER PUMPS SEQUENCE OF OPERATION

20. Whenever the system is reset from a complete alarm shutdown or after power is restored, the first pump is delayed from starting for 2 - 3 seconds.
21. The first pump will only start if system pressure is low, the second pump is delayed from starting for 10 seconds and the third pump is delayed for 20 seconds.
22. The lead pump shuts down during periods of low or no flow.
23. The lead pump will shut down when the lead pump pressure switch or the high suction pressure switch must signal high pressure.
24. The lead pump will shut down when system pressure is low.
25. When the lead pump is required to run again, it will start on low pressure system after 2-4 second delay.
26. If the lead pump is running and the demand on the system exceeds its capacity, the system pressure will decrease. The lag pump will start 2-4 seconds after the Low System Pressure Switch is tripped. The lag pump will run for the duration of its 5 minute minimum run time. Both the lead pump and the lag pump will be running during this period. At the end of the lag pump's minimum run time, if the system pressure is not low, the lag pump will turn off 15 seconds later. The lag pump will remain off if the lead pump can maintain system pressure by itself. If the demand on the system is still greater than the lead pump's capacity, the system pressure will immediately decrease and the lag pump cycle will be repeated; otherwise, it will stay off.
27. If the demand on the system ever exceeds the capacity of the lead and lag pumps combined, system pressure will decrease. The second lag pump will start 2-4 seconds after the Low System Pressure Switch is tripped. The second lag pump will run for the duration of its 5 minute minimum run time. All three pumps will be running during this period.
28. At the end of the second lag pump's minimum run time, if the system pressure is not low, the second lag pump will turn off 15 seconds later. If the demand on the system still exceeds the capacities of the lead and lag pumps combined, the second lag pump will be restarted and the cycle will be repeated; otherwise, it will stay off.
29. Whenever the Low System Pressure Switch is tripped, the Low System alarm light will be energized. This provides a visual indication that the system is working properly and also aids in setting the Low System Pressure Switch in the field.
30. If the Low System Pressure Switch remains tripped for more than 30 seconds continuously, the Low System Pressure Alarm will latch on and the alarm horn will sound.
31. When the system discharge pressure falls below the setting of the Low System pressure switch (see Control Panel Data Sheet), the low system pressure alarm light turns on and pressure sequencing is activated as previously described.
32. If the system pressure raises when conditions change or when additional pumps are started, the low system pressure light will turn off. However, if the system pressure remains low for 30 seconds continuously, the low system pressure alarm light will latch on and the alarm horn will sound. At this point the alarm must be manually reset.
33. If suction pressure falls below the setting of the Low Suction pressure switch (see Control

Panel Data Sheet) or the break tank level control signals a low level condition, the alarm starts timing.

34. If the suction pressure or tank level rises within 10 seconds, no action is taken. However, if the suction pressure or tank level remains low for 10 seconds, all pumps are locked off, the alarm light latches on, and the alarm horn will sound. At this point the alarm must be manually reset before the pumps can be run again, in hand or in automatic.
35. All pumps will remain off until the system pressure falls to the setting of the low system pressure switch. When the low system pressure alarm light turns on, the last lag pump will start. If pressure returns to normal, the low system pressure light will turn off and the lag pump will run alone. All energy saving control remains active so the pump can shut down and restart as needed.
36. If the system pressure goes high again, the cycle will repeat but the remaining lag pump will run if it is available. If all available pumps have been tried and the system pressure goes high again, the cycle will repeat again but all pumps will be locked out until the alarm is reset.
37. Control Power Indicating Light is on when the control circuits are energized.
38. BAS monitoring system must show On-Off status of the motors.
39. The motors shall be equipped with Variable-Frequency Drive feature.

ELECTRICAL DRAWING ATTACHMENT

Existing Single Line Diagram Triplex Booster Pump Control Panel

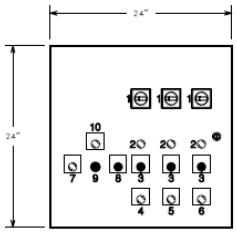

EQUIPMENT DESCRIPTION

1. MOTOR DISCONNECT SWITCH
2. PUMP RUN INDICATING LIGHT
3. PUMP RUN SELECTOR SWITCH
4. PUMP 1 FAIL LIGHT
5. PUMP 2 FAIL LIGHT
6. PUMP 3 FAIL LIGHT
7. CONTROL POWER INDICATING LIGHT
8. ALARM SILENCE/RESET PUSH BUTTON
9. ALARM HORN
10. LOW LEVEL ALARM LIGHT

SyncroFlo
Pumping System Solutions
6700 Best Friend Road - Norcross, GA 30071 - (770) 447-4443 - Fax (770) 447-0230

TWO PUMP
TYPE "PC"

PRODUCTION NUMBER:	290003
DATE:	JUNE 11, 2009
DRAWING NUMBER:	290003C1

Page 302 of 306

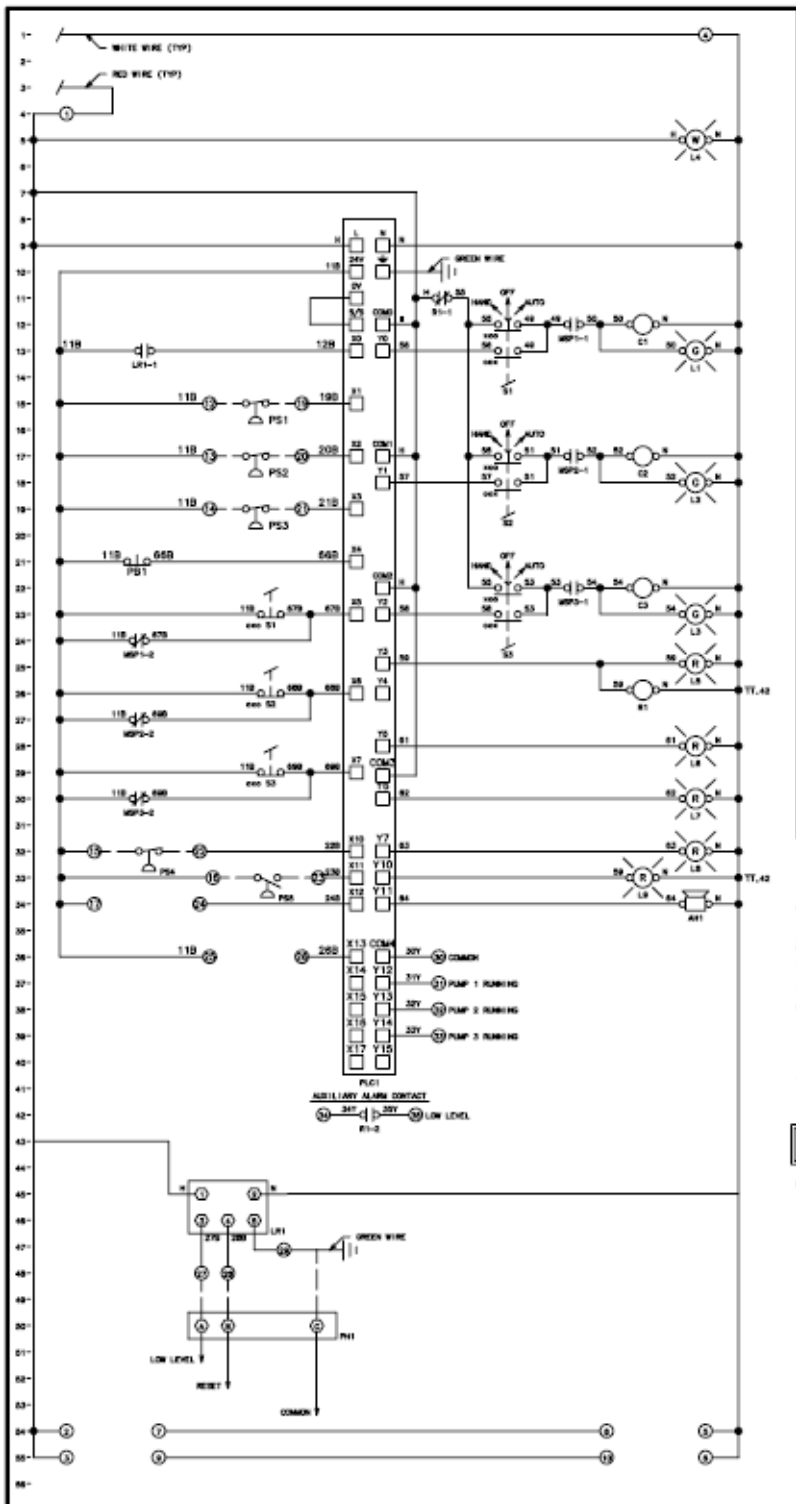

COMPONENT DESCRIPTION	
AH1	ALARM HORN
C1	CONTACTOR-MOTOR STARTER
C2	CONTACTOR-MOTOR STARTER
C3	CONTACTOR-MOTOR STARTER
L1	LIGHT-GREEN (NO.1 PUMP)
L2	LIGHT-GREEN (NO.2 PUMP)
L3	LIGHT-GREEN (NO.3 PUMP)
L4	LIGHT-WHITE (CONTROL POWER)
L5	LIGHT-RED (LOW LEVEL)
L6	LIGHT-RED (PUMP 1 FAIL)
L7	LIGHT-RED (PUMP 2 FAIL)
L8	LIGHT-RED (PUMP 3 FAIL)
L9	LIGHT-RED (LOW SYSTEM PRESSURE)
LR1	LEVEL RELAY-LOW LEVEL
MSP1	MOTOR STARTER PROTECTOR-AUX.CONT.1NO/1NC
MSP2	MOTOR STARTER PROTECTOR-AUX.CONT.1NO/1NC
MSP3	MOTOR STARTER PROTECTOR-AUX.CONT.1NO/1NC
PB1	PUSH BUTTON-(ALARM SILENCE/RESET)
PH1	PROBE HOLDER
PLC1	PROGRAMMABLE LOGIC CONTROLLER
PS1	PRESSURE SWITCH-PUMP 1 FAIL
PS2	PRESSURE SWITCH-PUMP 2 FAIL
PS3	PRESSURE SWITCH-PUMP 3 FAIL
PS4	PRESSURE SWITCH-LOW SYSTEM PRESSURE
PS5	PRESSURE SWITCH-LEAD PUMP
R1	RELAY-LOW LEVEL
S1	SWITCH-(NO.1 PUMP)
S2	SWITCH-(NO.2 PUMP)
S3	SWITCH-(NO.3 PUMP)
(TBC)	TERMINAL BOARD-30 POLE-CONTROL

NOTES

THIS SCHEMATIC CONFORMS TO ALL APPLICABLE REQUIREMENTS OF THE NATIONAL ELECTRICAL CODE. SCHEMATIC DESIGNER DOES NOT WARRANT THAT IT WILL COMPLY WITH MORE RESTRICTIVE LOCAL ELECTRICAL CODES AND DOES NOT WARRANT THE DESIGN OR INSTALLATION OF CONNECTING CIRCUITS OR CIRCUIT DEVICES INSTALLED BY OTHERS WHETHER OR NOT REQUIRED BY NATIONAL OR LOCAL CODES OR BOTH.

ANY MODIFICATIONS OF, OR ADDITIONS TO, THESE CIRCUITS WITHOUT THE WRITTEN CONSENT OF THE DESIGNER WILL VOID ANY WRITTEN OR IMPLIED WARRANTIES.

ELECTRICAL SYMBOLS CONFORM TO NEMA STANDARDS.

ALL ELECTRICAL COMPONENTS SHOWN IN THE DE-ENERGIZED AND DE-PRESSURIZED POSITION.

CONTROL PANEL TO BE GROUNDED BY USER.

ALL WIRE TO BE TYPE THHN, THWN 600V. UNLESS OTHERWISE SPECIFIED.

✱ DENOTES OPTIONAL EQUIPMENT (SEE CONTROL PANEL DATA SHEET FOR WHICH ITEMS APPLY).

○ DENOTES TERMINAL NUMBER OF (TBC).

PROPRIETARY DRAWING

THIS CONFIDENTIAL DOCUMENT IS THE PROPERTY OF

SyncroFlo, Inc.

NORCROSS, GEORGIA

NOT TO BE DUPLICATED WITHOUT WRITTEN PERMISSION OR USED IN ANY WAY DETRIMENTAL TO THE COMPANY

U. L. LISTED ENCLOSED INDUSTRIAL CONTROL PANEL

290003B2
US EMBASSY
-

SyncroFlo
Pumping System Solutions
6700 Best Friend Road - Norcross, GA 30071
(770) 447-4443 - Fax (770) 447-0230

3 PUMP TYPE "PC"
WITH FX1s30

290003	
MAY 19, 2009	
KAH	
KAH	NONE
29000381	

REV.	REVISION	DATE/BY
C	CHANGED SEQUENCING DESIGN	RGM 11/30/09
B	AS BUILT	KAH 7/27/09
A	ADDED LOW PRESSURE, CONTACTS	KAH 5/26/09

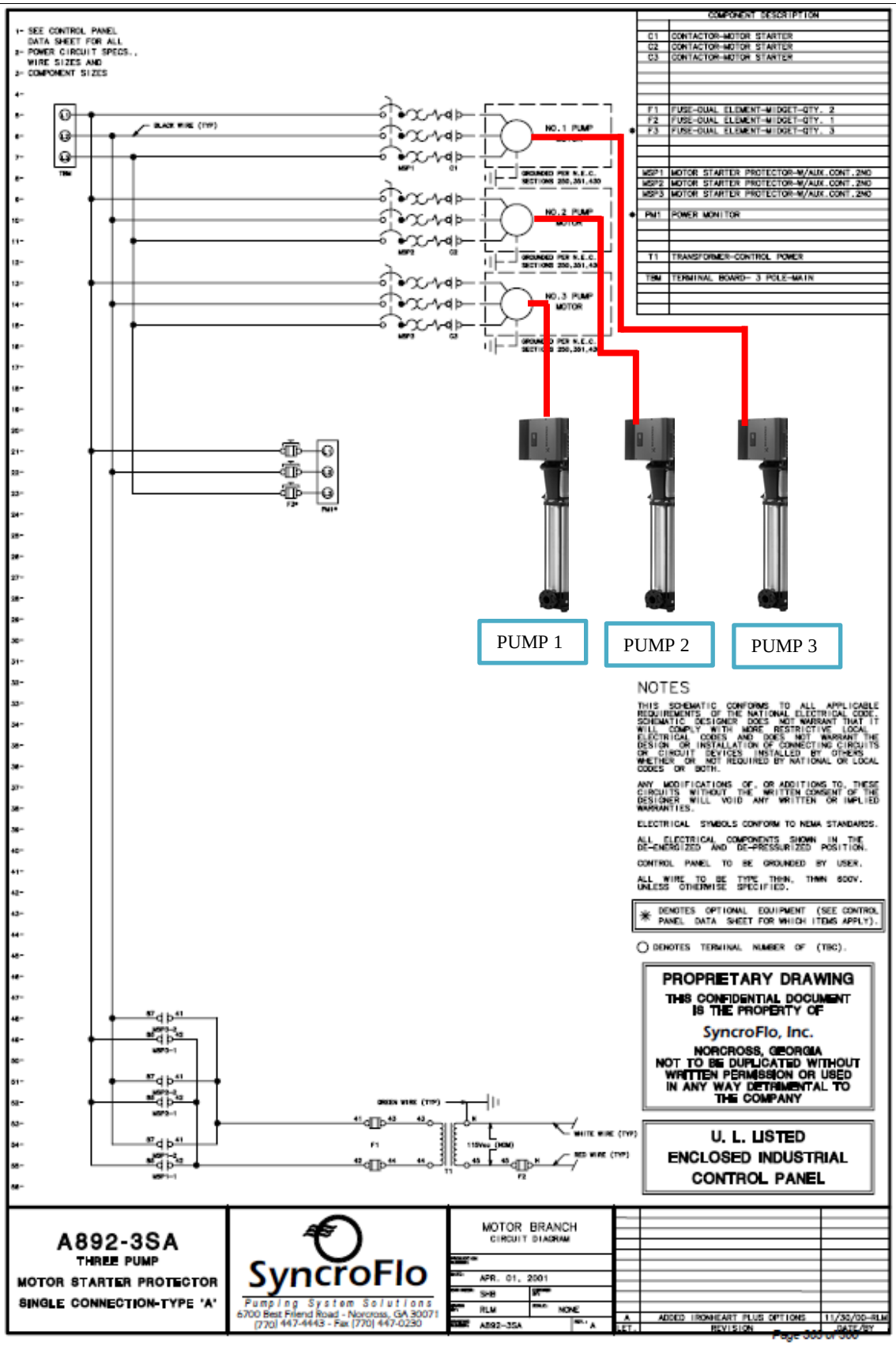
1- SEE CONTROL PANEL DATA SHEET FOR ALL
2- POWER CIRCUIT SPECS., WIRE SIZES AND
3- COMPONENT SIZES
COMPONENT DESCRIPTION
C1 CONTACTOR-MOTOR STARTER
C2 CONTACTOR-MOTOR STARTER
C3 CONTACTOR-MOTOR STARTER
F1 FUSE-DUAL ELEMENT-MIDGET-QTY. 2
F2 FUSE-DUAL ELEMENT-MIDGET-QTY. 1
F3 FUSE-DUAL ELEMENT-MIDGET-QTY. 3
MSP1 MOTOR STARTER PROTECTOR-W/AUX.CONT.2NO
MSP2 MOTOR STARTER PROTECTOR-W/AUX.CONT.2NO
MSP3 MOTOR STARTER PROTECTOR-W/AUX.CONT.2NO
PM1 POWER MONITOR
T1 TRANSFORMER-CONTROL POWER
TBM TERMINAL BOARD- 3 POLE-MAIN
BLACK WIRE (TYP)
NO.1 PUMP MOTOR
NO.2 PUMP MOTOR
NO.3 PUMP MOTOR
PUMP 1
PUMP 2
PUMP 3
NOTES
THIS SCHEMATIC CONFORMS TO ALL APPLICABLE REQUIREMENTS OF THE NATIONAL ELECTRICAL CODE. SCHEMATIC DESIGNER DOES NOT WARRANT THAT IT WILL COMPLY WITH MORE RESTRICTIVE LOCAL ELECTRICAL CODES AND DOES NOT WARRANT THE DESIGN OR INSTALLATION OF CONNECTING CIRCUITS OR CIRCUIT DEVICES INSTALLED BY OTHERS WHETHER OR NOT REQUIRED BY NATIONAL OR LOCAL CODES OR BOTH.
ANY MODIFICATIONS OF, OR ADDITIONS TO, THESE CIRCUITS WITHOUT THE WRITTEN CONSENT OF THE DESIGNER WILL VOID ANY WRITTEN OR IMPLIED WARRANTIES.
ELECTRICAL SYMBOLS CONFORM TO NEMA STANDARDS.
ALL ELECTRICAL COMPONENTS SHOWN IN THE DE-ENERGIZED AND DE-PRESSURIZED POSITION.
CONTROL PANEL TO BE GROUNDED BY USER.
ALL WIRE TO BE TYPE THHN, THWN 600V. UNLESS OTHERWISE SPECIFIED.
✱ DENOTES OPTIONAL EQUIPMENT (SEE CONTROL PANEL DATA SHEET FOR WHICH ITEMS APPLY).
○ DENOTES TERMINAL NUMBER OF (TBC).
PROPRIETARY DRAWING
THIS CONFIDENTIAL DOCUMENT IS THE PROPERTY OF
SyncroFlo, Inc.
NORCROSS, GEORGIA
NOT TO BE DUPLICATED WITHOUT WRITTEN PERMISSION OR USED IN ANY WAY DETRIMENTAL TO THE COMPANY
U. L. LISTED
ENCLOSED INDUSTRIAL
CONTROL PANEL
GREEN WIRE (TYP)
WHITE WIRE (TYP)
RED WIRE (TYP)
A892-3SA
THREE PUMP
MOTOR STARTER PROTECTOR
SINGLE CONNECTION-TYPE 'A'
SyncroFlo
Pumping System Solutions
6700 Best Friend Road - Norcross, GA 30071
(770) 447-4443 - Fax (770) 447-0230
MOTOR BRANCH
CIRCUIT DIAGRAM
APR. 01, 2001
SHB
RLM
NONE
A892-3SA
A ADDED IRONHEART PLUS OPTIONS 11/30/00-RLM
REV. REVISION DATE/BY

MECHANICAL DRAWING ATTACHMENT

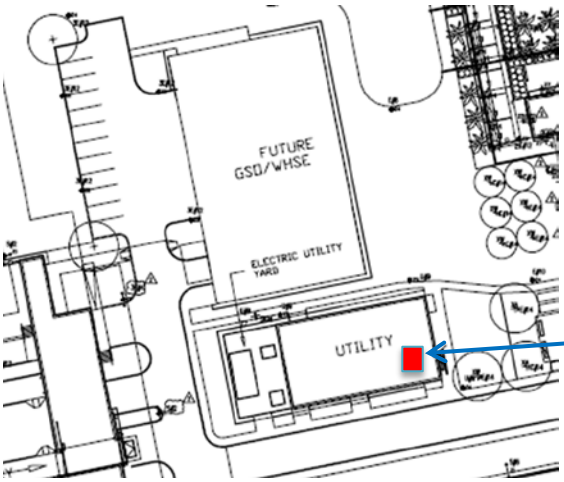

Project Location
Triplex Booster Pump
Replacement
NCC Compound – Utility
Building- Water Treatment
Plant

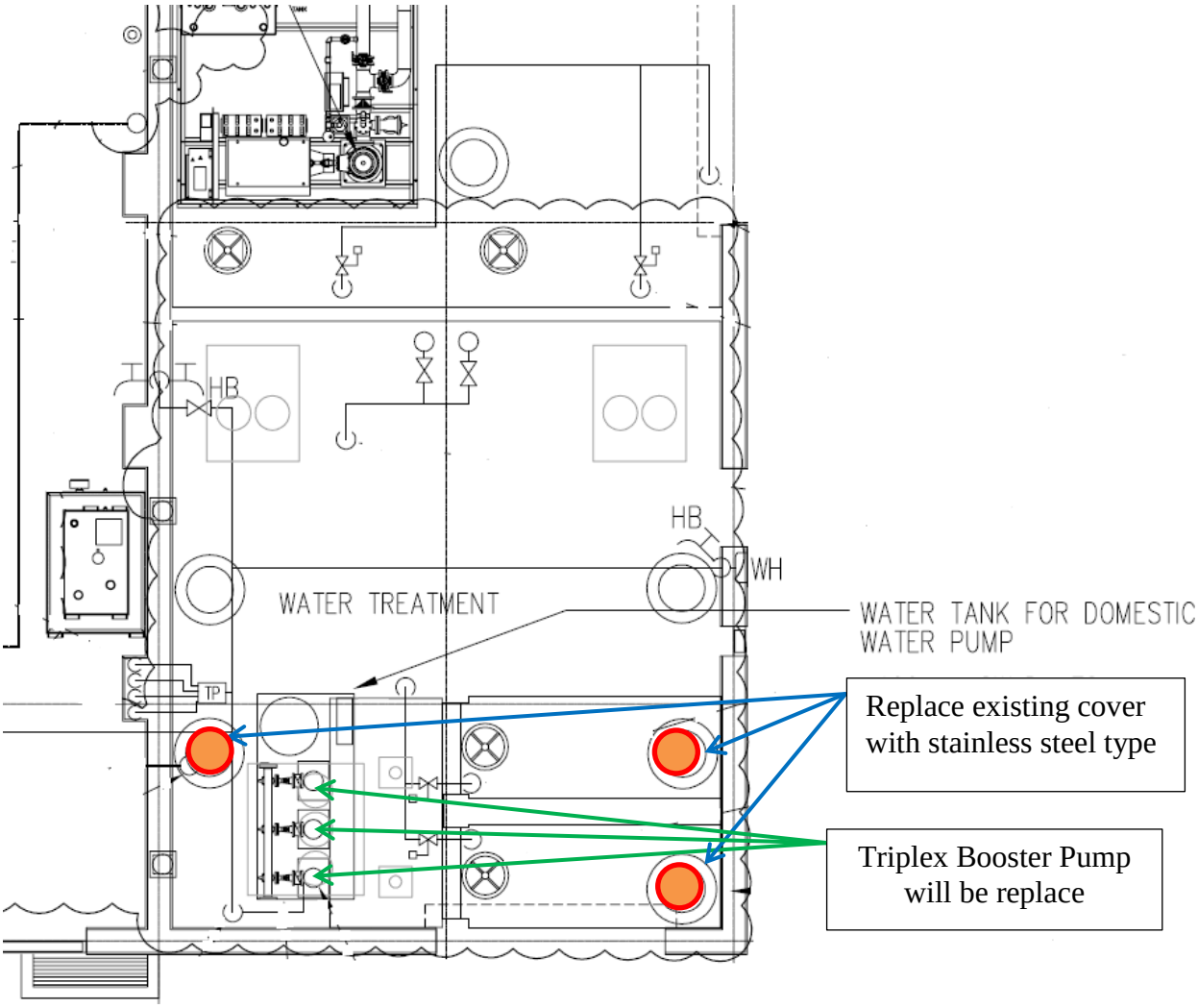

Existing Triplex Booster Pump

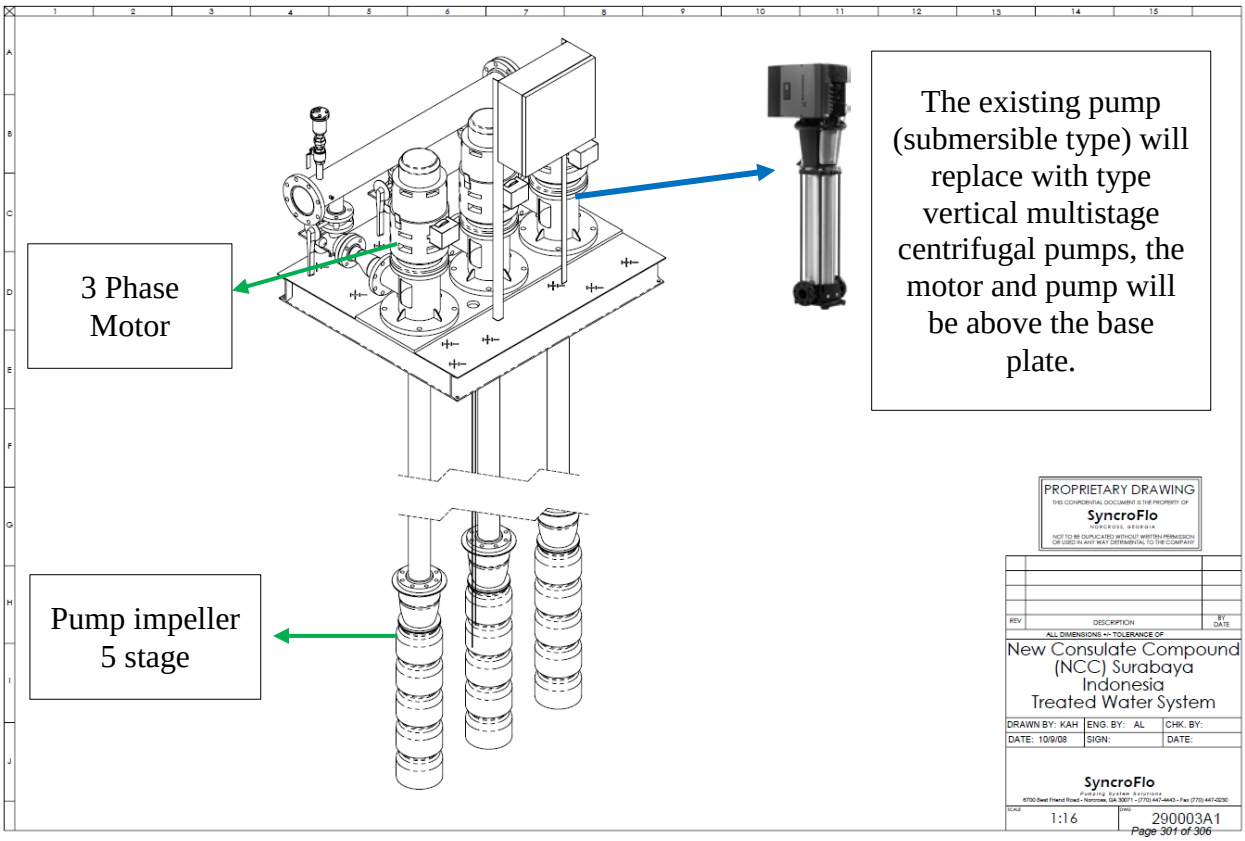

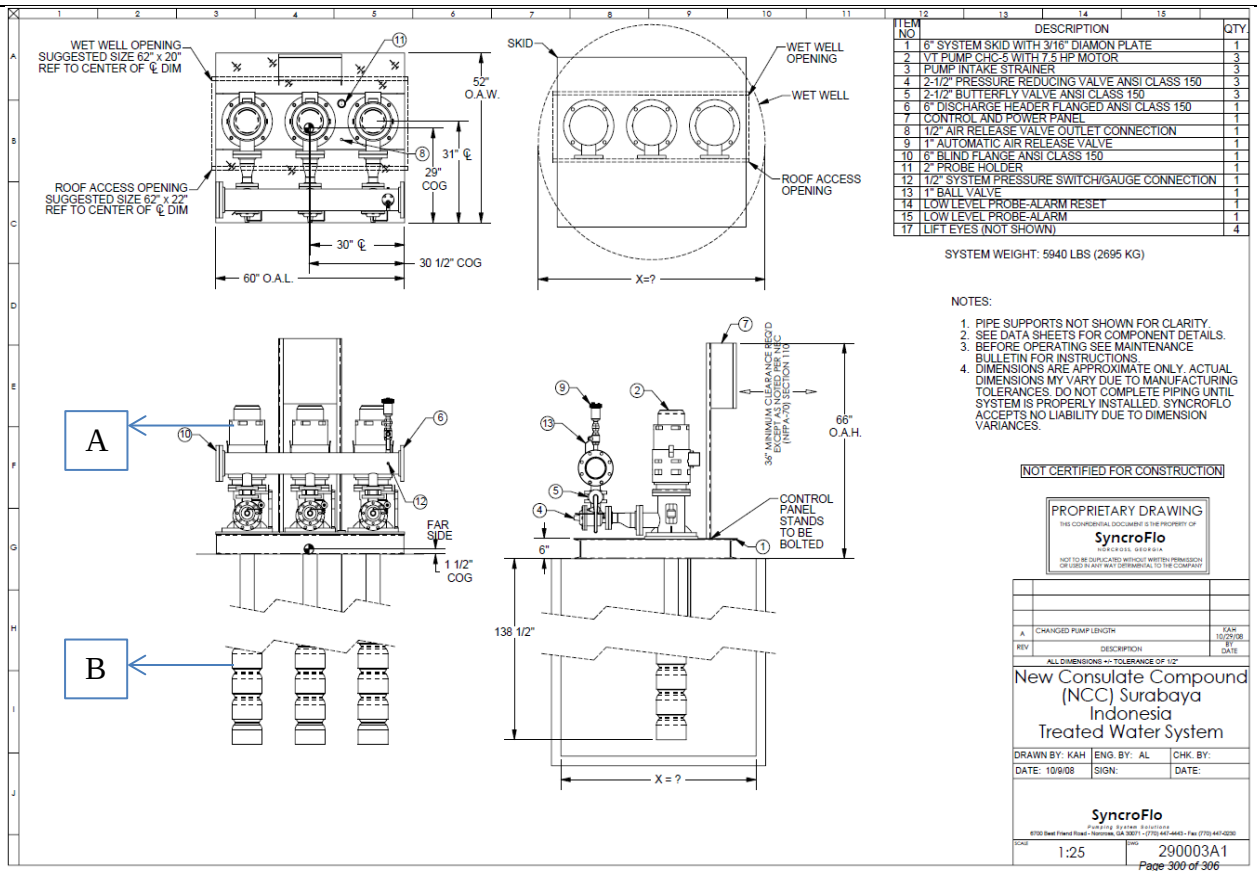

(A) NEW MOTOR SCHEDULE

Phase	Voltage	Power	Motor RPM	Pressure	Quantity	Features	BAS System
3	380	15 Hp	3000 Rpm	76 Psig	3 Units	VFD System	On-Off Status

(B) NEW PUMP SCHEDULE

Flow	Head	Suction	Rpm	Specification	Suct Dia	Disch.Dia	Model	Quantity
120 US Gpm	188 Ft	15 Feet	2875	Made of stain less steel	4”	4”	TBD	3 Units