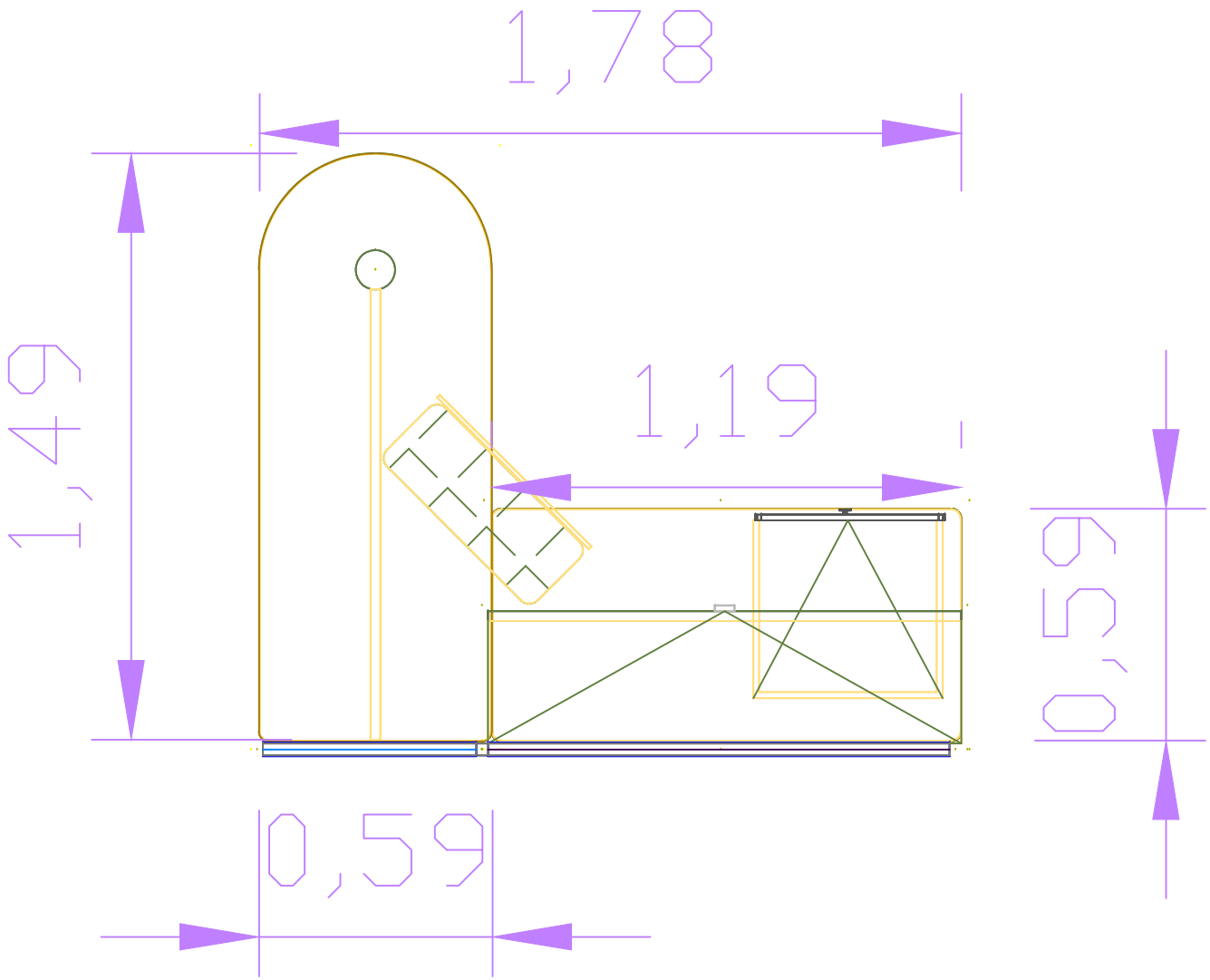

WORK STATION DETAIL