Exhibit E

DRAWING 90501 FLY-SHEET

DELTA JOB NUMBER: 7721A AND 7721B

CUSTOMER: ANIXTER INC.
P.O. 597-599112-431
AMERICAN EMBASSY – LA PAZ, BOLIVIA

DATE: February 17, 2011

THIS FLY-SHEET COVERS JOB SPECIFIC TABULATIONS TO DELTA DRAWING 90501.

	S/N 7721A-HPU AND 7721B-HPU (TWO HYDRAULIC POWER UNITS)
'H' HORSEPOWER @ 'V' MOTOR VOLTAGE:	5 HP @ 380/3/50
'M' MOTOR STOCK NUMBER:	2464-165
B1325 HANDPUMP OPTION:	YES, STOCK NUMBER 2471-21
ACCUMULATOR STOCK NUMBER:	2469-94
ACCUMULATOR PRECHARGE PRESSURE:	1,000 PSIG DRY NITROGEN
B1190/B1191 OIL HEATER OPTION:	B1191, 500 WATTS @ 220 VOLTS
OIL HEATER STOCK NUMBER:	2465-42
B1195/B1196 OIL COOLER OPTION:	NO OIL COOLER
MOTOR STARTER DRAWING NUMBER:	90610-1/F
B1260 DISCONNECT OPTION:	YES, STOCK NUMBER 2531-113
WEIGHT, POUNDS [KILOGRAMS]:	550 POUNDS [250 KG]
HPU ENCLOSURE:	YES, STOCK NUMBER B1218 [WHITE]
WEIGHT IN ENCLOSURE, POUNDS [KG]:	1,615 POUNDS [732 KG]
HPU ENCLOSURE DRAWING:	DWG 90562/A

AS BUILT

COPYRIGHT 2011 DELTA SCIENTIFIC CORPORATION
ALL RIGHTS RESERVED

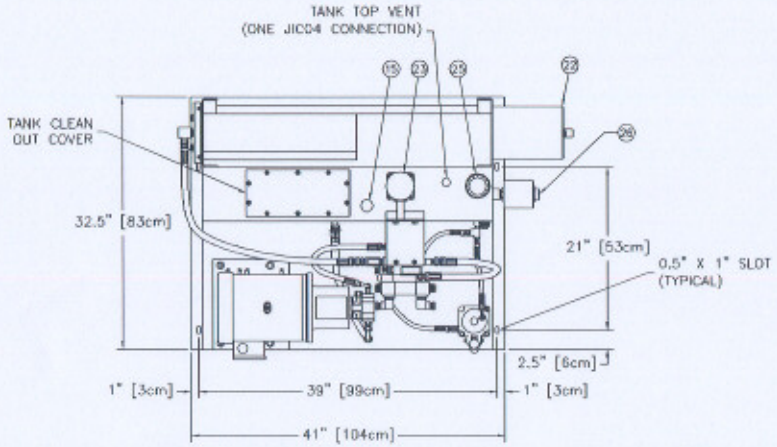

	ITEM	REQ'D	MATERIAL DESCRIPTION	STK. NO.
	01	1	HPU, TANK AND FRAME,	8050-00
	02	1	MOTOR, "H" HP @ "V" (SPECIFIED VOLTAGE),	2464-"M"
	03	1	PUMP/MOTOR ADAPTER, 8.5" AK TO SAE 4 BOLT,	2464-32
	04	1	PUMP HALF COUPLING, 1/2",	2464-53
	05	1	MOTOR HALF COUPLING, 1 1/8",	2464-52
	06	1	COUPLING SPIDER,	2464-61
	07	1	HYD PUMP, 0.258 CU INCH/REV,	2471-27
OPTIONAL	08	0 or 1	HANDPUMP, B1325 OPTION,	2471-21
	09	1	VALVE,SOLENOID, D03, 24 VDC, SPRING DETENTED,	2467-01
	10	1	VALVE, EFO, 24 VDC,	2467-31
	12	1	MANIFOLD, ISO 03, SINGLE STATION	2467-71
	13	1	PRESSURE SWITCH, OFF @ 1900 PSIG/RESET 1400 PSIG	2465-01
	14	1	PRESSURE RELIEF VALVE,	2465-06
	15	1	LEVEL SWITCH,	2465-11
	16	1	PRESSURE GUAGE, 0-3000 PSIG,	2465-21
	17	1	LEVEL GAUGE, 10",	2465-22
	18	1	GAUGE SNUBBER, DELTROL GS205	2465-23
	19	2	VALVE, FLOW CONTROL, 1/2" NPT,	2466-03
	20	1	VALVE, NEEDLE, 1/4" NPT,	2466-11
	21	1	VALVE, BALL, 1/2" NPT, BRONZE,	2466-33B
	22	1	ACCUMULATOR, PISTON TYPE, 5 GALLON,	2469-94
	23	1	FILTER ELEMENT/HOUSING,	2470-02
	24	1	SUCTION STRAINER,	2470-41
	25	1	FILLER BREATHER,	2470-43
OPTIONAL	26	0 or 1	TANK HEATER, B1190 or B1191 OPTION	2465-xx
OPTIONAL	27	0 or 1	OIL RESERVOIR COOLER (AIR), B1196 OPTION	2465-xx
OPTIONAL	28	0 or 1	OIL COOLER, WATER COOLED, B1195 OPTION	2465-52
OPTIONAL	29	0 or 1	OIL COOLER WATER THERMOSTAT, B1195 OPTION	2465-53
	30	1	MOTOR STARTER, CONTROL CIRCUIT	906xx
OPTIONAL	31	0 or 1	DISCONNECT SWITCH, B1260 OPTION	2531-110

TOTAL WEIGHT = 550 POUNDS [250 KG]

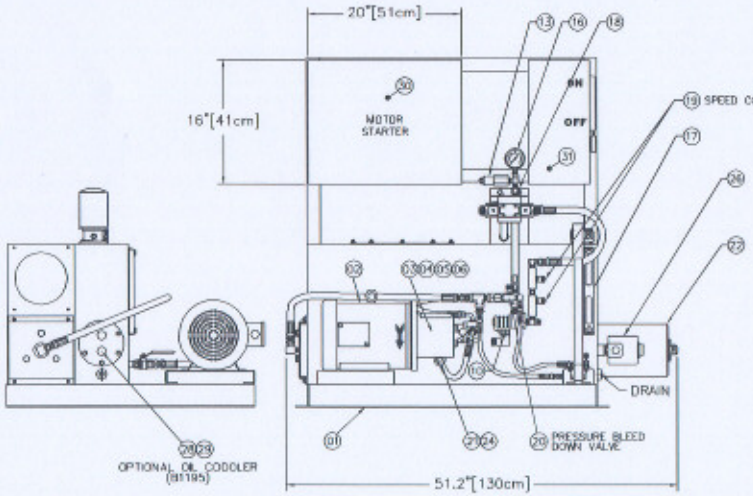

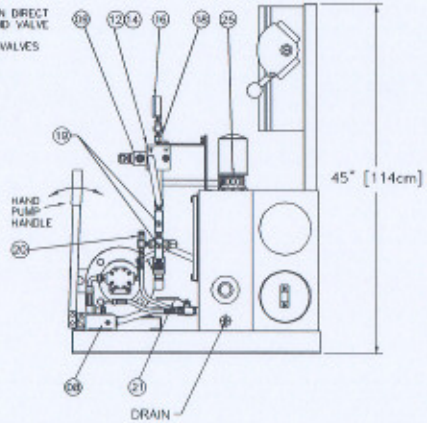

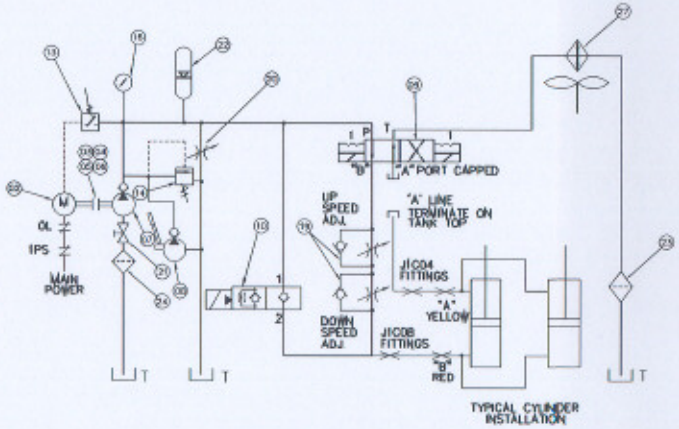

TYPICAL CYLINDER INSTALLATION

TYPICAL HYDRAULIC FLOW SCHEMATIC

REV.	DESCRIPTION	DRAWN BY	DATE	APPROVED BY	DATE
C	ECO #2003-81	JAF	06/05/03		
B	REDRAWN FOR CLARITY	JAF	06/11/01		
A	ADDED B1195 OPTION	JAF	01/22/98		

DELTA SCIENTIFIC CORPORATION
45338 DELTA LANE
PALMDALE, CA 93551 U.S.A.
(661) 575-1100 FAX (661) 575-1138

DELTA HYDRAULIC POWER UNIT
GENERAL ARRANGEMENT

DRAWN BY JAF 06/05/03 | CHKD BY | APVD BY | DATE | DRAWING NO. 90501 | REV. C | SCALE 1/8 (D SIZE) | SHEET SHEET 1 OF 1

UNLESS OTHERWISE NOTED DIMENSIONS ARE IN INCHES

TOLERANCES
.X = ±0.030/.01
.XX = ±0.030/.01
.XXX = ±0.010/.01
ANGLES = ±.5°

SURFACE FINISH 125

REMOVE ALL BURRS & BREAK SHARP EDGES .02 MAX

© 1990 ALL RIGHTS RESERVED

ITEM	REQ'D	DESCRIPTION	STK. NO.	WEIGHT
01	1	B1218 HPU ENCLOSURE ASSEMBLY	7436-00	1065 POUNDS
02	1	HYDRAULIC POWER UNIT	905xx	xxxx POUNDS
			TOTAL WT:	xxxx POUNDS

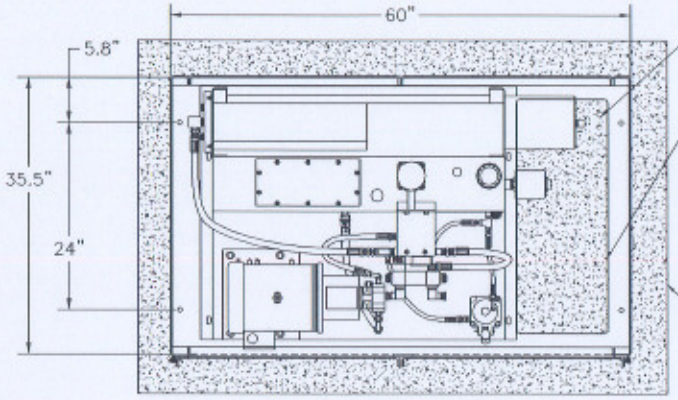

PLAN VIEW (ROOF REMOVED)

OVERHEAD INFRINGEMENT IN STUB-UP AREA

STUB-UP AREA – 6.5 [165] x 31.0 [787]
KEEP THIS AREA AVAILIBLE FOR
CONDUIT ENTERING/LEAVING HPU

3.0 INCH IPS SCH. 40 PVC
(OR EQUIVALENT) – ONE REQUIRED PER BARRIER OR BOLLARD
* ALTERNATE HYDRAULIC:
RIGID STEEL PIPE MAY BE
SUBSTITUTED FOR HOSE/PVC
CONDUIT SYSTEM

ELECTRICAL CONDUIT:
(1 EA) – PER BARRIER OR BOLLARD LIMIT SWITCH
(1) – MAIN POWER FEED
(1 EA) – PER BARRIER OR BOLLARD HEATER (OPTIONAL)
(1 LOT) – CONTROL CONDUIT AS REQUIRED

ALL SUPPLIED BY INSTALLING CONTRACTOR

CONCRETE FOUNDATION
(CUSTOMER FURNISHED)

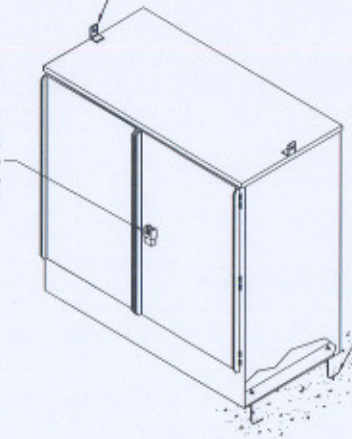

ENCLOSURE ATTACHMENT NOTES:

5/16" LEG ANCHOR BOLT
4 REQUIRED
* ALTERNATE LAG SCREW/LAG SCREW SHIELD
/MASONRY ANCHOR/
ALL INSTALLER SUPPLIED

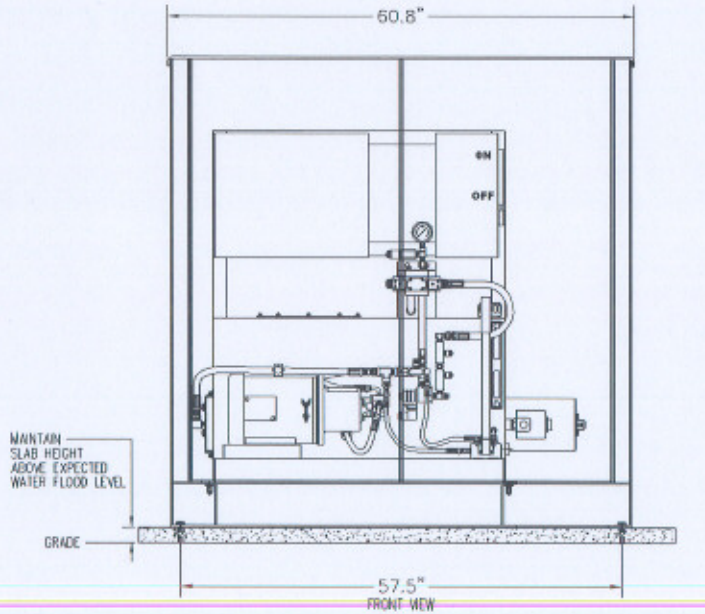

FRONT-VIEW

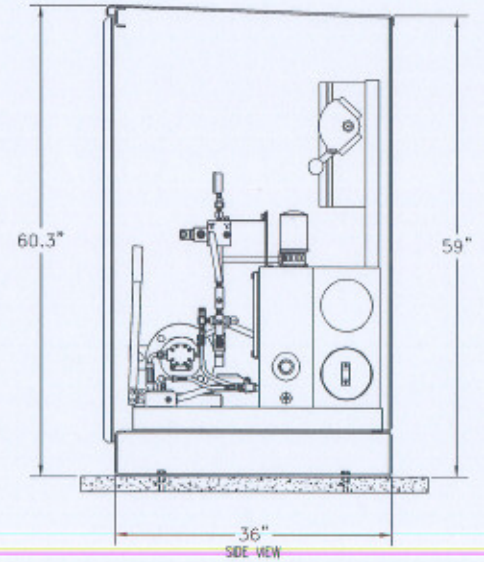

SIDE-VIEW

NOTES:

1) COVER IS 0.25 INCH THICK MILD STEEL.
2) FURNISHED STANDARD SHOP PRIMER (GRAY)
FINISH COAT – INDUSTRIAL ENAMEL (WHITE)
3) PADLOCK FURNISHED BY OTHERS
4) AREA UNDER HPU SKID REPRESENTS
OIL DRIP PAN, 35" X 45" X 6" DEEP.
5) MAXIMUM HPU HEIGHT IS 53 INCHES.

© 2002
ALL RIGHTS RESERVED

UNLESS OTHERWISE NOTED DIMENSIONS ARE IN INCHES

TOLERANCES
.X = ±.060/YT
.XX = ±.030/YT
.XXX = ±.010/YT
ANGLES = ±.5°

SURFACE FINISH
125/

REMOVE ALL BURRS & BREAK SHARP EDGES .02 MIN

DELTA SCIENTIFIC CORPORATION
40395 DELTA LANE
PALMDALE, CA 93551 U.S.A.
(661) 575-1103 FAX (661) 575-1180

DELTA

B1218, FORCE RESISTANT HEAVY DUTY HPU
ENCLOSURE, 1/4" PLATE CONSTRUCTION

DRAWN BY	DATE	DRAWING NO.	REV.
RUSSOMANO	10/12/00	90562	–
CHKD BY	DATE		
APPVD BY	DATE	SCALE: 1:8 (D SIZE)	SHEET 1 OF 1

MAIN DIRECTION CONTROL VALVE
(ON MANIFOLD)

HANDPUMP
(ON POWER UNIT BASE)

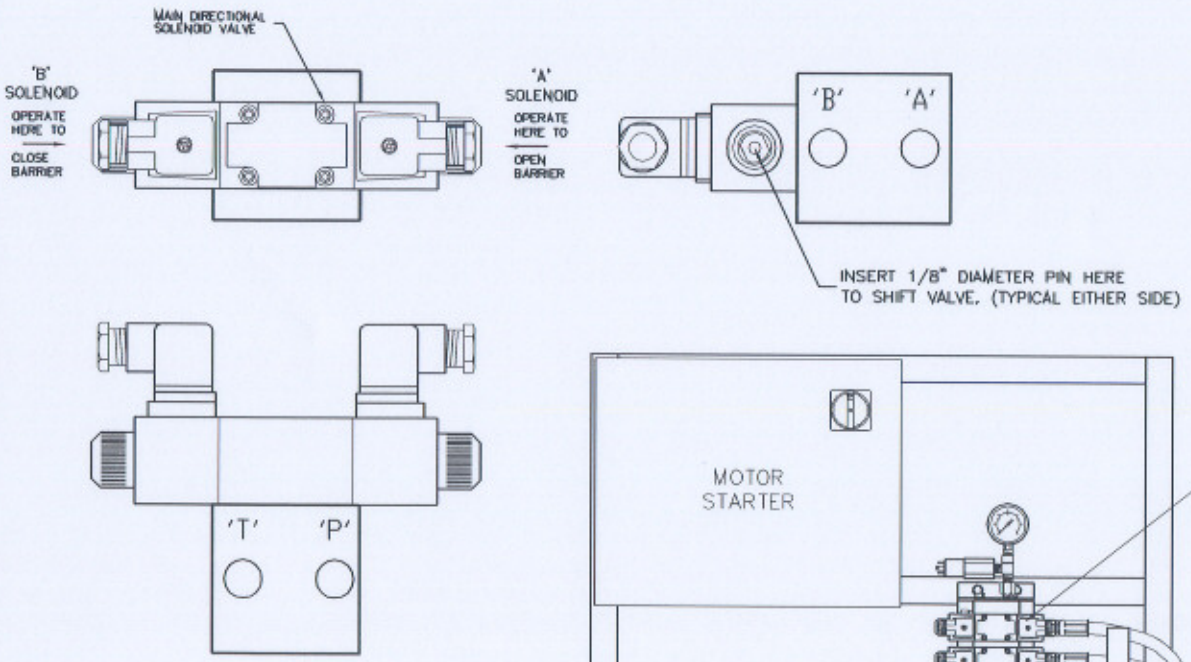

VALVE SYMBOL

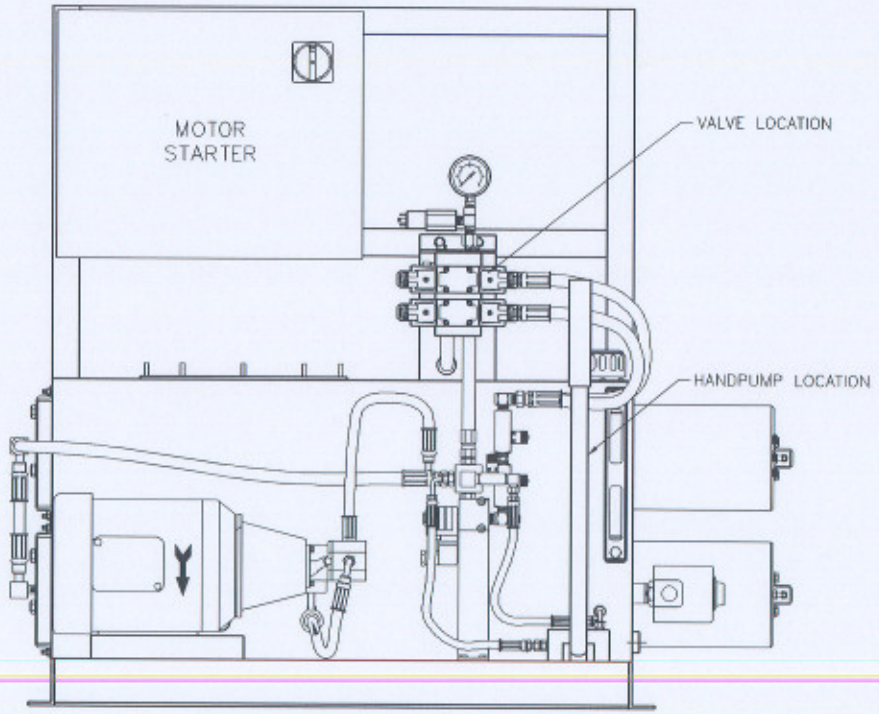

FRONT ELEVATION

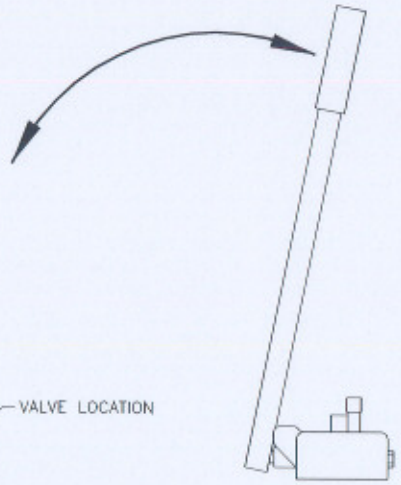

MANUAL OPERATION INSTRUCTIONS:

1) SHIFT VALVE FROM LEFT TO CLOSE OR FROM RIGHT TO OPEN THE BARRIER.

2) OPERATE THE HANDPUMP UNTIL BARRIER IS IN THE DESIRED POSITION.

REV.	DESCRIPTION	DRWN BY	DATE	APPVD BY	DATE
A	ECO #2005-42	JHF	01/21/05		

DELTA SCIENTIFIC CORPORATION
40355 DELTA LANE
PALMDALE, CA 93551 U.S.A.

MANUAL OPERATION INSTRUCTIONS
DELTA - SOLENOID VALVE AND HANDPUMP

DRAWN BY: J.FRIEND
DATE: 08/29/01
CHKD BY
DATE
APPVD BY
DATE
DRAWING NO. 90520
REV. A
SCALE: N.T.S.
SHEET 1 OF 1

MAIN DIRECTION CONTROL VALVES
(ON MANIFOLD)

3-B

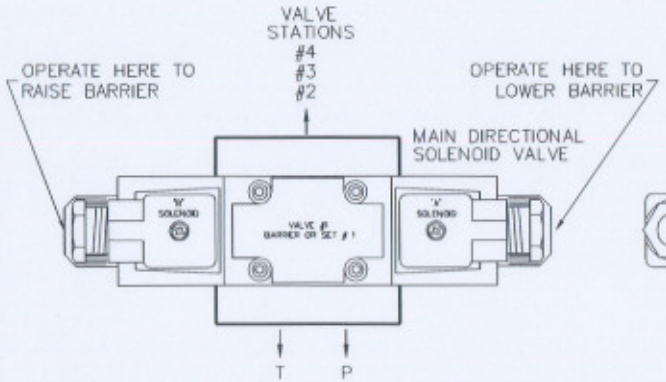

ELEVATION

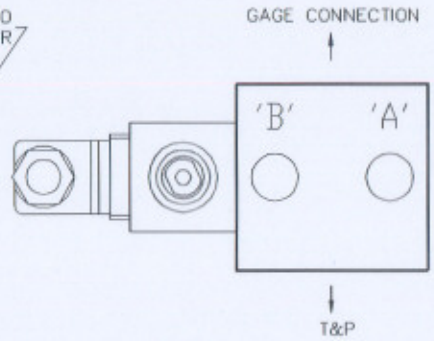

RIGHT ELEVATION

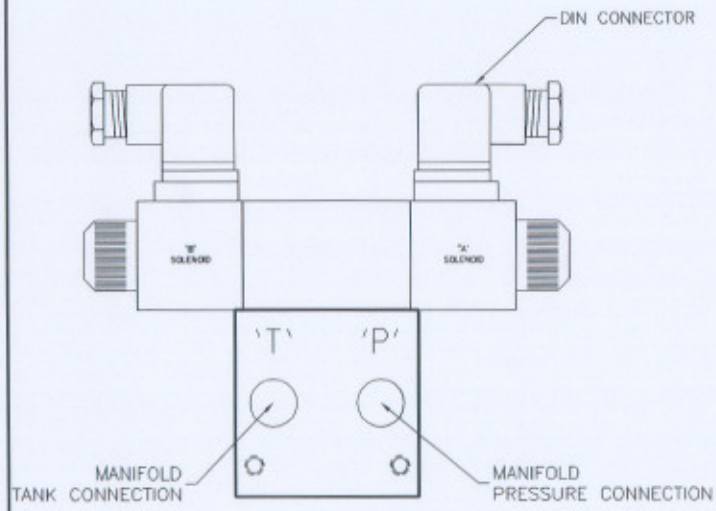

BOTTOM VIEW SHOWNING PRESSURE AND TANK CONNECTIONS

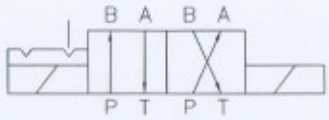

VALVE SYMBOL

SINGLE ACTING

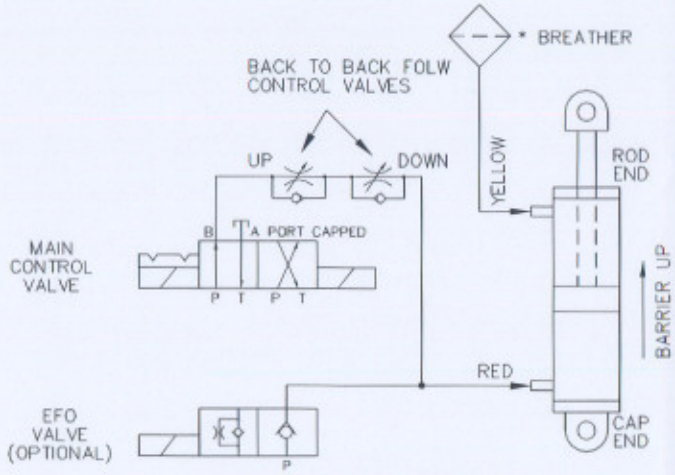

ADJUST UP SPEED AS DESIRED
ADJUST DOWN SPEED AS DESIRED

* BREATHER OR ALTERNATELY CONNECTED TO HPU TANK TOP

SPEED CONTROL VALVE

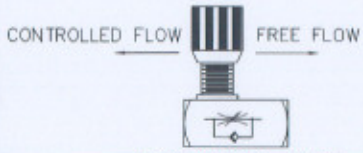

FLOW CONTROL VALVE

CLOCKWISE IS SLOWER
COUNTER CLOCKWISE IS FASTER

DELTA SCIENTIFIC CORPORATION
VALVE CONNECTION DIAGRAM
BACK TO BACK FLOW CONTROL/S.A.
DRAWN BY D.S.
DATE 04/27/98
DRAWING NO. 90406
REV. —
SCALE FULL (D SIZE)
SHEET SHEET 1 OF 1