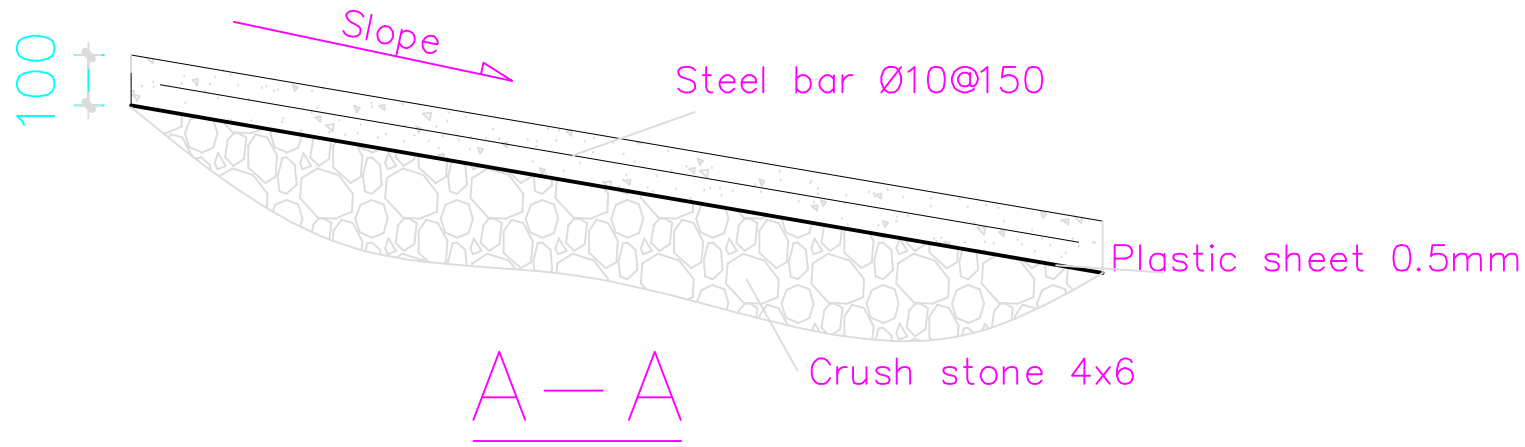

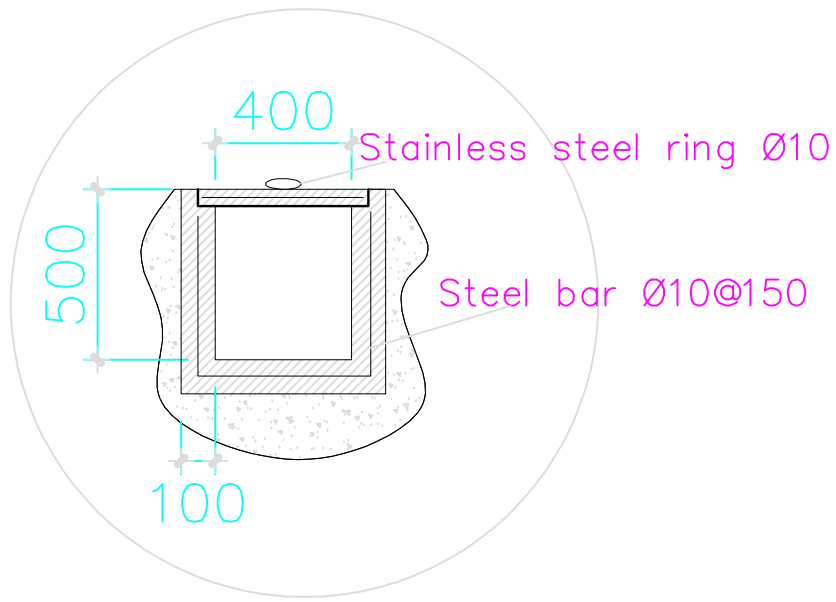

NEW HANDHOLE 400x400 DETAIL