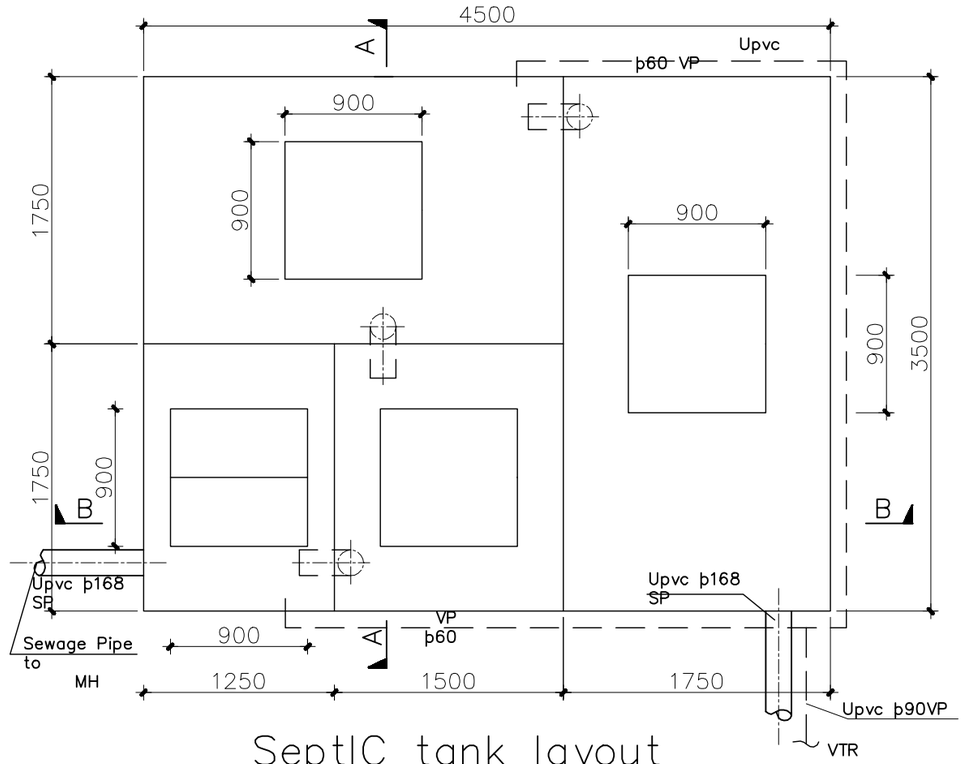

SeptIC tank layout

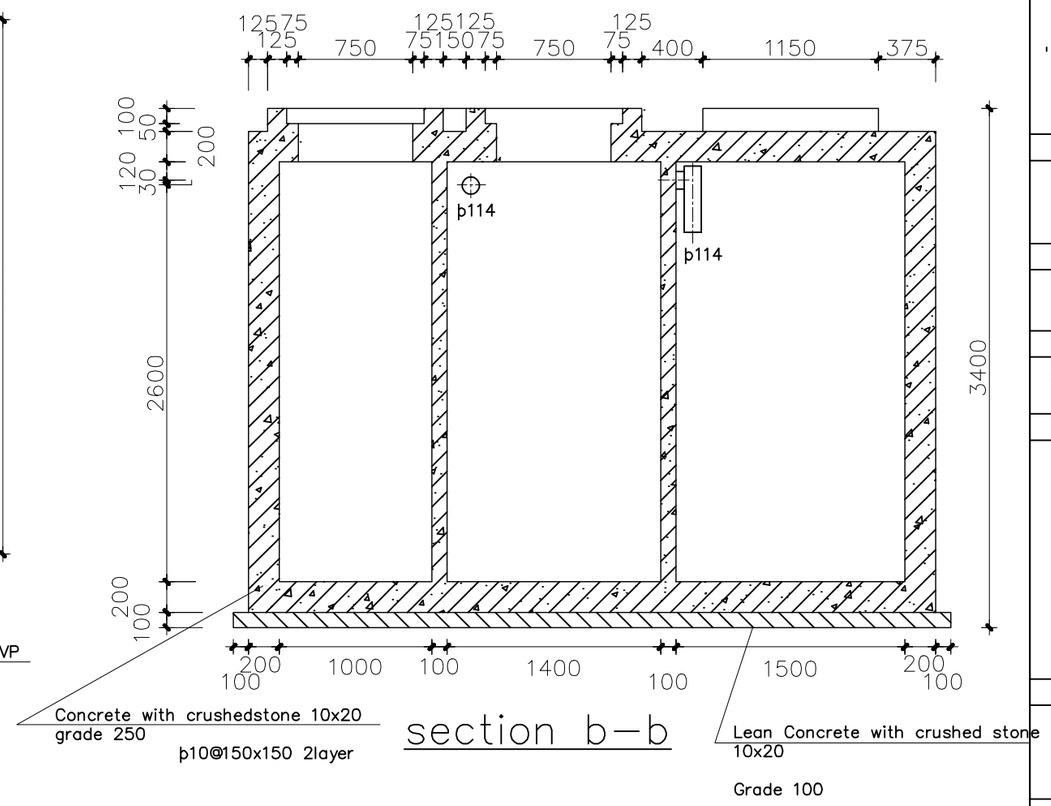

section b–b

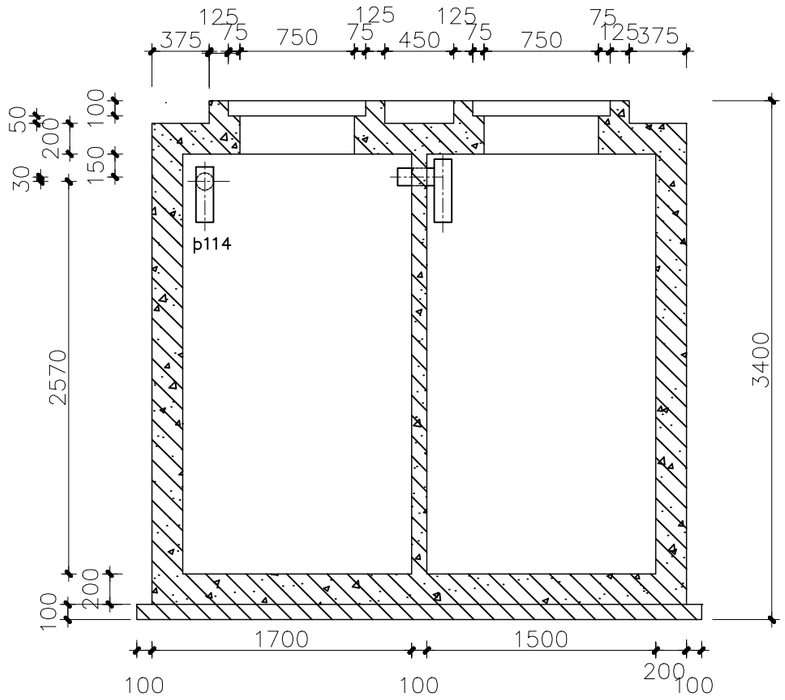

Section a–a

U.S CONSULATE GENERal
hochiminh city

PROJECT

ITEM

SITE LOCATION

07 MAC DINH CHI St., DIST 1
HOCHIMINH CITY

DRAFTER

Septictank detail

DWG SYMBOL

PL 2/2

DATE

Aug, 2014