U.S. DEPARTMENT OF STATE

Embassy Mic System
Port Au Prince, Haiti
Non Immigrant Visa - 25

DRAWING INDEX:

SHT. #	SHEET/ DESCRIPTION:	REVISIONS:	DATE:		BY:
CVR	COVER SHEET				
AV1.0	LAYOUT				
AV2.0	ELEVATIONS & SECTION				
AV2.1	AUDIX GS1 MICROPHONE DETAIL				
AV3.0	WINDOW SYSTEM DIAGRAM - 1 OF 6				
AV3.1	WINDOW SYSTEM DIAGRAM - 2 OF 6				
AV3.2	WINDOW SYSTEM DIAGRAM - 3 OF 6				
AV3.3	WINDOW SYSTEM DIAGRAM - 4 OF 6				
AV3.4	WINDOW SYSTEM DIAGRAM - 5 OF 6				
AV3.5	WINDOW SYSTEM DIAGRAM - 6 OF 6				
AV4.0	CISCO SWITCH DETAIL				
AV5.0	CRESTRON DETAIL				
AV6.0	POWER WIRING PLAN				
AV7.0	WIRE DETAILS				
AV8.0	RACK ELEVATION				
AV9.0	WIRE RUNS LIST - 1 OF 3				
AV9.1	WIRE RUNS LIST - 2 OF 3				
AV9.2	WIRE RUNS LIST - 3 OF 3				

GENERAL PROJECTION SYSTEMS

707 PLATINUM POINT, SUITE 2001
LAKE MARY, FL 32746
PHONE 407-936-7300
FAX 407-833-4990

Date	Revisions	By

707 Platinum Point, Suite 2001
Lake Mary, FL 32746
Phone - (407)936-7300
Fax (407)833-4990
www.genproj.com
solutions@genproj.com

GENERAL PROJECTION SYSTEMS

COVER SHEET

U.S. DEPARTMENT OF STATE
(NIV) Port Au Prince, Haiti

DRAWN BY: GUS
ENGINEERED BY: VA
DATE DRAWN: JUNE 13, 2014
SCALE: AS NOTED
PROGRAMMING: CS
DRAWING NO.: CVR

General Projection Systems Inc. hereby reserves its common law copyrights and other copyrights in these plans, ideas, and designs. These ideas, designs and plans are not to be copied or changed in any manner or form whatsoever, nor are they to be assigned to any third party without first obtaining the express written permission from General Projection Systems Inc.

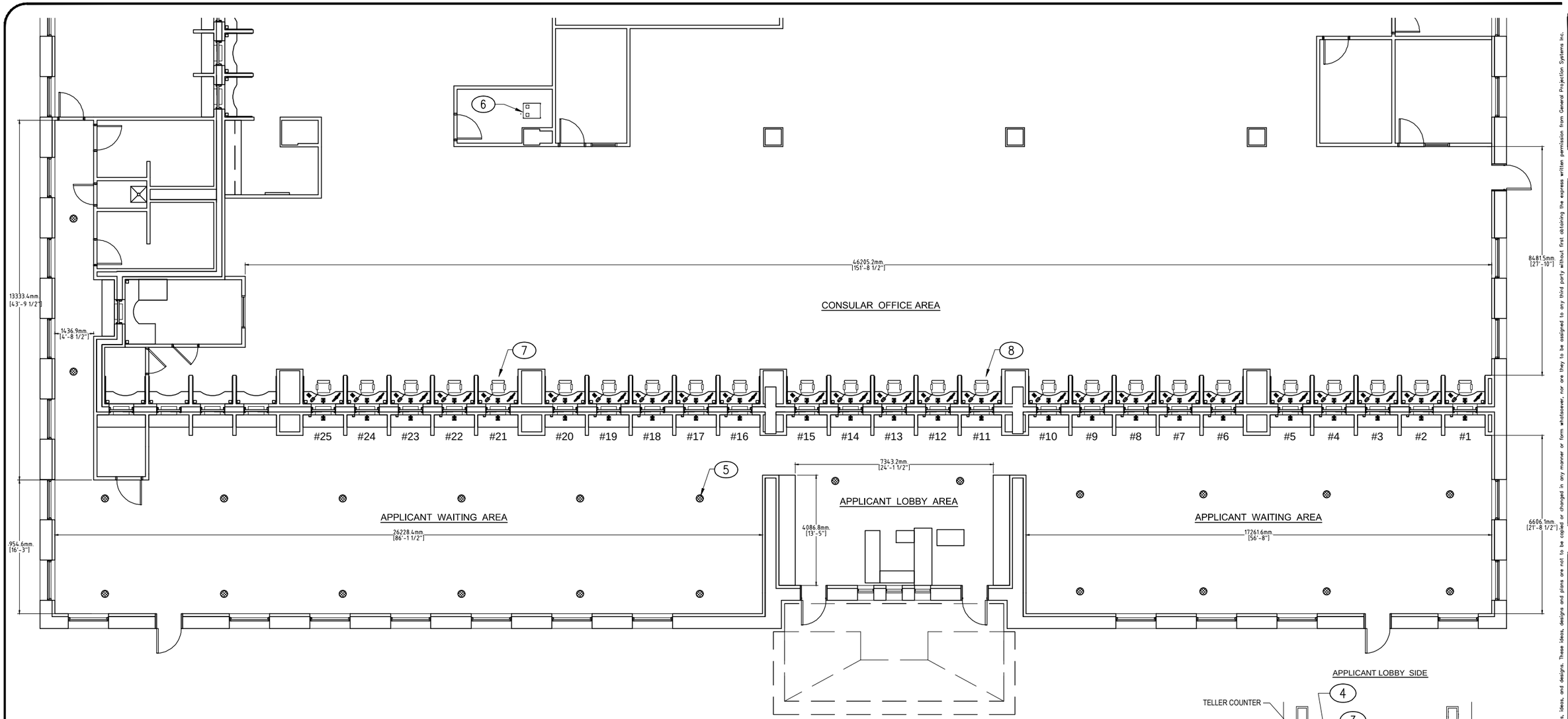

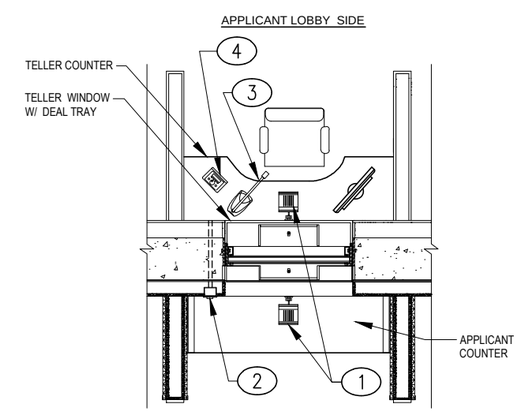

1 / AV1.0 TYPICAL CONSULAR TELLER WINDOW ENLARGED PLAN VIEW

(SEE AV2.0 FOR TYPICAL ELEVATIONS & SECTION)

EQUIPMENT NOTES:

1. JBL CSS–1S/T SPEAKER, WALL–MOUNTED. (TYP. 50)
2. AUDIX GS1 CUSTOM BOUNDARY MICROPHONE MOUNTED ON WALL AT EXISTING CONDUIT. (TYP. 25, APPLICANT SIDE)
3. BIAMP NPS–1 GOOSENECK MICROPHONE WITH BASE. (TYP. 25, CONSULAR SIDE)
4. CRESTRON APAD CONTROL PANEL IN RCI CUSTOM BOX W/ CONNECTION FOR SHURE SM10A–CN HEADSET BOOM MICROPHONE. (TYP. 25, CONSULAR SIDE)
5. JBL CONTROL 24CT MICRO PAGING SPEAKER, SURFACE–MOUNTED IN CEILING. (TYP. OF 24, APPLICANT LOBBY & WAITING AREA)
6. MIDDLE ATLANTIC WRK375SA–32/MW–LVT EQUIPMENT RACK.
7. CRESTRON C2N–HBLOCK #1 MOUNTED IN CEILING ABOVE WINDOW #21.
8. CRESTRON C2N–HBLOCK #2 MOUNTED IN CEILING ABOVE WINDOW #11.

✳ NOTE:

FIELD DETERMINE BEST MOUNTING LOCATION FOR EQUIPMENT RACK, LOBBY PAGING SPEAKERS AND WALL–MOUNTED EQUIPMENT AT WINDOW BOOTHS.

G.F.E. = GOVERNMENT FURNISHED EQUIPMENT

Date	Revisions	By

707 Platinum Point, Suite 2001
Lake Mary, FL 32746
Phone - (407)936-7300
Fax (407)833-4990
www.genproj.com
solutions@genproj.com

GENERAL PROJECTION SYSTEMS

LAYOUT

U.S. DEPARTMENT OF STATE
(NIV) Port Au Prince, Haiti

DRAWN BY	GUS
ENGINEERED BY	VA
DATE DRAWN	JUNE 13, 2014
SCALE	AS NOTED
PROGRAMMING	CS
DRAWING NO.	AV1.0

General Projection Systems Inc. hereby reserves its common law copyrights and other copyrights in these plans, ideas, and designs. These ideas, designs and plans are not to be copied or changed in any manner or form whatsoever, nor are they to be assigned to any third party without first obtaining the express written permission from General Projection Systems Inc.

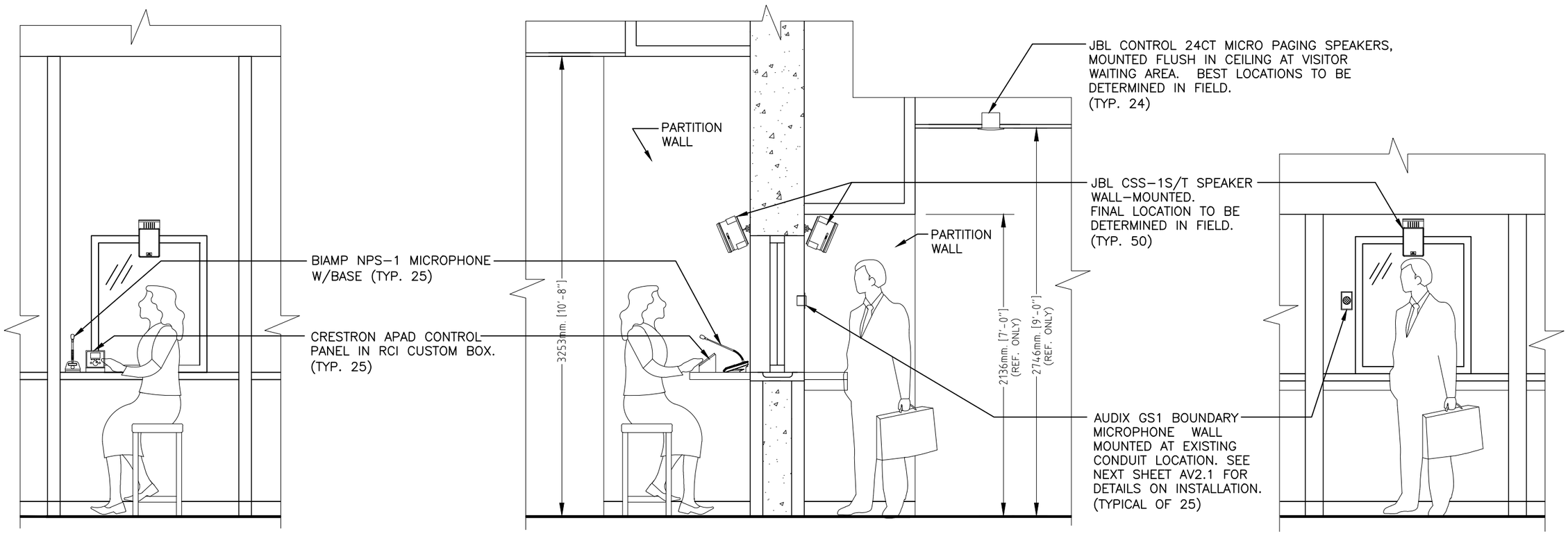

TYPICAL TELLER WINDOW - CONSULAR SIDE ELEVATION

TYPICAL TELLER WINDOW SECTION

TYPICAL TELLER WINDOW - APPLICANT SIDE ELEVATION

Date	Revisions	By

707 Platinum Point, Suite 2001
Lake Mary, FL 32746
Phone - (407)936-7300
Fax (407)833-4990
www.genproj.com
solutions@genproj.com

GENERAL PROJECTION SYSTEMS

ELEVATIONS & SECTION

U.S. DEPARTMENT OF STATE
(NIV) Port Au Prince, Haiti

DRAWN BY	GUS
ENGINEERED BY	VA
DATE DRAWN	JUNE 13, 2014
SCALE	AS NOTED
PROGRAMMING	GS
DRAWING NO.	AV2.0

General Projection Systems Inc. hereby reserves its common law copyrights and other copyrights in these plans, ideas, and designs. These ideas, designs and plans are not to be copied or changed in any manner or form whatsoever, nor are they to be assigned to any third party without first obtaining the express written permission from General Projection Systems Inc.

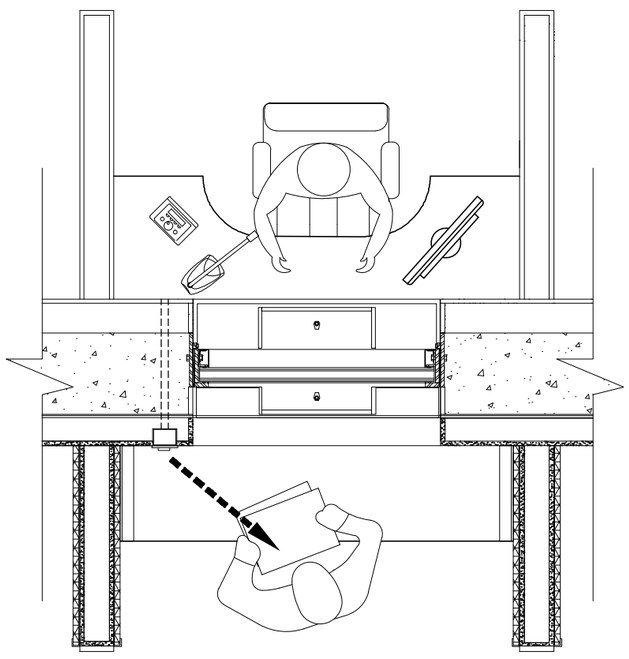

TYPICAL TELLER WINDOW VISITOR SIDE PLAN

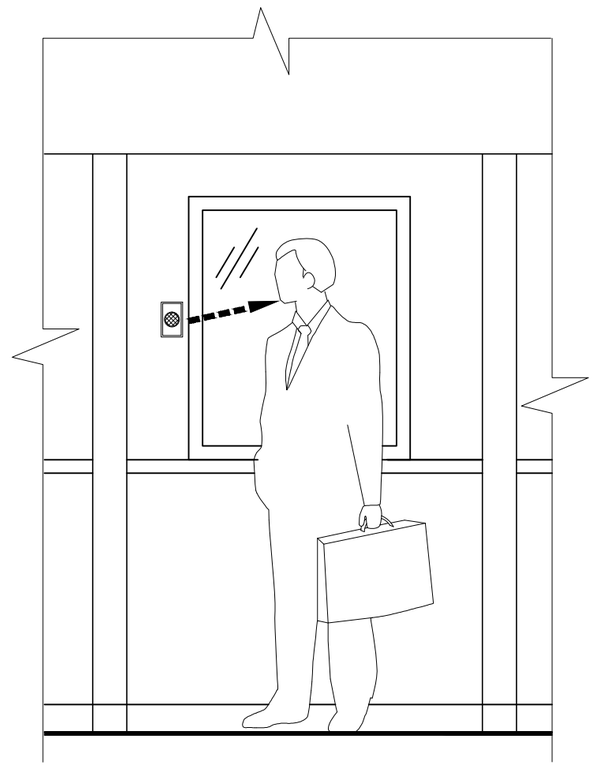

TYPICAL TELLER WINDOW VISITOR SIDE ELEVATION

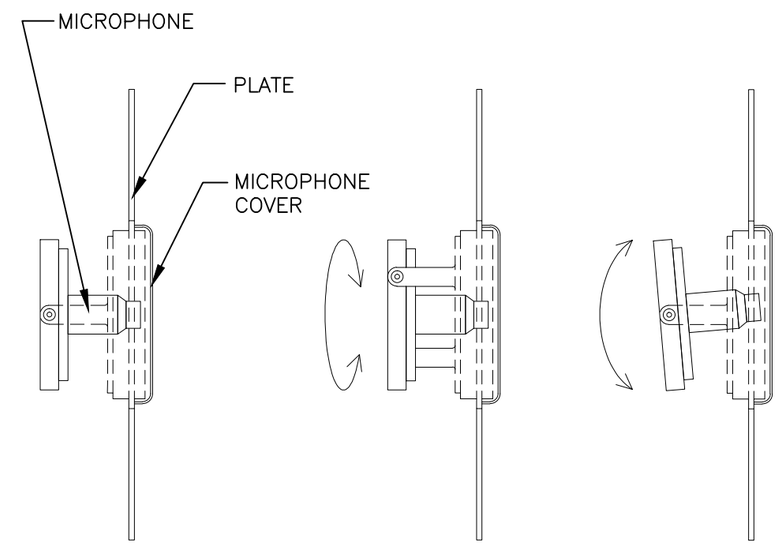

STARTING POSITION

TURNS 360°

PIVOTS UP & DOWN

AUDIX GS1 BOUNDARY MICROPHONE–
SIDE VIEW DETAIL

IMPORTANT NOTICE:

THE AUDIX GS1 CUSTOM BOUNDARY MICROPHONE IS ADJUSTABLE. MAKE SURE IT IS ADJUSTED TO AIM TO VISITOR, BY TURNING AND PIVOTING THE MICROPHONE TO DESIRED POSITION, BEFORE PERMANENTLY MOUNTING IN WALL. SEE DETAIL, THIS PAGE.

Date	Revisions	By

GENERAL PROJECTION SYSTEMS
707 Platinum Point, Suite 2001
Lake Mary, FL 32746
Phone - (407)936-7300
Fax (407)833-4990
www.genproj.com
solutions@genproj.com

Audix GS1 Microphone Detail

U.S. DEPARTMENT OF STATE
(NIV) Port Au Prince, Haiti

DRAWN BY: GUS
ENGINEERED BY: VA
DATE DRAWN: JUNE 13, 2014
SCALE: AS NOTED
PROGRAMMING: CS
DRAWING NO.: AV2.1

General Projection Systems Inc. hereby reserves its common law copyrights and other copyrights in these plans, ideas, and designs. These ideas, designs and plans are not to be copied or changed in any manner or form whatsoever, nor are they to be assigned to any third party without first obtaining the express written permission from General Projection Systems Inc.

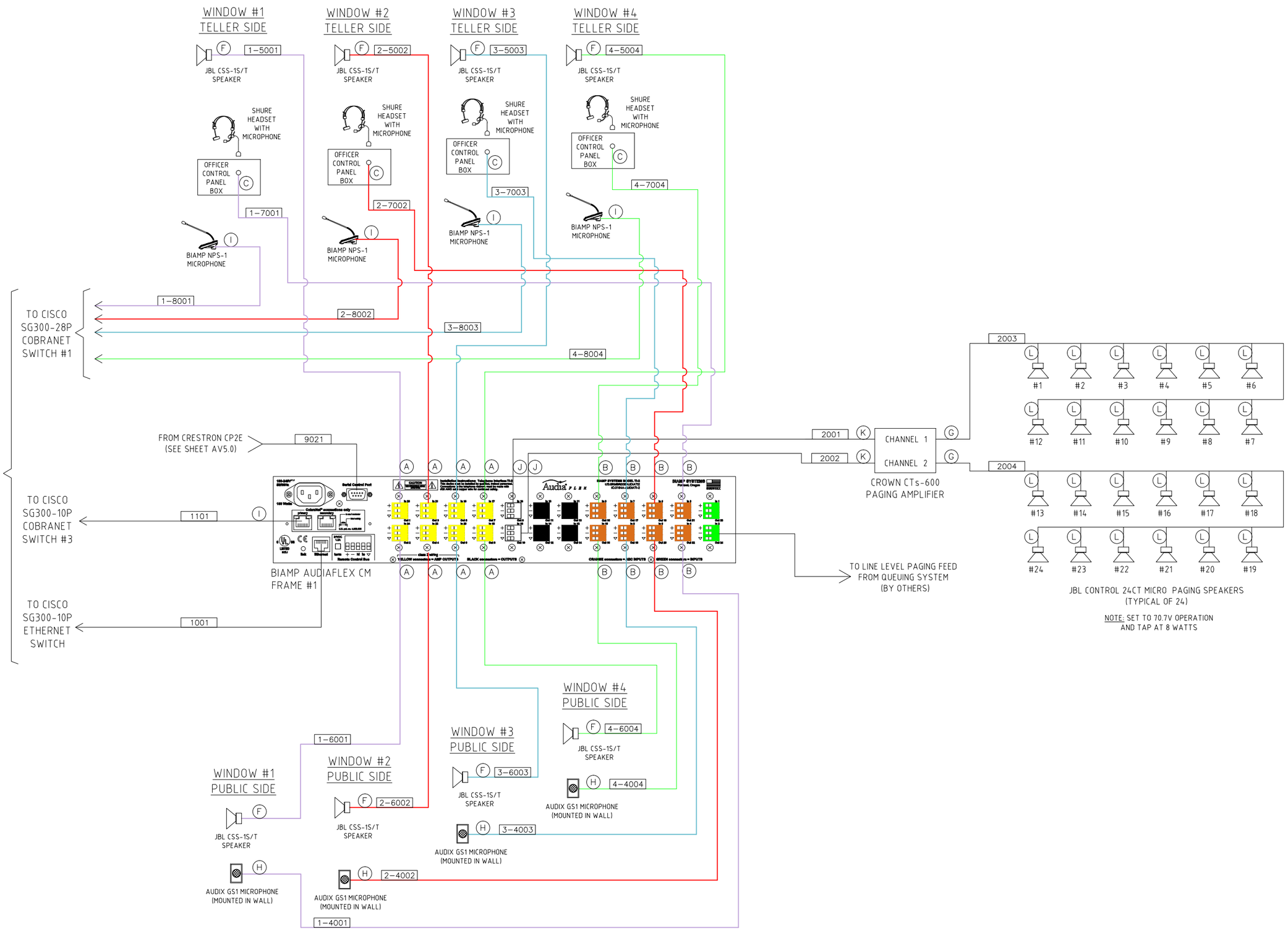

Date	Revisions	By

707 Platinum Point, Suite 2001
Lake Mary, FL 32746
Phone - (407)936-7300
Fax (407)833-4990
www.genproj.com
solutions@genproj.com

GENERAL PROJECTION SYSTEMS

WINDOW SYSTEM - 1 OF 6

U.S. DEPARTMENT OF STATE (NIV) Port Au Prince, Haiti

DRAWN BY	GUS
ENGINEERED BY	VA
DATE DRAWN	JUNE 13, 2014
SCALE	AS NOTED
PROGRAMMING	CS
DRAWING NO.	AV3.0

General Projection Systems Inc. hereby reserves its common law copyrights and other copyrights in these plans, ideas, and designs. These ideas, designs and plans are not to be copied or changed in any manner or form whatsoever, nor are they to be assigned to any third party without first obtaining the express written permission from General Projection Systems Inc.

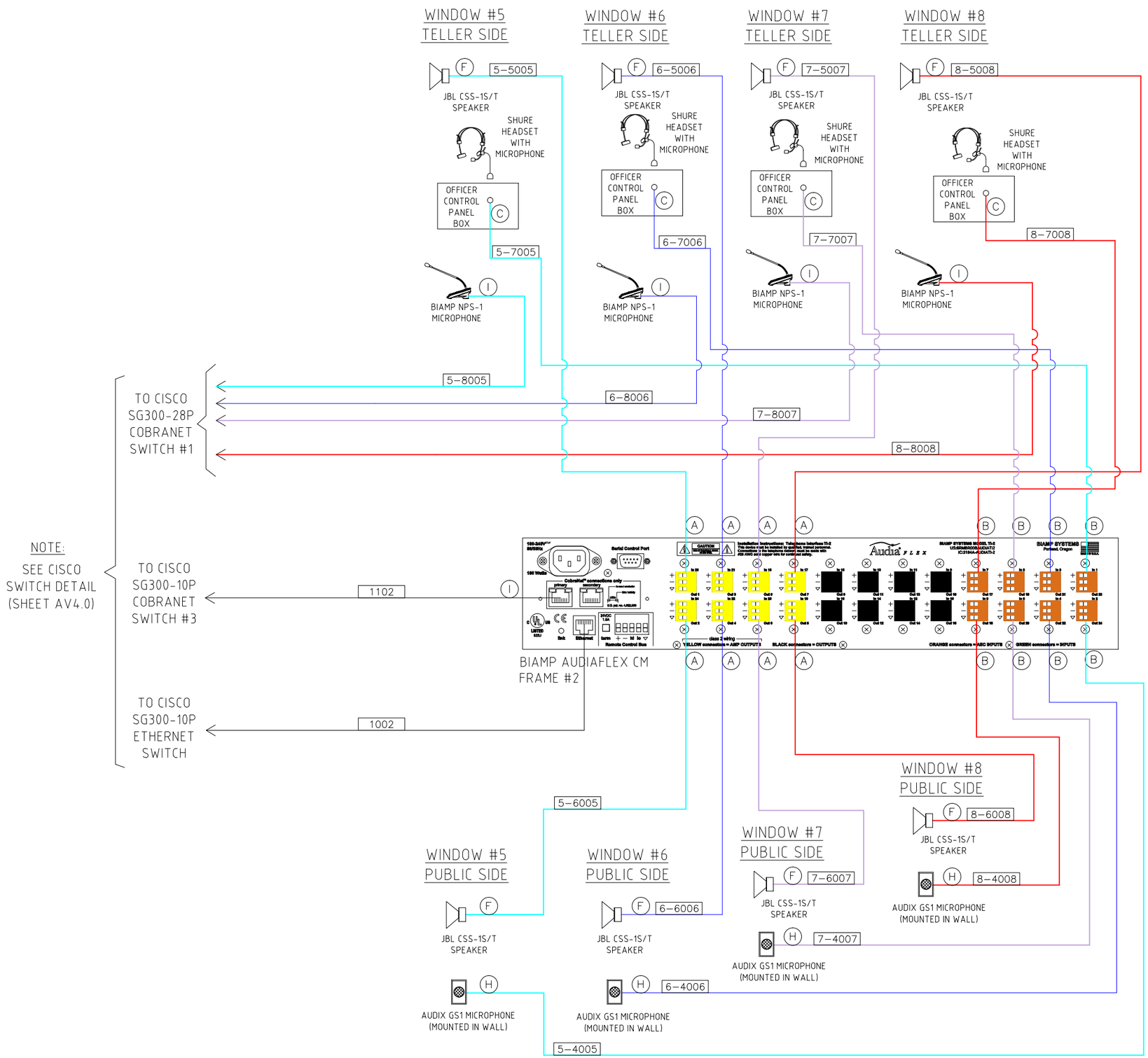

Date	Revisions	By

707 Platinum Point, Suite 2001
Lake Mary, FL 32746
Phone - (407)936-7300
Fax (407)833-4990
www.genproj.com
solutions@genproj.com

GENERAL PROJECTION SYSTEMS

WINDOW SYSTEM - 2 OF 6

U.S. DEPARTMENT OF STATE (NIV) Port Au Prince, Haiti

DRAWN BY	GUS
ENGINEERED BY	VA
DATE DRAWN	JUNE 13, 2014
SCALE	AS NOTED
PROGRAMMING	CS
DRAWING NO.	AV3.1

General Projection Systems Inc. hereby reserves its common law copyrights and other copyrights in these plans, ideas, and designs. These ideas, designs and plans are not to be copied or changed in any manner or form whatsoever, nor are they to be assigned to any third party without first obtaining the express written permission from General Projection Systems Inc.

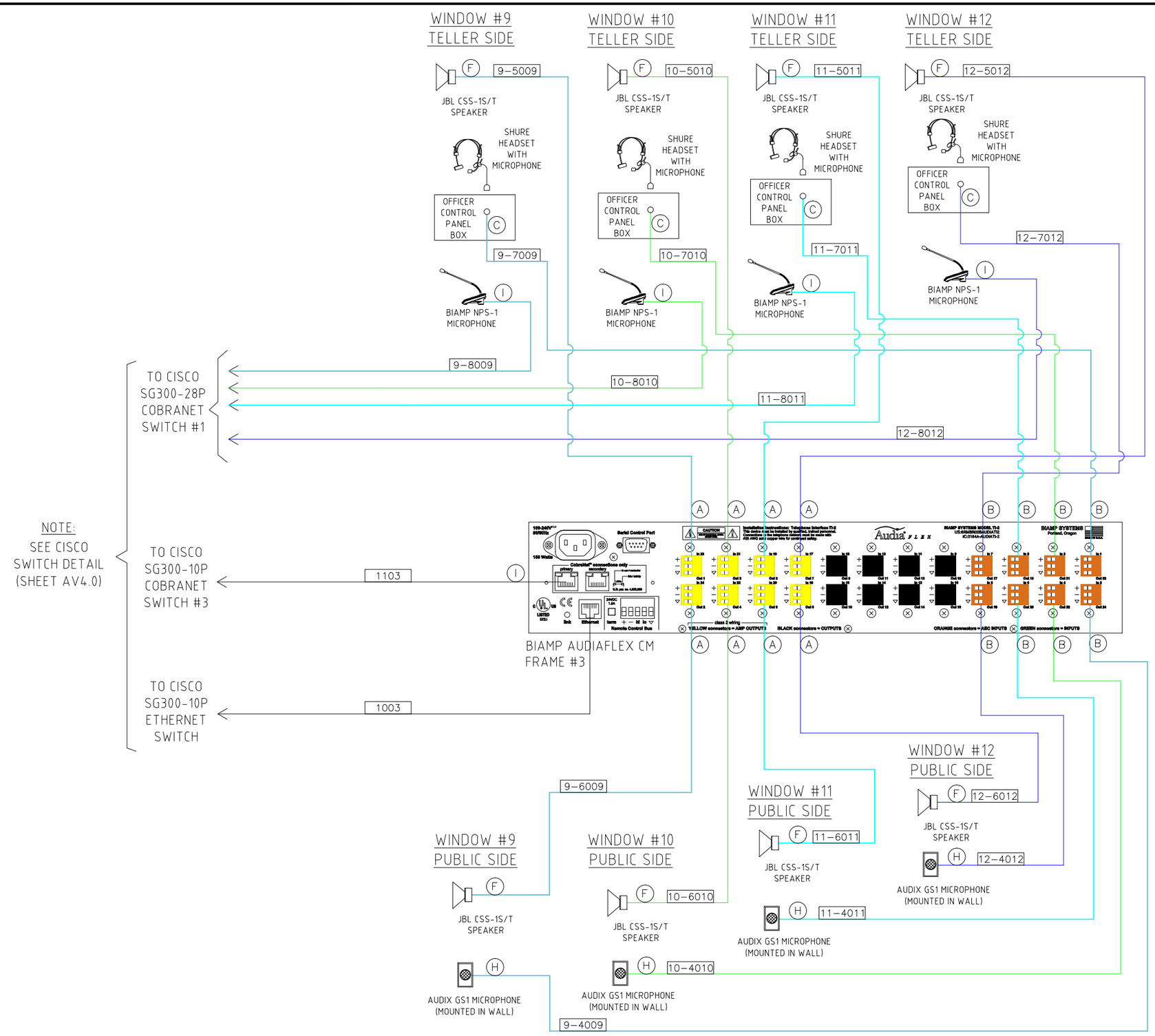

Date	Revisions	By

707 Platinum Point, Suite 2001
Lake Mary, FL 32746
Phone - (407)936-7300
Fax (407)833-4990
www.genproj.com
solutions@genproj.com

GENERAL PROJECTION SYSTEMS

WINDOW SYSTEM - 3 OF 6

U.S. DEPARTMENT OF STATE (NIV) Port Au Prince, Haiti

DRAWN BY	GUS
ENGINEERED BY	VA
DATE DRAWN	JUNE 13, 2014
SCALE	AS NOTED
PROGRAMMING	CS
DRAWING NO.	AV3.2

General Projection Systems Inc. hereby reserves its common law copyrights and other copyrights in these plans, ideas, and designs. These ideas, designs and plans are not to be copied or changed in any manner or form whatsoever, nor are they to be assigned to any third party without first obtaining the express written permission from General Projection Systems Inc.

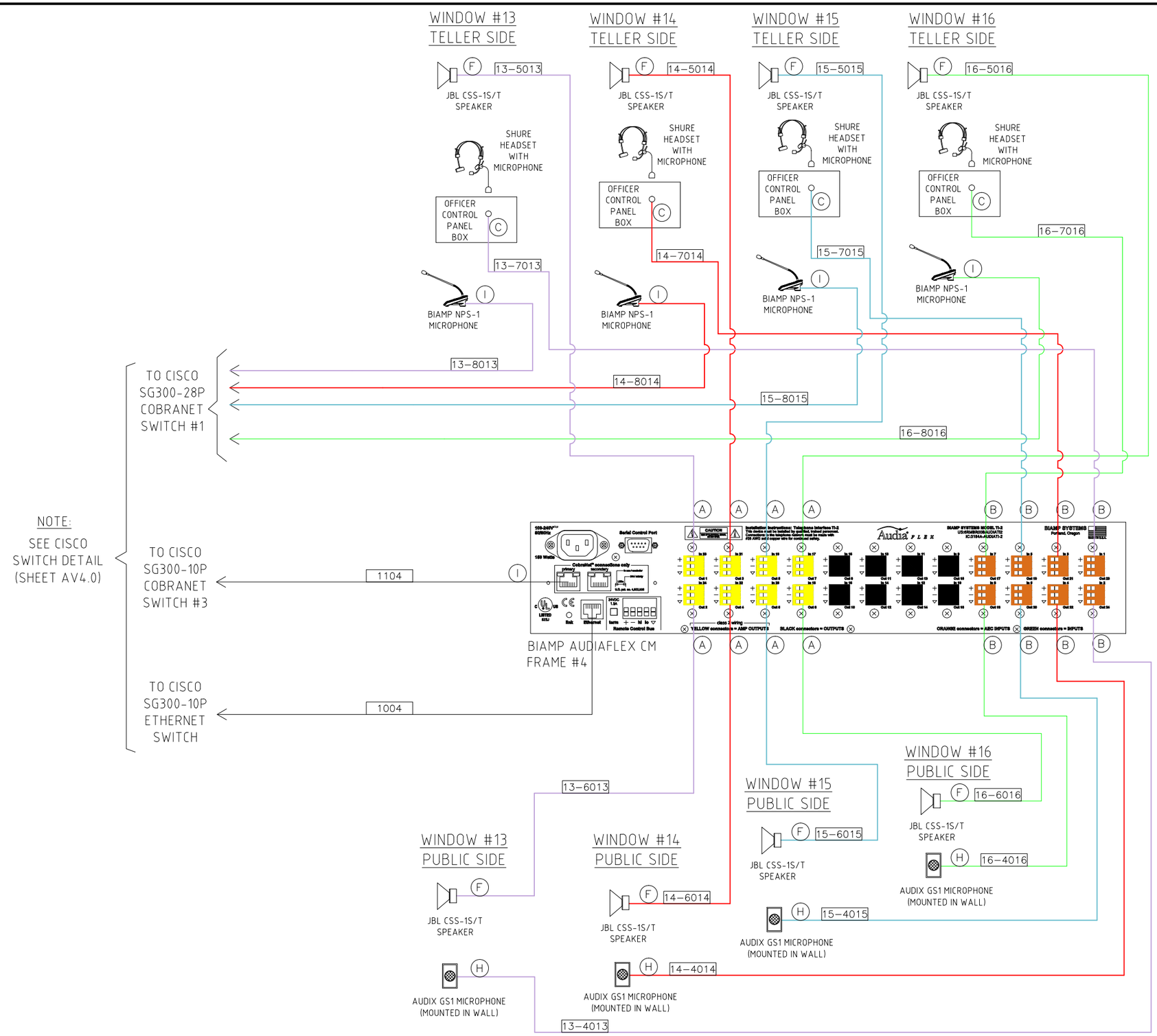

Date	Revisions	By

707 Platinum Point, Suite 2001
Lake Mary, FL 32746
Phone - (407)936-7300
Fax (407)833-4990
www.genproj.com
solutions@genproj.com

GENERAL PROJECTION SYSTEMS

WINDOW SYSTEM - 4 OF 6

U.S. DEPARTMENT OF STATE
(NIV) Port Au Prince, Haiti

DRAWN BY	GUS
ENGINEERED BY	VA
DATE DRAWN	JUNE 13, 2014
SCALE	AS NOTED
PROGRAMMING	CS
DRAWING NO.	AV3.3

General Projection Systems Inc. hereby reserves its common law copyrights and other copyrights in these plans, ideas, and designs. These ideas, designs and plans are not to be copied or changed in any manner or form whatsoever, nor are they to be assigned to any third party without first obtaining the express written permission from General Projection Systems Inc.

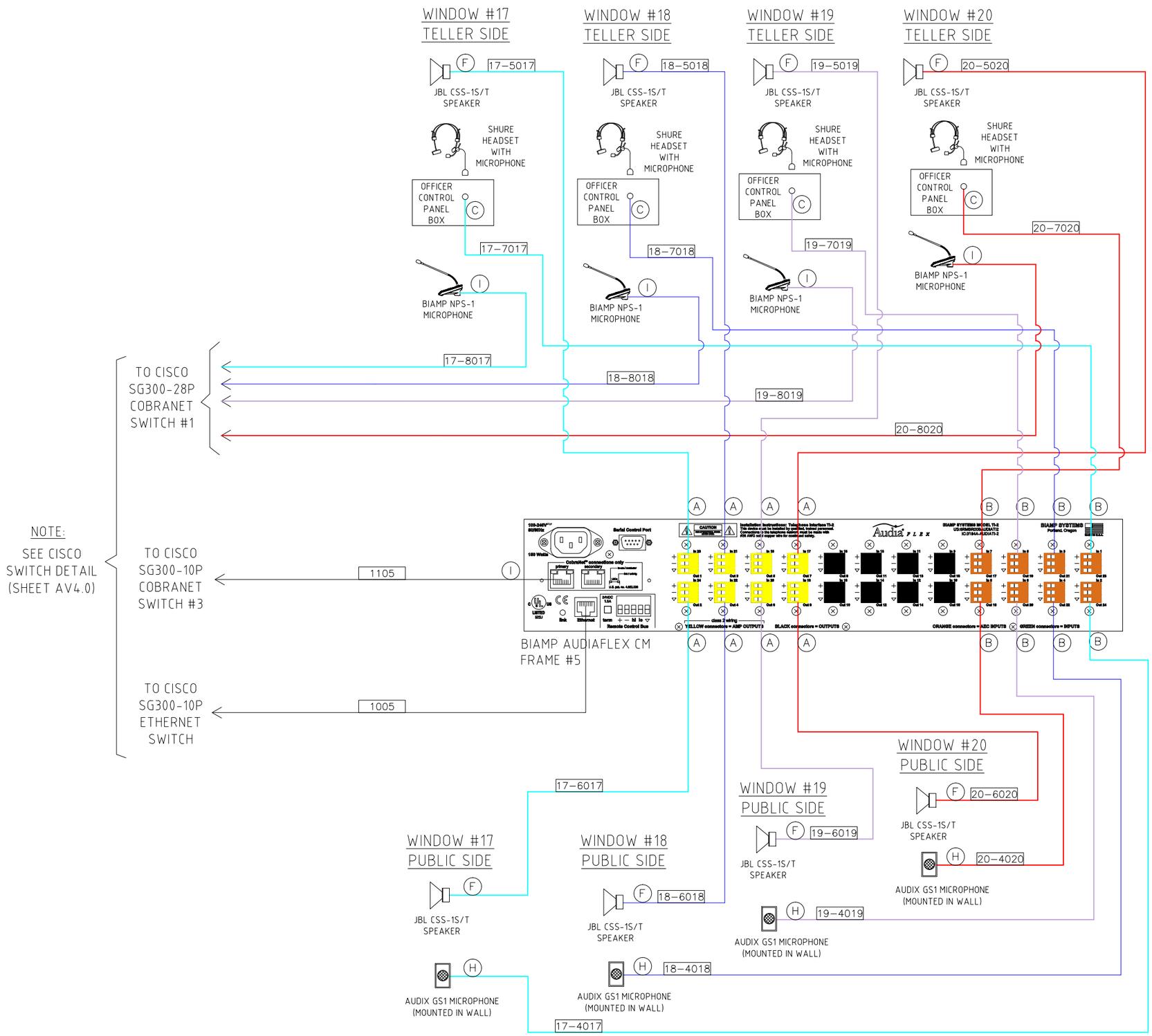

Date	Revisions	By

707 Platinum Point, Suite 2001
Lake Mary, FL 32746
Phone - (407)936-7300
Fax (407)833-4990
www.genproj.com
solutions@genproj.com

GENERAL PROJECTION SYSTEMS

WINDOW SYSTEM - 5 OF 6

U.S. DEPARTMENT OF STATE
(NIV) Port Au Prince, Haiti

DRAWN BY	GUS
ENGINEERED BY	VA
DATE DRAWN	JUNE 13, 2014
SCALE	AS NOTED
PROGRAMMING	CS
DRAWING NO.	AV3.4

General Projection Systems Inc. hereby reserves its common law copyrights and other copyrights in these plans, ideas, and designs. These ideas, designs and plans are not to be copied or changed in any manner or form whatsoever, nor are they to be assigned to any third party without first obtaining the express written permission from General Projection Systems Inc.

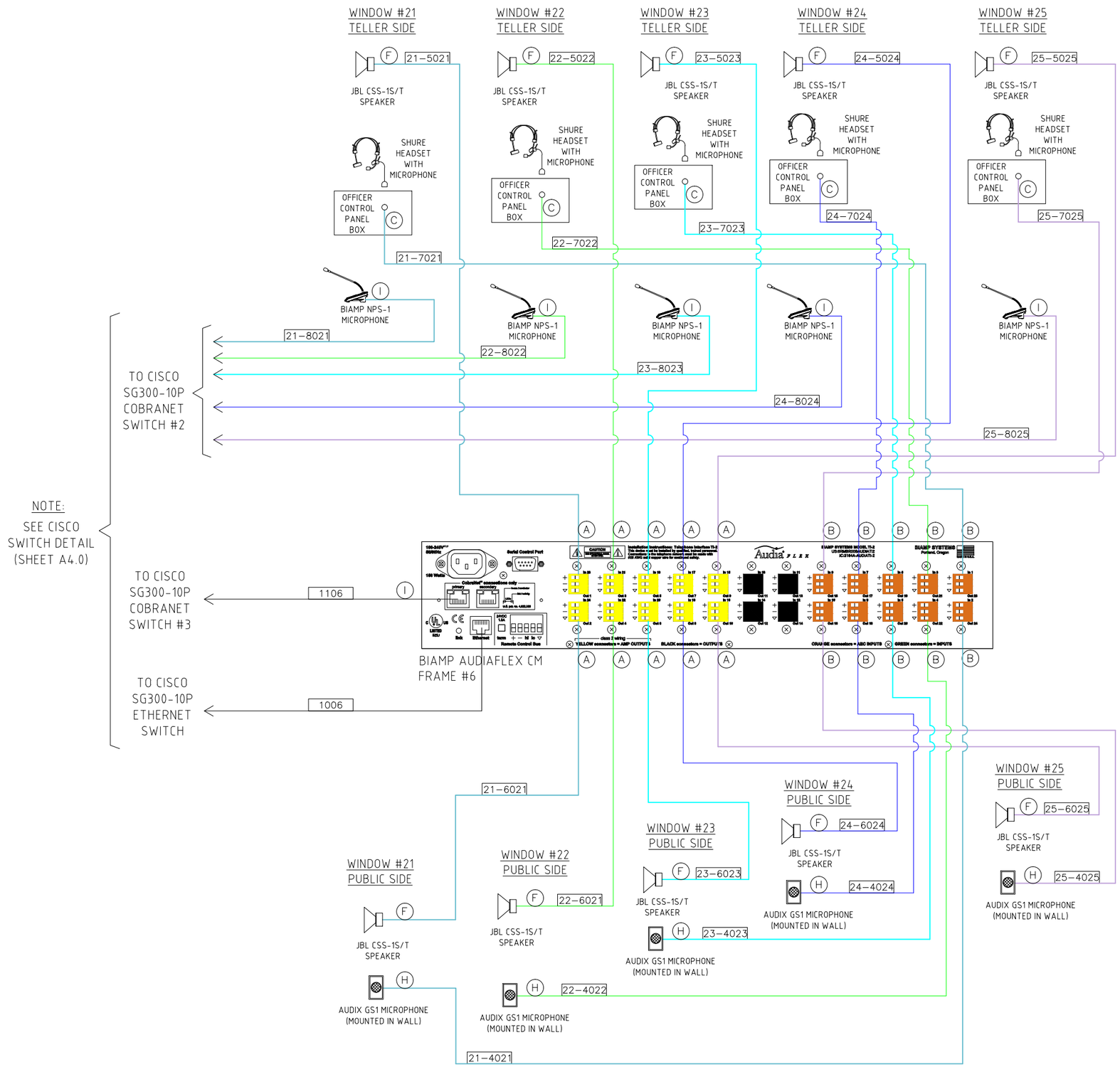

Date	Revisions	By

707 Platinum Point, Suite 2001
Lake Mary, FL 32746
Phone - (407)936-7300
Fax (407)833-4990
www.genproj.com
solutions@genproj.com

GENERAL PROJECTION SYSTEMS

WINDOW SYSTEM - 6 OF 6

U.S. DEPARTMENT OF STATE (NIV) Port Au Prince, Haiti

DRAWN BY	GUS
ENGINEERED BY	VA
DATE DRAWN	JUNE 13, 2014
SCALE	AS NOTED
PROGRAMMING	CS
DRAWING NO.	AV3.5

General Projection Systems Inc. hereby reserves its common law copyrights and other copyrights in these plans, ideas, and designs. These ideas, designs and plans are not to be copied or changed in any manner or form whatsoever, nor are they to be assigned to any third party without first obtaining the express written permission from General Projection Systems Inc.

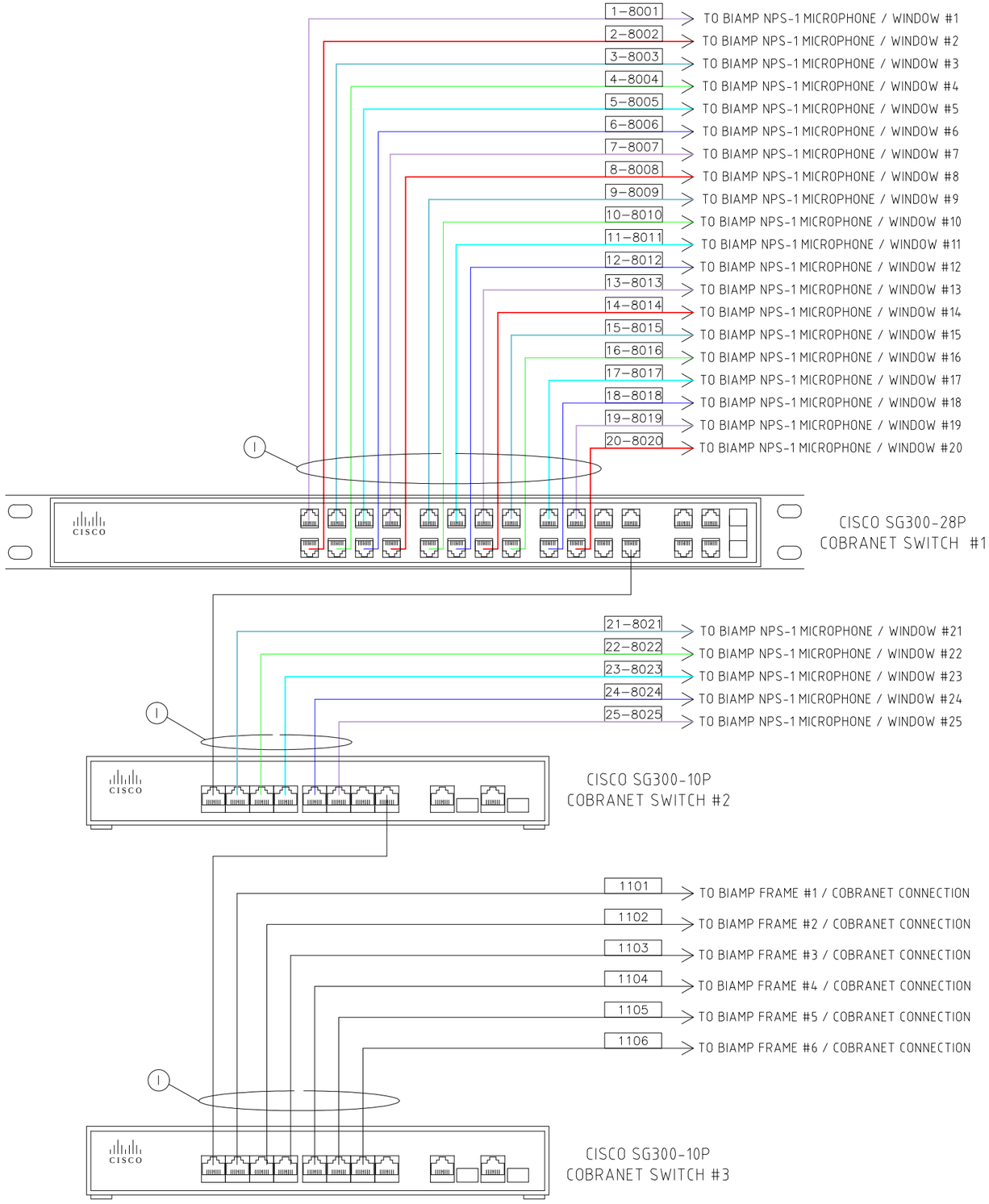

Date	Revisions	By

GENERAL PROJECTION SYSTEMS

707 Platinum Point, Suite 2001
Lake Mary, FL 32746
Phone - (407)936-7300
Fax (407)833-4990
www.genproj.com
solutions@genproj.com

CISCO SWITCH DETAIL

U.S. DEPARTMENT OF STATE
(NIV) Port Au Prince, Haiti

DRAWN BY	GUS
ENGINEERED BY	VA
DATE DRAWN	JUNE 13, 2014
SCALE	AS NOTED
PROGRAMMING	CS
DRAWING NO.	AV4.0

General Projection Systems Inc. hereby reserves its common law copyrights and other copyrights in these plans, ideas, and designs. These ideas, designs and plans are not to be copied or changed in any manner or form whatsoever, nor are they to be assigned to any third party without first obtaining the express written permission from General Projection Systems Inc.

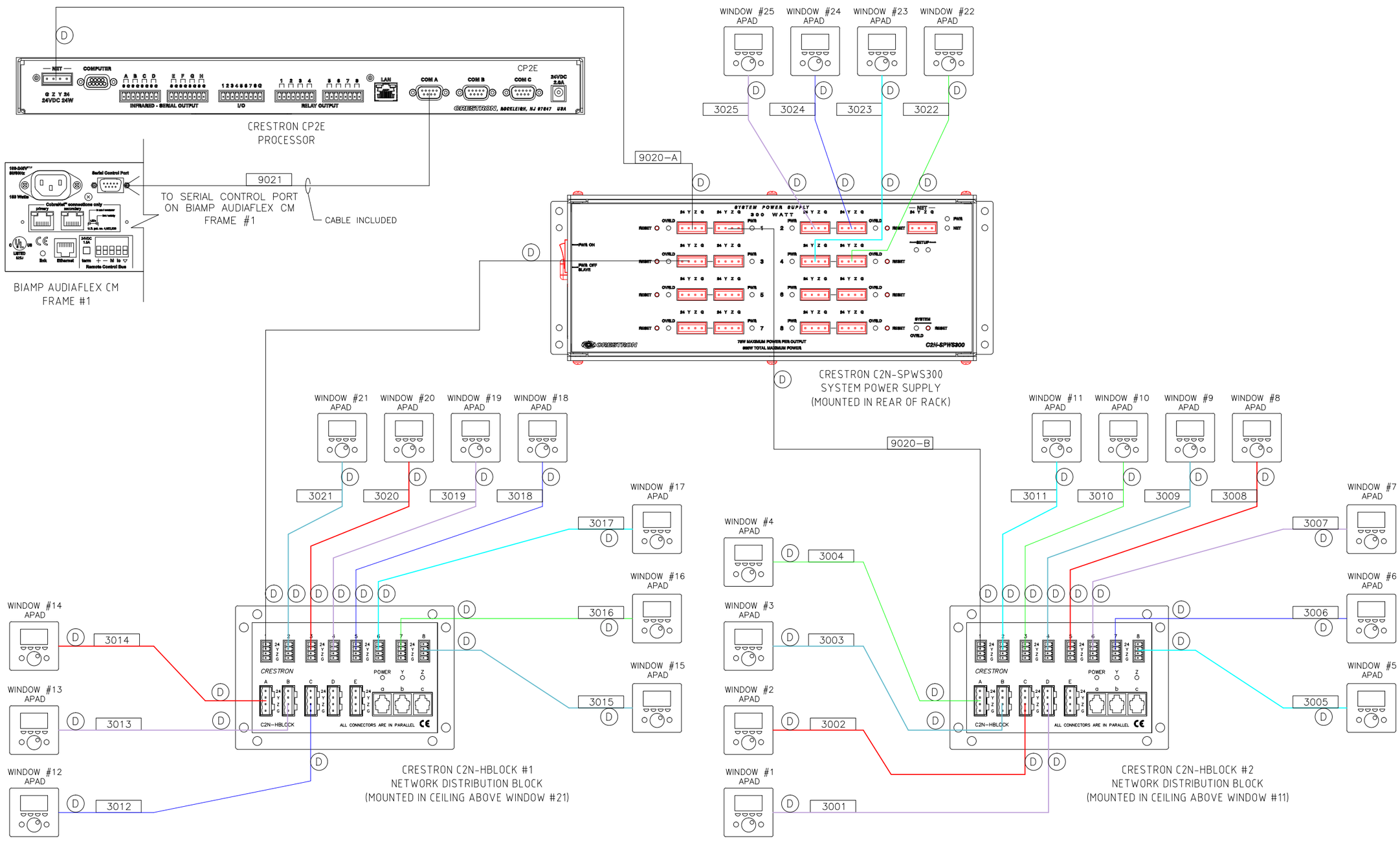

CRESTRON APAD CONTROL PANELS (TOTAL 25)

Date	Revisions	By

707 Platinum Point, Suite 2001
Lake Mary, FL 32746
Phone - (407)936-7300
Fax (407)833-4990
www.genproj.com
solutions@genproj.com

GENERAL PROJECTION SYSTEMS

CRESTRON DETAIL

U.S. DEPARTMENT OF STATE
(NIV) Port Au Prince, Haiti

DRAWN BY	GUS
ENGINEERED BY	VA
DATE DRAWN	JUNE 13, 2014
SCALE	AS NOTED
PROGRAMMING	CS
DRAWING NO.	AV5.0

General Projection Systems Inc. hereby reserves its common law copyrights and other copyrights in these plans, ideas, and designs. These ideas, designs and plans are not to be copied or changed in any manner or form whatsoever, nor are they to be assigned to any third party without first obtaining the express written permission from General Projection Systems Inc.

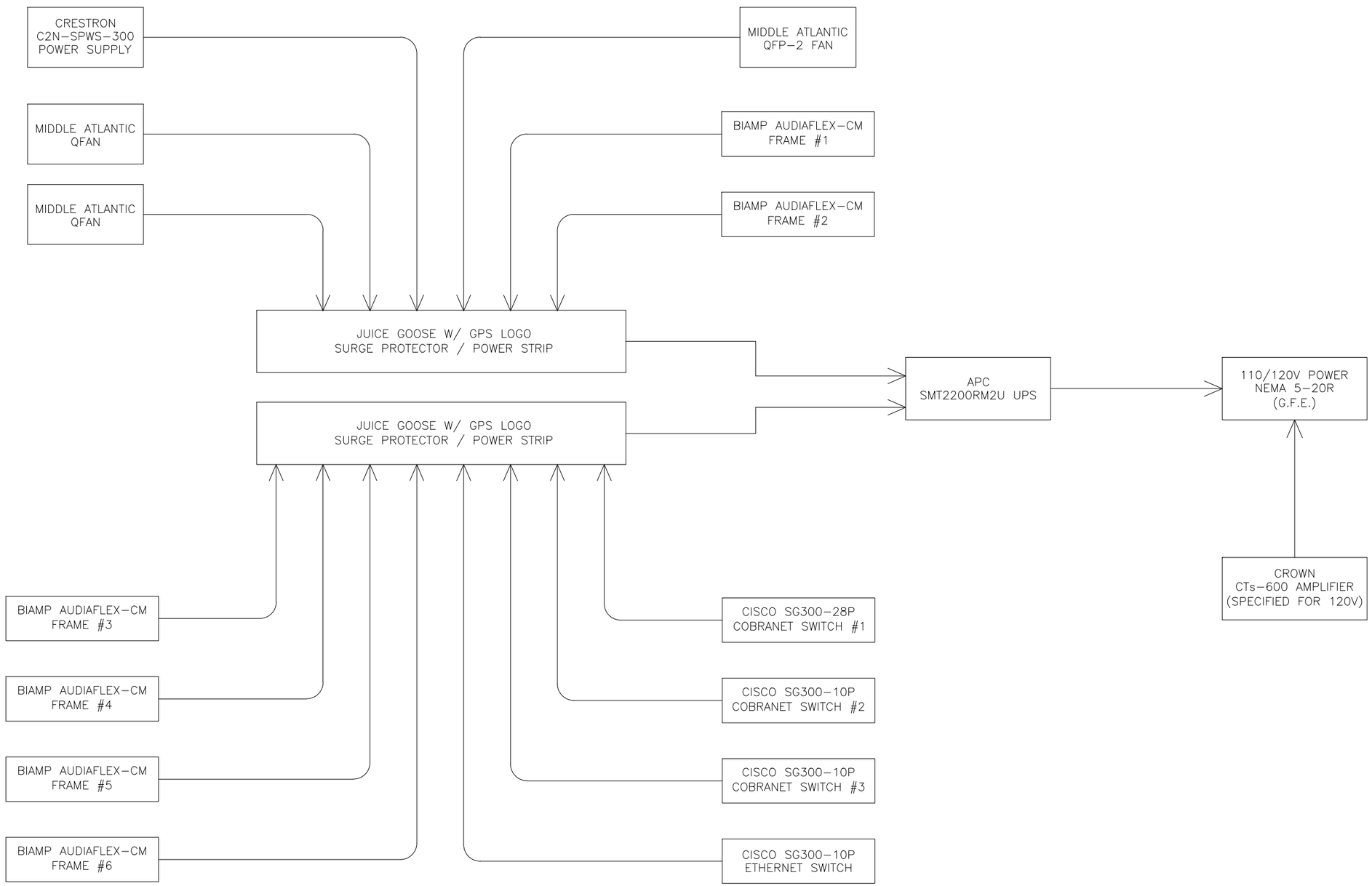

POWER WIRING PLAN

Date	Revisions	By

GENERAL PROJECTION SYSTEMS
707 Platinum Point, Suite 2001
Lake Mary, FL 32746
Phone - (407)936-7300
Fax (407)833-4990
www.genproj.com
solutions@genproj.com

POWER WIRING PLAN

U.S. DEPARTMENT OF STATE
(NIV) Port Au Prince, Haiti

DRAWN BY: GUS
ENGINEERED BY: VA
DATE DRAWN: JUNE 13, 2014
SCALE: AS NOTED
PROGRAMMING: CS
DRAWING NO.: AV6.0

General Projection Systems Inc. hereby reserves its common law copyrights and other copyrights in these plans, ideas, and designs. These ideas, designs and plans are not to be copied or changed in any manner or form whatsoever, nor are they to be assigned to any third party without first obtaining the express written permission from General Projection Systems Inc.

BIAMP SPEAKER CONNECTOR (YELLOW)

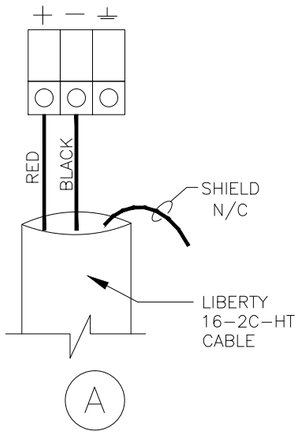

BIAMP MIC CONNECTOR (ORANGE)

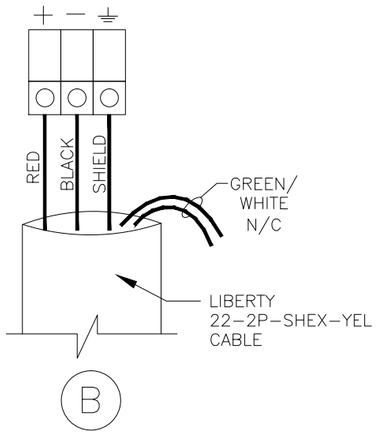

XLR CONNECTOR

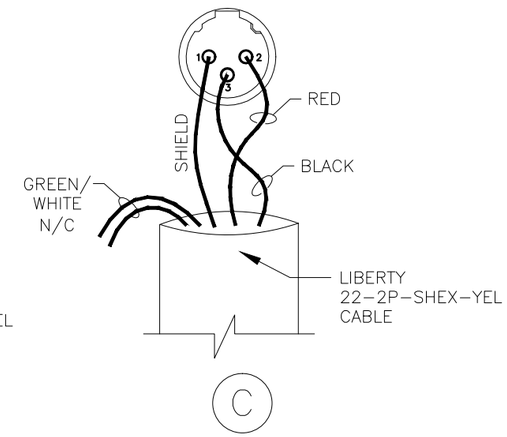

CRESNET CONNECTOR

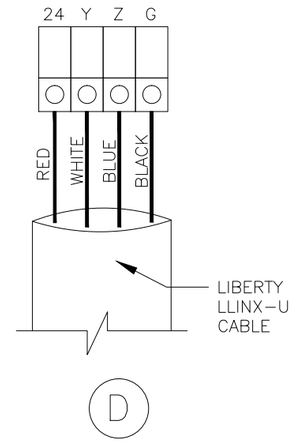

CRESNET CONNECTOR WITHOUT RED WIRE CONNECTED

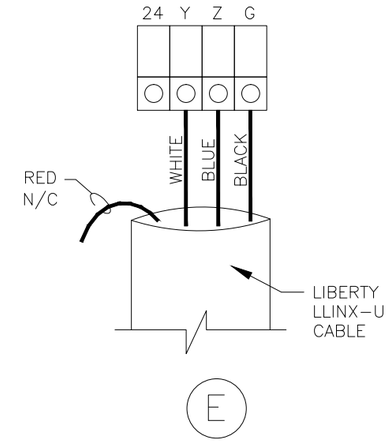

JBL CSS-1S/T SPEAKER (OFFICER/APPLICANT)

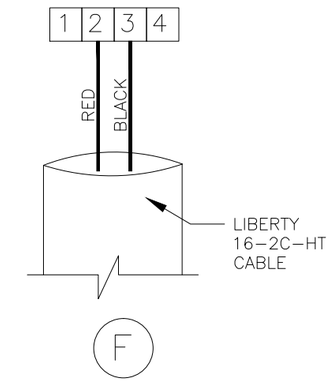

CROWN CTs-600 70V AMPLIFIER OUTPUT CONNECTION

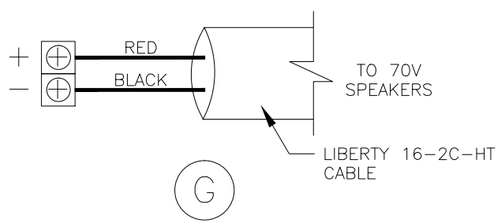

COBRANET NETWORK DEVICES USE T-568B STANDARD

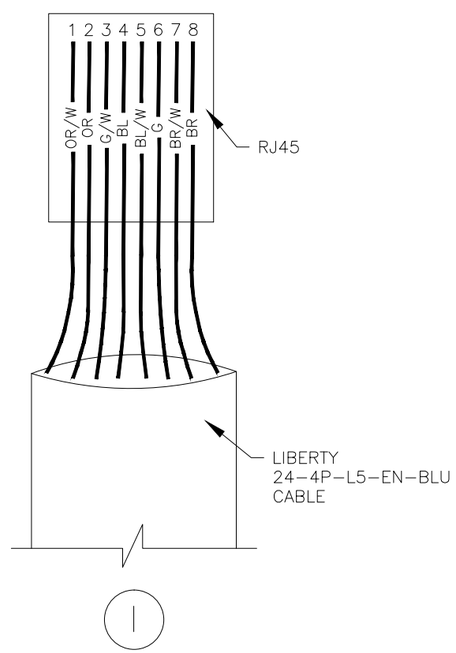

BIAMP OUTPUT CONNECTOR (BLACK)

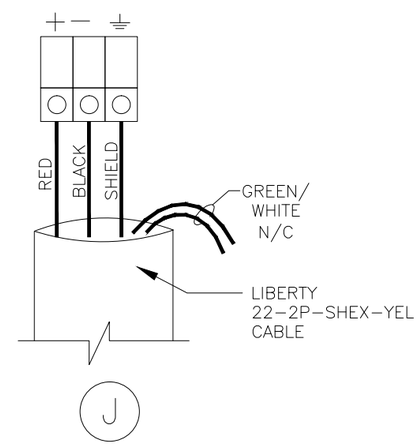

CROWN CTs-600 AMP INPUT CONNECTION

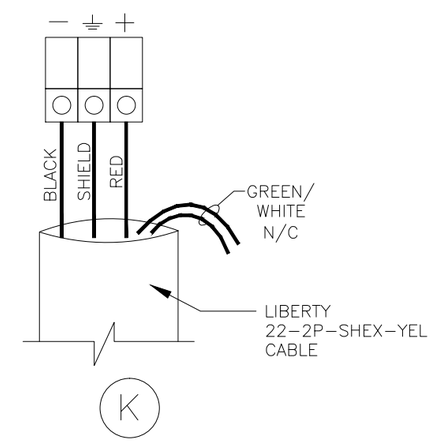

AUDIX GS1 MICROPHONE CONNECTOR

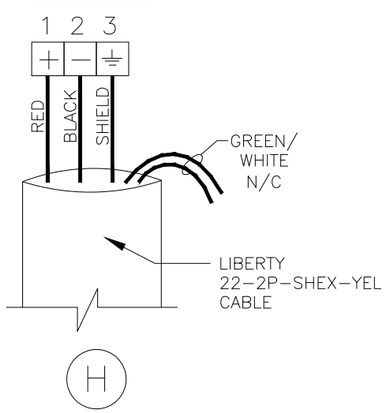

JBL CONTROL 24CT MICRO PAGING SPEAKER

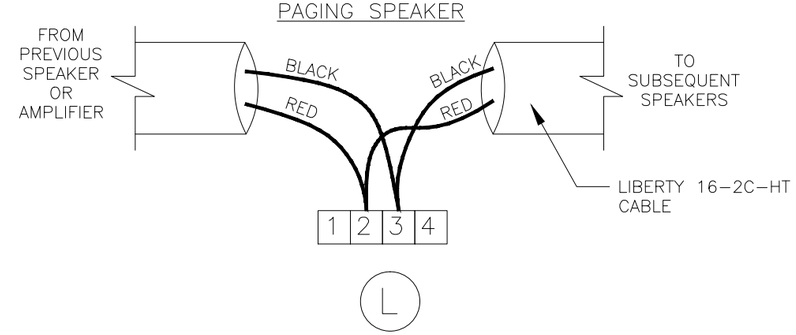

Date	Revisions	By

707 Platinum Point, Suite 2001
Lake Mary, FL 32746
Phone - (407)936-7300
Fax (407)833-4990
www.genproj.com
solutions@genproj.com

GENERAL PROJECTION SYSTEMS

WIRE DETAILS

U.S. DEPARTMENT OF STATE (NIV) Port Au Prince, Haiti

DRAWN BY	GUS
ENGINEERED BY	VA
DATE DRAWN	JUNE 13, 2014
SCALE	AS NOTED
PROGRAMMING	CS
DRAWING NO.	AV7.0

General Projection Systems Inc. hereby reserves its common law copyrights and other copyrights in these plans, ideas, and designs. These ideas, designs and plans are not to be copied or changed in any manner or form whatsoever, nor are they to be assigned to any third party without first obtaining the express written permission from General Projection Systems Inc.

ITEM #	MANUFACTURER	MODEL NUMBER	DESCRIPTION
1	MIDDLE ATLANTIC	WRK37SA-32/MW-LVT	WRK37SA-32 RACK with MW-LVT TOP
2	JUICE GOOSE	JG8.0	POWER STRIP W/GPS LOGO PLATE
3	MIDDLE ATLANTIC	EB-1	1 RU BLANK PLATE
4	CRESTRON	CP2E	PROCESSOR
5	MIDDLE ATLANTIC	EB-2	2 RU BLANK PLATE
6	CISCO	SG300-28P	COBRANET SWITCH #1
7	CISCO	SG300-10P	COBRANET SWITCH #2
8	CISCO	SG300-10P	COBRANET SWITCH #3
9	MIDDLE ATLANTIC	U1	RACK SHELF
10	MIDDLE ATLANTIC	HHCM-2	2 RU WIRE MANAGEMENT PANEL
11	CISCO	SG300-10P	ETHERNET SWITCH
12	BIAMP	AUDIAFLEX CM	MIXING FRAME #1
13	BIAMP	AUDIAFLEX CM	MIXING FRAME #2
14	BIAMP	AUDIAFLEX CM	MIXING FRAME #3
15	BIAMP	AUDIAFLEX CM	MIXING FRAME #4
16	BIAMP	AUDIAFLEX CM	MIXING FRAME #5
17	BIAMP	AUDIAFLEX CM	MIXING FRAME #6
18	BIAMP	AUDIAFLEX CM	MIXING FRAME #7
19	MIDDLE ATLANTIC	QFP-2	3 RU FAN ASSEMBLY
20	CRESTRON	C2N-SPWS300	POWER SUPPLY MTD. IN BACK OF RACK
21	CROWN	CTs-600	AUDIO AMPLIFIER, PAGING
22	APC	SMT2200RM2U	2200VA UPS
23	MIDDLE ATLANTIC	QFAN	FAN MOUNTED FLUSH ON TOP OF RACK

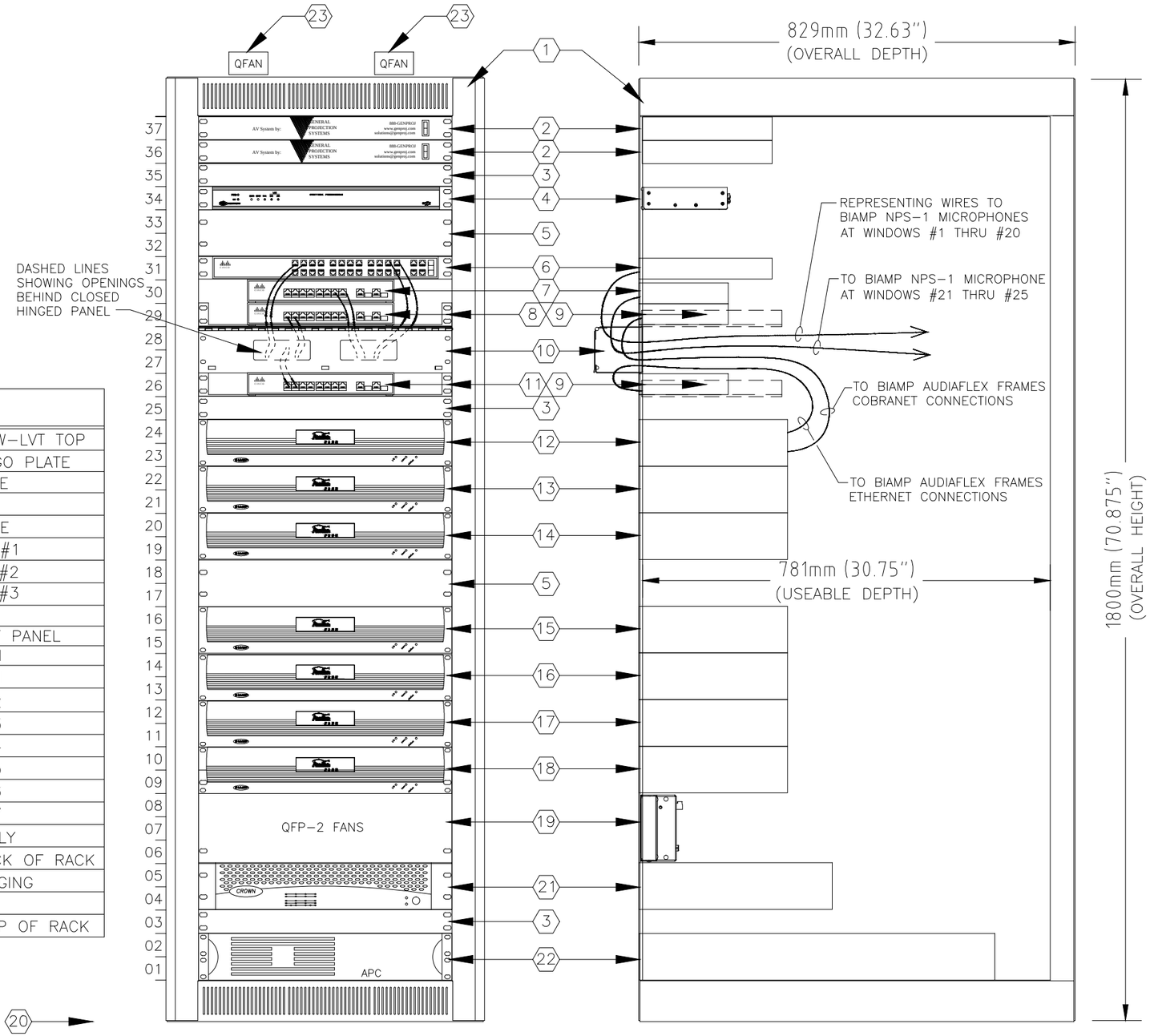

RACK – FRONT ELEVATION

RACK – SIDE ELEVATION

Date	Revisions	By

707 Platinum Point, Suite 2001
Lake Mary, FL 32746
Phone - (407)936-7300
Fax (407)833-4990
www.genproj.com
solutions@genproj.com

GENERAL PROJECTION SYSTEMS

RACK ELEVATION

U.S. DEPARTMENT OF STATE
(NIV) Port Au Prince, Haiti

DRAWN BY: GUS
ENGINEERED BY: VA
DATE DRAWN: JUNE 13, 2014
SCALE: AS NOTED
PROGRAMMING: CS
DRAWING NO.: AV8.0

General Projection Systems Inc. hereby reserves its common law copyrights and other copyrights in these plans, ideas, and designs. These ideas, designs and plans are not to be copied or changed in any manner or form whatsoever, nor are they to be assigned to any third party without first obtaining the express written permission from General Projection Systems Inc.

U.S. Department of State

Haiti/U.S. Embassy (NIV) GPS Microphone System

Wire Runs List for 25 WINDOWS

Revision Date:

Print Date

Wire Number	Wire Type	Cable O.D.	Equipment From	Connector	Connector Type	Equipment To	Connector To	Connector Type
1-6001	Liberty 16-2C-HT	0.191in/4.85mm	GPS System Rack Location	Biamp Phoenix Connector	A	Applicant Speaker	Applicant Speaker Connector	F
2-6002	Liberty 16-2C-HT	0.191in/4.85mm	GPS System Rack Location	Biamp Phoenix Connector	A	Applicant Speaker	Applicant Speaker Connector	F
3-6003	Liberty 16-2C-HT	0.191in/4.85mm	GPS System Rack Location	Biamp Phoenix Connector	A	Applicant Speaker	Applicant Speaker Connector	F
4-6004	Liberty 16-2C-HT	0.191in/4.85mm	GPS System Rack Location	Biamp Phoenix Connector	A	Applicant Speaker	Applicant Speaker Connector	F
5-6005	Liberty 16-2C-HT	0.191in/4.85mm	GPS System Rack Location	Biamp Phoenix Connector	A	Applicant Speaker	Applicant Speaker Connector	F
6-6006	Liberty 16-2C-HT	0.191in/4.85mm	GPS System Rack Location	Biamp Phoenix Connector	A	Applicant Speaker	Applicant Speaker Connector	F
7-6007	Liberty 16-2C-HT	0.191in/4.85mm	GPS System Rack Location	Biamp Phoenix Connector	A	Applicant Speaker	Applicant Speaker Connector	F
8-6008	Liberty 16-2C-HT	0.191in/4.85mm	GPS System Rack Location	Biamp Phoenix Connector	A	Applicant Speaker	Applicant Speaker Connector	F
9-6009	Liberty 16-2C-HT	0.191in/4.85mm	GPS System Rack Location	Biamp Phoenix Connector	A	Applicant Speaker	Applicant Speaker Connector	F
10-6010	Liberty 16-2C-HT	0.191in/4.85mm	GPS System Rack Location	Biamp Phoenix Connector	A	Applicant Speaker	Applicant Speaker Connector	F
11-6011	Liberty 16-2C-HT	0.191in/4.85mm	GPS System Rack Location	Biamp Phoenix Connector	A	Applicant Speaker	Applicant Speaker Connector	F
12-6012	Liberty 16-2C-HT	0.191in/4.85mm	GPS System Rack Location	Biamp Phoenix Connector	A	Applicant Speaker	Applicant Speaker Connector	F
13-6013	Liberty 16-2C-HT	0.191in/4.85mm	GPS System Rack Location	Biamp Phoenix Connector	A	Applicant Speaker	Applicant Speaker Connector	F
14-6014	Liberty 16-2C-HT	0.191in/4.85mm	GPS System Rack Location	Biamp Phoenix Connector	A	Applicant Speaker	Applicant Speaker Connector	F
15-6015	Liberty 16-2C-HT	0.191in/4.85mm	GPS System Rack Location	Biamp Phoenix Connector	A	Applicant Speaker	Applicant Speaker Connector	F
16-6016	Liberty 16-2C-HT	0.191in/4.85mm	GPS System Rack Location	Biamp Phoenix Connector	A	Applicant Speaker	Applicant Speaker Connector	F
17-6017	Liberty 16-2C-HT	0.191in/4.85mm	GPS System Rack Location	Biamp Phoenix Connector	A	Applicant Speaker	Applicant Speaker Connector	F
18-6018	Liberty 16-2C-HT	0.191in/4.85mm	GPS System Rack Location	Biamp Phoenix Connector	A	Applicant Speaker	Applicant Speaker Connector	F
19-6019	Liberty 16-2C-HT	0.191in/4.85mm	GPS System Rack Location	Biamp Phoenix Connector	A	Applicant Speaker	Applicant Speaker Connector	F
20-6020	Liberty 16-2C-HT	0.191in/4.85mm	GPS System Rack Location	Biamp Phoenix Connector	A	Applicant Speaker	Applicant Speaker Connector	F
21-6021	Liberty 16-2C-HT	0.191in/4.85mm	GPS System Rack Location	Biamp Phoenix Connector	A	Applicant Speaker	Applicant Speaker Connector	F
22-6022	Liberty 16-2C-HT	0.191in/4.85mm	GPS System Rack Location	Biamp Phoenix Connector	A	Applicant Speaker	Applicant Speaker Connector	F
23-6023	Liberty 16-2C-HT	0.191in/4.85mm	GPS System Rack Location	Biamp Phoenix Connector	A	Applicant Speaker	Applicant Speaker Connector	F
24-6024	Liberty 16-2C-HT	0.191in/4.85mm	GPS System Rack Location	Biamp Phoenix Connector	A	Applicant Speaker	Applicant Speaker Connector	F
25-6025	Liberty 16-2C-HT	0.191in/4.85mm	GPS System Rack Location	Biamp Phoenix Connector	A	Applicant Speaker	Applicant Speaker Connector	F
1-4001	Liberty 22-2P-SHEX-YEL	0.260in/6.60mm	GPS System Rack Location	Biamp Phoenix Connector	B	Applicant Microphone	Applicant Wall Microphone	H
2-4002	Liberty 22-2P-SHEX-YEL	0.260in/6.60mm	GPS System Rack Location	Biamp Phoenix Connector	B	Applicant Microphone	Apllicant Wall Microphone	H
3-4003	Liberty 22-2P-SHEX-YEL	0.260in/6.60mm	GPS System Rack Location	Biamp Phoenix Connector	B	Applicant Microphone	Applicant Wall Microphone	H
4-4004	Liberty 22-2P-SHEX-YEL	0.260in/6.60mm	GPS System Rack Location	Biamp Phoenix Connector	B	Applicant Microphone	Apllicant Wall Microphone	H
5-4005	Liberty 22-2P-SHEX-YEL	0.260in/6.60mm	GPS System Rack Location	Biamp Phoenix Connector	B	Applicant Microphone	Applicant Wall Microphone	H
6-4006	Liberty 22-2P-SHEX-YEL	0.260in/6.60mm	GPS System Rack Location	Biamp Phoenix Connector	B	Applicant Microphone	Apllicant Wall Microphone	H
7-4007	Liberty 22-2P-SHEX-YEL	0.260in/6.60mm	GPS System Rack Location	Biamp Phoenix Connector	B	Applicant Microphone	Applicant Wall Microphone	H
8-4008	Liberty 22-2P-SHEX-YEL	0.260in/6.60mm	GPS System Rack Location	Biamp Phoenix Connector	B	Applicant Microphone	Apllicant Wall Microphone	H
9-4009	Liberty 22-2P-SHEX-YEL	0.260in/6.60mm	GPS System Rack Location	Biamp Phoenix Connector	B	Applicant Microphone	Applicant Wall Microphone	H
10-4010	Liberty 22-2P-SHEX-YEL	0.260in/6.60mm	GPS System Rack Location	Biamp Phoenix Connector	B	Applicant Microphone	Apllicant Wall Microphone	H
11-4011	Liberty 22-2P-SHEX-YEL	0.260in/6.60mm	GPS System Rack Location	Biamp Phoenix Connector	B	Applicant Microphone	Applicant Wall Microphone	H
12-4012	Liberty 22-2P-SHEX-YEL	0.260in/6.60mm	GPS System Rack Location	Biamp Phoenix Connector	B	Applicant Microphone	Apllicant Wall Microphone	H
13-4013	Liberty 22-2P-SHEX-YEL	0.260in/6.60mm	GPS System Rack Location	Biamp Phoenix Connector	B	Applicant Microphone	Apllicant Wall Microphone	H
14-4014	Liberty 22-2P-SHEX-YEL	0.260in/6.60mm	GPS System Rack Location	Biamp Phoenix Connector	B	Applicant Microphone	Apllicant Wall Microphone	H
15-4015	Liberty 22-2P-SHEX-YEL	0.260in/6.60mm	GPS System Rack Location	Biamp Phoenix Connector	B	Applicant Microphone	Apllicant Wall Microphone	H
16-4016	Liberty 22-2P-SHEX-YEL	0.260in/6.60mm	GPS System Rack Location	Biamp Phoenix Connector	B	Applicant Microphone	Apllicant Wall Microphone	H
17-4017	Liberty 22-2P-SHEX-YEL	0.260in/6.60mm	GPS System Rack Location	Biamp Phoenix Connector	B	Applicant Microphone	Apllicant Wall Microphone	H
18-4018	Liberty 22-2P-SHEX-YEL	0.260in/6.60mm	GPS System Rack Location	Biamp Phoenix Connector	B	Applicant Microphone	Apllicant Wall Microphone	H
19-4019	Liberty 22-2P-SHEX-YEL	0.260in/6.60mm	GPS System Rack Location	Biamp Phoenix Connector	B	Applicant Microphone	Apllicant Wall Microphone	H
20-4020	Liberty 22-2P-SHEX-YEL	0.260in/6.60mm	GPS System Rack Location	Biamp Phoenix Connector	B	Applicant Microphone	Apllicant Wall Microphone	H
21-4021	Liberty 22-2P-SHEX-YEL	0.260in/6.60mm	GPS System Rack Location	Biamp Phoenix Connector	B	Applicant Microphone	Apllicant Wall Microphone	H
22-4022	Liberty 22-2P-SHEX-YEL	0.260in/6.60mm	GPS System Rack Location	Biamp Phoenix Connector	B	Applicant Microphone	Apllicant Wall Microphone	H
23-4023	Liberty 22-2P-SHEX-YEL	0.260in/6.60mm	GPS System Rack Location	Biamp Phoenix Connector	B	Applicant Microphone	Apllicant Wall Microphone	H
24-4024	Liberty 22-2P-SHEX-YEL	0.260in/6.60mm	GPS System Rack Location	Biamp Phoenix Connector	B	Applicant Microphone	Apllicant Wall Microphone	H
25-4025	Liberty 22-2P-SHEX-YEL	0.260in/6.60mm	GPS System Rack Location	Biamp Phoenix Connector	B	Applicant Microphone	Apllicant Wall Microphone	H

Date	Revisions	By

707 Platinum Point, Suite 2001
Lake Mary, FL 32746
Phone - (407)936-7300
Fax (407)833-4990
www.genproj.com
solutions@genproj.com

GENERAL PROJECTION SYSTEMS

WIRE RUNS LIST 1 OF 3

U.S. DEPARTMENT OF STATE
(NIV) Port Au Prince, Haiti

DRAWN BY: GUS
ENGINEERED BY: VA
DATE DRAWN: JUNE 13, 2014
SCALE: AS NOTED
PROGRAMMING: CS
DRAWING NO.: AV9.0

General Projection Systems Inc. hereby reserves its common law copyrights and other copyrights in these plans, ideas, and designs. These ideas, designs and plans are not to be copied or changed in any manner or form whatsoever, nor are they to be assigned to any third party without first obtaining the express written permission from General Projection Systems Inc.

U.S. Department of State

Haiti/U.S. Embassy (NIV) GPS Microphone System

Wire Runs List for 25 WINDOWS

Revision Date:

Print Date

Wire Number	Wire Type	Cable O.D.	Equipment From	Connector	Connector Type	Equipment To	Connector To	Connector Type
1-5001	Liberty 16-2C-HT	0.191in/4.85mm	GPS System Rack Location	Biamp Phoenix Connector	A	Officer Speaker	Officer Speaker Connection	F
2-5002	Liberty 16-2C-HT	0.191in/4.85mm	GPS System Rack Location	Biamp Phoenix Connector	A	Officer Speaker	Officer Speaker Connection	F
3-5003	Liberty 16-2C-HT	0.191in/4.85mm	GPS System Rack Location	Biamp Phoenix Connector	A	Officer Speaker	Officer Speaker Connection	F
4-5004	Liberty 16-2C-HT	0.191in/4.85mm	GPS System Rack Location	Biamp Phoenix Connector	A	Officer Speaker	Officer Speaker Connection	F
5-5005	Liberty 16-2C-HT	0.191in/4.85mm	GPS System Rack Location	Biamp Phoenix Connector	A	Officer Speaker	Officer Speaker Connection	F
6-5006	Liberty 16-2C-HT	0.191in/4.85mm	GPS System Rack Location	Biamp Phoenix Connector	A	Officer Speaker	Officer Speaker Connection	F
7-5007	Liberty 16-2C-HT	0.191in/4.85mm	GPS System Rack Location	Biamp Phoenix Connector	A	Officer Speaker	Officer Speaker Connection	F
8-5008	Liberty 16-2C-HT	0.191in/4.85mm	GPS System Rack Location	Biamp Phoenix Connector	A	Officer Speaker	Officer Speaker Connection	F
9-5009	Liberty 16-2C-HT	0.191in/4.85mm	GPS System Rack Location	Biamp Phoenix Connector	A	Officer Speaker	Officer Speaker Connection	F
10-5010	Liberty 16-2C-HT	0.191in/4.85mm	GPS System Rack Location	Biamp Phoenix Connector	A	Officer Speaker	Officer Speaker Connection	F
11-5011	Liberty 16-2C-HT	0.191in/4.85mm	GPS System Rack Location	Biamp Phoenix Connector	A	Officer Speaker	Officer Speaker Connection	F
12-5012	Liberty 16-2C-HT	0.191in/4.85mm	GPS System Rack Location	Biamp Phoenix Connector	A	Officer Speaker	Officer Speaker Connection	F
13-5013	Liberty 16-2C-HT	0.191in/4.85mm	GPS System Rack Location	Biamp Phoenix Connector	A	Officer Speaker	Officer Speaker Connection	F
14-5014	Liberty 16-2C-HT	0.191in/4.85mm	GPS System Rack Location	Biamp Phoenix Connector	A	Officer Speaker	Officer Speaker Connection	F
15-5015	Liberty 16-2C-HT	0.191in/4.85mm	GPS System Rack Location	Biamp Phoenix Connector	A	Officer Speaker	Officer Speaker Connection	F
16-5016	Liberty 16-2C-HT	0.191in/4.85mm	GPS System Rack Location	Biamp Phoenix Connector	A	Officer Speaker	Officer Speaker Connection	F
17-5017	Liberty 16-2C-HT	0.191in/4.85mm	GPS System Rack Location	Biamp Phoenix Connector	A	Officer Speaker	Officer Speaker Connection	F
18-5018	Liberty 16-2C-HT	0.191in/4.85mm	GPS System Rack Location	Biamp Phoenix Connector	A	Officer Speaker	Officer Speaker Connection	F
19-5019	Liberty 16-2C-HT	0.191in/4.85mm	GPS System Rack Location	Biamp Phoenix Connector	A	Officer Speaker	Officer Speaker Connection	F
20-5020	Liberty 16-2C-HT	0.191in/4.85mm	GPS System Rack Location	Biamp Phoenix Connector	A	Officer Speaker	Officer Speaker Connection	F
21-5021	Liberty 16-2C-HT	0.191in/4.85mm	GPS System Rack Location	Biamp Phoenix Connector	A	Officer Speaker	Officer Speaker Connection	F
22-5022	Liberty 16-2C-HT	0.191in/4.85mm	GPS System Rack Location	Biamp Phoenix Connector	A	Officer Speaker	Officer Speaker Connection	F
23-5023	Liberty 16-2C-HT	0.191in/4.85mm	GPS System Rack Location	Biamp Phoenix Connector	A	Officer Speaker	Officer Speaker Connection	F
24-5024	Liberty 16-2C-HT	0.191in/4.85mm	GPS System Rack Location	Biamp Phoenix Connector	A	Officer Speaker	Officer Speaker Connection	F
25-5025	Liberty 16-2C-HT	0.191in/4.85mm	GPS System Rack Location	Biamp Phoenix Connector	A	Officer Speaker	Officer Speaker Connection	F
1-8001	Liberty 24-4P-L5-EN-BLU	0.219in/5.57mm	GPS System Rack Location	RJ45 Plug	I	Officer Desk Microphone	RJ45 Plug	I
2-8002	Liberty 24-4P-L5-EN-BLU	0.219in/5.57mm	GPS System Rack Location	RJ45 Plug	I	Officer Desk Microphone	RJ45 Plug	I
3-8003	Liberty 24-4P-L5-EN-BLU	0.219in/5.57mm	GPS System Rack Location	RJ45 Plug	I	Officer Desk Microphone	RJ45 Plug	I
4-8004	Liberty 24-4P-L5-EN-BLU	0.219in/5.57mm	GPS System Rack Location	RJ45 Plug	I	Officer Desk Microphone	RJ45 Plug	I
5-8005	Liberty 24-4P-L5-EN-BLU	0.219in/5.57mm	GPS System Rack Location	RJ45 Plug	I	Officer Desk Microphone	RJ45 Plug	I
6-8006	Liberty 24-4P-L5-EN-BLU	0.219in/5.57mm	GPS System Rack Location	RJ45 Plug	I	Officer Desk Microphone	RJ45 Plug	I
7-8007	Liberty 24-4P-L5-EN-BLU	0.219in/5.57mm	GPS System Rack Location	RJ45 Plug	I	Officer Desk Microphone	RJ45 Plug	I
8-8008	Liberty 24-4P-L5-EN-BLU	0.219in/5.57mm	GPS System Rack Location	RJ45 Plug	I	Officer Desk Microphone	RJ45 Plug	I
9-8009	Liberty 24-4P-L5-EN-BLU	0.219in/5.57mm	GPS System Rack Location	RJ45 Plug	I	Officer Desk Microphone	RJ45 Plug	I
10-8010	Liberty 24-4P-L5-EN-BLU	0.219in/5.57mm	GPS System Rack Location	RJ45 Plug	I	Officer Desk Microphone	RJ45 Plug	I
11-8011	Liberty 24-4P-L5-EN-BLU	0.219in/5.57mm	GPS System Rack Location	RJ45 Plug	I	Officer Desk Microphone	RJ45 Plug	I
12-8012	Liberty 24-4P-L5-EN-BLU	0.219in/5.57mm	GPS System Rack Location	RJ45 Plug	I	Officer Desk Microphone	RJ45 Plug	I
13-8013	Liberty 24-4P-L5-EN-BLU	0.219in/5.57mm	GPS System Rack Location	RJ45 Plug	I	Officer Desk Microphone	RJ45 Plug	I
14-8014	Liberty 24-4P-L5-EN-BLU	0.219in/5.57mm	GPS System Rack Location	RJ45 Plug	I	Officer Desk Microphone	RJ45 Plug	I
15-8015	Liberty 24-4P-L5-EN-BLU	0.219in/5.57mm	GPS System Rack Location	RJ45 Plug	I	Officer Desk Microphone	RJ45 Plug	I
16-8016	Liberty 24-4P-L5-EN-BLU	0.219in/5.57mm	GPS System Rack Location	RJ45 Plug	I	Officer Desk Microphone	RJ45 Plug	I
17-8017	Liberty 24-4P-L5-EN-BLU	0.219in/5.57mm	GPS System Rack Location	RJ45 Plug	I	Officer Desk Microphone	RJ45 Plug	I
18-8018	Liberty 24-4P-L5-EN-BLU	0.219in/5.57mm	GPS System Rack Location	RJ45 Plug	I	Officer Desk Microphone	RJ45 Plug	I
19-8019	Liberty 24-4P-L5-EN-BLU	0.219in/5.57mm	GPS System Rack Location	RJ45 Plug	I	Officer Desk Microphone	RJ45 Plug	I
20-8020	Liberty 24-4P-L5-EN-BLU	0.219in/5.57mm	GPS System Rack Location	RJ45 Plug	I	Officer Desk Microphone	RJ45 Plug	I
21-8021	Liberty 24-4P-L5-EN-BLU	0.219in/5.57mm	GPS System Rack Location	RJ45 Plug	I	Officer Desk Microphone	RJ45 Plug	I
22-8022	Liberty 24-4P-L5-EN-BLU	0.219in/5.57mm	GPS System Rack Location	RJ45 Plug	I	Officer Desk Microphone	RJ45 Plug	I
23-8023	Liberty 24-4P-L5-EN-BLU	0.219in/5.57mm	GPS System Rack Location	RJ45 Plug	I	Officer Desk Microphone	RJ45 Plug	I
24-8024	Liberty 24-4P-L5-EN-BLU	0.219in/5.57mm	GPS System Rack Location	RJ45 Plug	I	Officer Desk Microphone	RJ45 Plug	I
25-8025	Liberty 24-4P-L5-EN-BLU	0.219in/5.57mm	GPS System Rack Location	RJ45 Plug	I	Officer Desk Microphone	RJ45 Plug	I

Date	Revisions	By

707 Platinum Point, Suite 2001
Lake Mary, FL 32746
Phone - (407)936-7300
Fax (407)833-4990
www.genproj.com
solutions@genproj.com

GENERAL PROJECTION SYSTEMS

WIRE RUNS LIST 2 OF 3

U.S. DEPARTMENT OF STATE
(NIV) Port Au Prince, Haiti

DRAWN BY: GUS
ENGINEERED BY: VA
DATE DRAWN: JUNE 13, 2014
SCALE: AS NOTED
PROGRAMMING: CS
DRAWING NO.: AV9.1

General Projection Systems Inc. hereby reserves its common law copyrights and other copyrights in these plans, ideas, and designs. These ideas, designs and plans are not to be copied or changed in any manner or form whatsoever, nor are they to be assigned to any third party without first obtaining the express written permission from General Projection Systems Inc.

U.S. Department of State

Haiti/U.S. Embassy (NIV) GPS Microphone System

Wire Runs List for 25 WINDOWS

Revision Date:

Print Date

Wire Number	Wire Type	Cable O.D.	Equipment From	Connector	Connector Type	Equipment To	Connector To	Connector Type
1101	Liberty 24-4P-L5-EN-BLU	0.219in/5.57mm	GPS System Rack Location	RJ45 Plug	I	GPS System Rack Location	RJ45 Plug	I
1102	Liberty 24-4P-L5-EN-BLU	0.219in/5.57mm	GPS System Rack Location	RJ45 Plug	I	GPS System Rack Location	RJ45 Plug	I
1103	Liberty 24-4P-L5-EN-BLU	0.219in/5.57mm	GPS System Rack Location	RJ45 Plug	I	GPS System Rack Location	RJ45 Plug	I
1104	Liberty 24-4P-L5-EN-BLU	0.219in/5.57mm	GPS System Rack Location	RJ45 Plug	I	GPS System Rack Location	RJ45 Plug	I
1105	Liberty 24-4P-L5-EN-BLU	0.219in/5.57mm	GPS System Rack Location	RJ45 Plug	I	GPS System Rack Location	RJ45 Plug	I
1106	Liberty 24-4P-L5-EN-BLU	0.219in/5.57mm	GPS System Rack Location	RJ45 Plug	I	GPS System Rack Location	RJ45 Plug	I
2001	Liberty 16-2C-HT	0.191in/4.85mm	GPS System Rack Location	Biamp Phoenix Connector	J	GPS System Rack Location	Crown Input Connection	K
2002	Liberty 16-2C-HT	0.191in/4.85mm	GPS System Rack Location	Biamp Phoenix Connector	J	GPS System Rack Location	Crown Input Connection	K
2003	Liberty 16-2C-HT	0.191in/4.85mm	GPS System Rack Location	Amplifier Screw Terminal	G	Lobby Speaker #1	JBL Phoenix Connection	L
2004	Liberty 16-2C-HT	0.191in/4.85mm	GPS System Rack Location	Amplifier Screw Terminal	G	Lobby Speaker #13	JBL Phoenix Connection	L
3001	Liberty LLINX-U	0.246in/6.25mm	Crestron C2N-HBLOCK	Crestron Phoenix Connection	D	Crestron APAD Box #1	Crestron Phoenix Connector	D
3002	Liberty LLINX-U	0.246in/6.25mm	Crestron C2N-HBLOCK	Crestron Phoenix Connection	D	Crestron APAD Box #2	Crestron Phoenix Connector	D
3003	Liberty LLINX-U	0.246in/6.25mm	Crestron C2N-HBLOCK	Crestron Phoenix Connection	D	Crestron APAD Box #3	Crestron Phoenix Connector	D
3004	Liberty LLINX-U	0.246in/6.25mm	Crestron C2N-HBLOCK	Crestron Phoenix Connection	D	Crestron APAD Box #4	Crestron Phoenix Connector	D
3005	Liberty LLINX-U	0.246in/6.25mm	Crestron C2N-HBLOCK	Crestron Phoenix Connection	D	Crestron APAD Box #5	Crestron Phoenix Connector	D
3006	Liberty LLINX-U	0.246in/6.25mm	Crestron C2N-HBLOCK	Crestron Phoenix Connection	D	Crestron APAD Box #6	Crestron Phoenix Connector	D
3007	Liberty LLINX-U	0.246in/6.25mm	Crestron C2N-HBLOCK	Crestron Phoenix Connection	D	Crestron APAD Box #7	Crestron Phoenix Connector	D
3008	Liberty LLINX-U	0.246in/6.25mm	Crestron C2N-HBLOCK	Crestron Phoenix Connection	D	Crestron APAD Box #8	Crestron Phoenix Connector	D
3009	Liberty LLINX-U	0.246in/6.25mm	Crestron C2N-HBLOCK	Crestron Phoenix Connection	D	Crestron APAD Box #9	Crestron Phoenix Connector	D
3010	Liberty LLINX-U	0.246in/6.25mm	Crestron C2N-HBLOCK	Crestron Phoenix Connection	D	Crestron APAD Box #10	Crestron Phoenix Connector	D
3011	Liberty LLINX-U	0.246in/6.25mm	Crestron C2N-HBLOCK	Crestron Phoenix Connection	D	Crestron APAD Box #11	Crestron Phoenix Connector	D
3012	Liberty LLINX-U	0.246in/6.25mm	GPS System Rack Location	Crestron Phoenix Connection	D	Crestron APAD Box #12	Crestron Phoenix Connector	D
3013	Liberty LLINX-U	0.246in/6.25mm	GPS System Rack Location	Crestron Phoenix Connection	D	Crestron APAD Box #13	Crestron Phoenix Connector	D
3014	Liberty LLINX-U	0.246in/6.25mm	GPS System Rack Location	Crestron Phoenix Connection	D	Crestron APAD Box #15	Crestron Phoenix Connector	D
3015	Liberty LLINX-U	0.246in/6.25mm	GPS System Rack Location	Crestron Phoenix Connection	D	Crestron APAD Box #15	Crestron Phoenix Connector	D
3016	Liberty LLINX-U	0.246in/6.25mm	GPS System Rack Location	Crestron Phoenix Connection	D	Crestron APAD Box #16	Crestron Phoenix Connector	D
3017	Liberty LLINX-U	0.246in/6.25mm	GPS System Rack Location	Crestron Phoenix Connection	D	Crestron APAD Box #17	Crestron Phoenix Connector	D
3018	Liberty LLINX-U	0.246in/6.25mm	GPS System Rack Location	Crestron Phoenix Connection	D	Crestron APAD Box #18	Crestron Phoenix Connector	D
3019	Liberty LLINX-U	0.246in/6.25mm	GPS System Rack Location	Crestron Phoenix Connection	D	Crestron APAD Box #19	Crestron Phoenix Connector	D
3020	Liberty LLINX-U	0.246in/6.25mm	GPS System Rack Location	Crestron Phoenix Connection	D	Crestron APAD Box #20	Crestron Phoenix Connector	D
3021	Liberty LLINX-U	0.246in/6.25mm	GPS System Rack Location	Crestron Phoenix Connection	D	Crestron APAD Box #21	Crestron Phoenix Connector	D
3022	Liberty LLINX-U	0.246in/6.25mm	GPS System Rack Location	Crestron Phoenix Connection	D	Crestron APAD Box #22	Crestron Phoenix Connector	D
3023	Liberty LLINX-U	0.246in/6.25mm	GPS System Rack Location	Crestron Phoenix Connection	D	Crestron APAD Box #23	Crestron Phoenix Connector	D
3024	Liberty LLINX-U	0.246in/6.25mm	GPS System Rack Location	Crestron Phoenix Connection	D	Crestron APAD Box #24	Crestron Phoenix Connector	D
3025	Liberty LLINX-U	0.246in/6.25mm	GPS System Rack Location	Crestron Phoenix Connection	D	Crestron APAD Box #25	Crestron Phoenix Connector	D
1-7001	Liberty 22-2P-SHEX-YEL	0.260in/6.60mm	GPS System Rack Location	Biamp Phoenix Connector	B	Officer Headset #1	XLR3	C
2-7002	Liberty 22-2P-SHEX-YEL	0.260in/6.60mm	GPS System Rack Location	Biamp Phoenix Connector	B	Officer Headset #2	XLR3	C
3-7003	Liberty 22-2P-SHEX-YEL	0.260in/6.60mm	GPS System Rack Location	Biamp Phoenix Connector	B	Officer Headset #3	XLR3	C
4-7004	Liberty 22-2P-SHEX-YEL	0.260in/6.60mm	GPS System Rack Location	Biamp Phoenix Connector	B	Officer Headset #4	XLR3	C
5-7005	Liberty 22-2P-SHEX-YEL	0.260in/6.60mm	GPS System Rack Location	Biamp Phoenix Connector	B	Officer Headset #5	XLR3	C
6-7006	Liberty 22-2P-SHEX-YEL	0.260in/6.60mm	GPS System Rack Location	Biamp Phoenix Connector	B	Officer Headset #6	XLR3	C
7-7007	Liberty 22-2P-SHEX-YEL	0.260in/6.60mm	GPS System Rack Location	Biamp Phoenix Connector	B	Officer Headset #7	XLR3	C
8-7008	Liberty 22-2P-SHEX-YEL	0.260in/6.60mm	GPS System Rack Location	Biamp Phoenix Connector	B	Officer Headset #8	XLR3	C
9-7009	Liberty 22-2P-SHEX-YEL	0.260in/6.60mm	GPS System Rack Location	Biamp Phoenix Connector	B	Officer Headset #9	XLR3	C
10-7010	Liberty 22-2P-SHEX-YEL	0.260in/6.60mm	GPS System Rack Location	Biamp Phoenix Connector	B	Officer Headset #10	XLR3	C
11-7011	Liberty 22-2P-SHEX-YEL	0.260in/6.60mm	GPS System Rack Location	Biamp Phoenix Connector	B	Officer Headset #11	XLR3	C
12-7012	Liberty 22-2P-SHEX-YEL	0.260in/6.60mm	GPS System Rack Location	Biamp Phoenix Connector	B	Officer Headset #12	XLR3	C
13-7013	Liberty 22-2P-SHEX-YEL	0.260in/6.60mm	GPS System Rack Location	Biamp Phoenix Connector	B	Officer Headset #13	XLR3	C
14-7014	Liberty 22-2P-SHEX-YEL	0.260in/6.60mm	GPS System Rack Location	Biamp Phoenix Connector	B	Officer Headset #14	XLR3	C
15-7015	Liberty 22-2P-SHEX-YEL	0.260in/6.60mm	GPS System Rack Location	Biamp Phoenix Connector	B	Officer Headset #15	XLR3	C
16-7016	Liberty 22-2P-SHEX-YEL	0.260in/6.60mm	GPS System Rack Location	Biamp Phoenix Connector	B	Officer Headset #16	XLR3	C
17-7017	Liberty 22-2P-SHEX-YEL	0.260in/6.60mm	GPS System Rack Location	Biamp Phoenix Connector	B	Officer Headset #17	XLR3	C
18-7018	Liberty 22-2P-SHEX-YEL	0.260in/6.60mm	GPS System Rack Location	Biamp Phoenix Connector	B	Officer Headset #18	XLR3	C
19-7019	Liberty 22-2P-SHEX-YEL	0.260in/6.60mm	GPS System Rack Location	Biamp Phoenix Connector	B	Officer Headset #19	XLR3	C
20-7020	Liberty 22-2P-SHEX-YEL	0.260in/6.60mm	GPS System Rack Location	Biamp Phoenix Connector	B	Officer Headset #20	XLR3	C
21-7021	Liberty 22-2P-SHEX-YEL	0.260in/6.60mm	GPS System Rack Location	Biamp Phoenix Connector	B	Officer Headset #21	XLR3	C
22-7022	Liberty 22-2P-SHEX-YEL	0.260in/6.60mm	GPS System Rack Location	Biamp Phoenix Connector	B	Officer Headset #22	XLR3	C
23-7023	Liberty 22-2P-SHEX-YEL	0.260in/6.60mm	GPS System Rack Location	Biamp Phoenix Connector	B	Officer Headset #23	XLR3	C
24-7024	Liberty 22-2P-SHEX-YEL	0.260in/6.60mm	GPS System Rack Location	Biamp Phoenix Connector	B	Officer Headset #24	XLR3	C
25-7025	Liberty 22-2P-SHEX-YEL	0.260in/6.60mm	GPS System Rack Location	Biamp Phoenix Connector	B	Officer Headset #25	XLR3	C

*** Important Notes:**

1. Cable specified to be a guideline. Exact cable must meet minimum spec as cable called out.
2. Cable that is substituted should be approved by General Projection Systems before being used in the system.
3. All cable is non-plenum. Electrician to use plenum cable where required by local codes.

Date	Revisions	By

707 Platinum Point, Suite 2001
Lake Mary, FL 32746
Phone - (407)936-7300
Fax (407)833-4990
www.genproj.com
solutions@genproj.com

GENERAL PROJECTION SYSTEMS

WIRE RUNS LIST 3 OF 3

U.S. DEPARTMENT OF STATE
(NIV) Port Au Prince, Haiti

DRAWN BY: GUS
ENGINEERED BY: VA
DATE DRAWN: JUNE 13, 2014
SCALE: AS NOTED
PROGRAMMING: CS
DRAWING NO.: AV9.2

General Projection Systems Inc. hereby reserves its common law copyrights and other copyrights in these plans, ideas, and designs. These ideas, designs and plans are not to be copied or changed in any manner or form whatsoever, nor are they to be assigned to any third party without first obtaining the express written permission from General Projection Systems Inc.