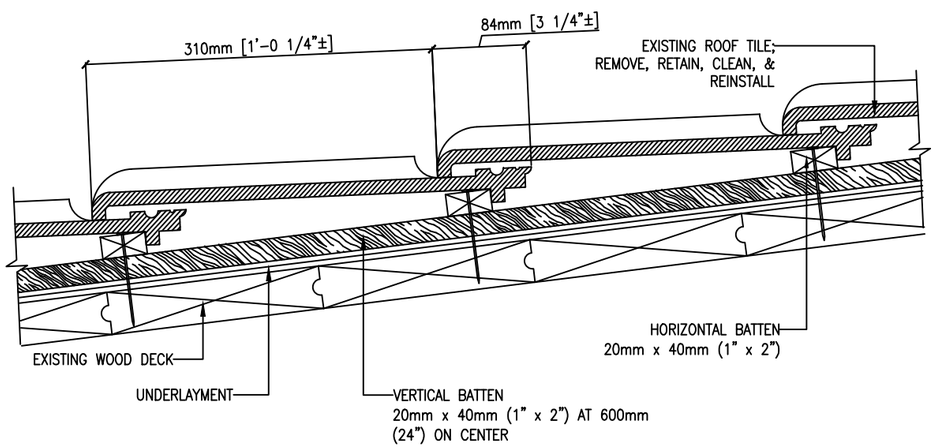

1 A04 TYPICAL TILE ROOF ASSEMBLY
SCALE: NOT TO SCALE

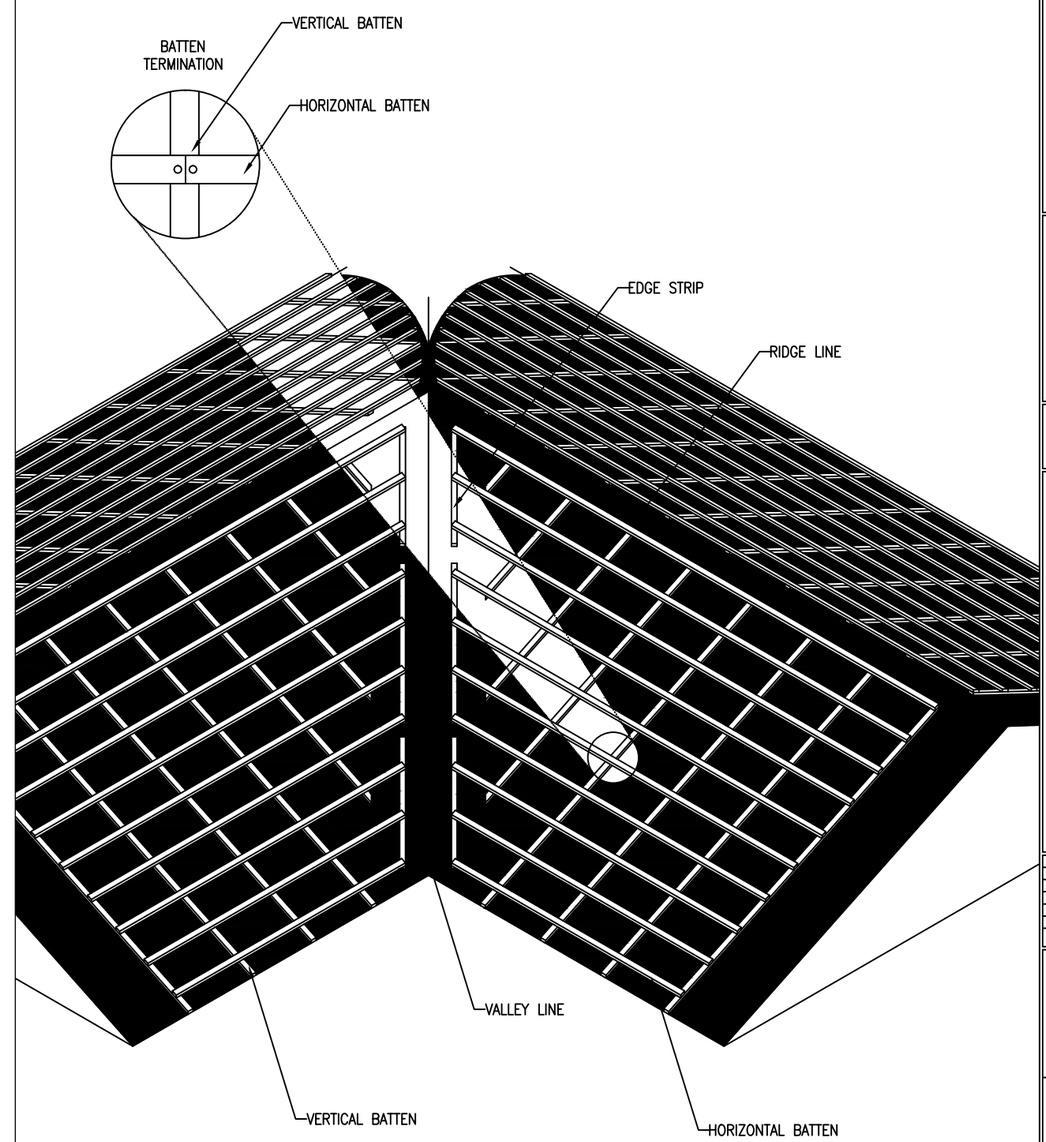

2 A04 COUNTERBATTEN INSTALLATION SYSTEM
SCALE: NOT TO SCALE

United States Department of State
OFFICE OF OVERSEAS BUILDINGS OPERATIONS
Washington, D.C.

WARNING: This document is the property of the U.S. Government. Further reproduction and/or distribution is prohibited without the express written permission of: Office of Overseas Buildings Operations, U.S. Department of State, Washington, DC, 20522-0620. Information on this document is not to be altered except with the written approval of the individual whose seal appears hereon.

Rev Number	Description	Date
Revisions		

Release For Construction:
A/OBO/PE/PM | A/OBO/PE/RDE

Drawing Title
DETAILS

OBO Project Number | Drawing Scale N.T.S. | Phase
CADD File Name | CADD Plot Scale | ☐ CONCEPT ☐ 30% ☐ 60% ☐ 90% ☐ 100% ☒ FINAL

Date | Sheet Number
Drawn By
Checked By
Project Number
Classification