*Embassy of the United States of America*
*Athens, Greece*

April 28, 2016

Dear prospective Quoter,

SUBJECT: Solicitation Number SGR100-16-Q-0034

The Embassy of the United States of America invites you to submit a quotation for the **Replacement of Roof** at a U.S. Government-Owned Residence located at P. Psychiko.

Your quotation must be submitted electronically by email with the subject line "**Quotation SGR100-16-Q-0034 Enclosed**" to Athensoffers@state.gov on or before **12:00 noon** (Athens Time) on **May 20, 2016.** You may also elect to submit your quotation in hard copy marked for the attention of the **"Contracting Officer – Quotation SGR100-16-Q-0034 Enclosed"**, which may be delivered to the Embassy Gate on Doryleou Street, on or before **12:00 noon** (Athens Time) on **May 20, 2016**. No quotation will be accepted after the cut-off date and time.

Complete Standard Form 18, as applicable, and have the form signed by an authorized representative of your company, or the quotation may be considered unacceptable and may be rejected.

In order for a quotation to be considered, you must also complete and submit the following:

1. Section A and Attachment 3, Proposal Breakdown by Divisions;
2. Section L, Representations and Certifications;
3. Bar Chart illustrating sequence of work to be performed;
4. Additional information as required in Section J, Quotation Information.

The contract will be a firm fixed price contract, with no adjustment for any escalation in costs or prices of labor or materials. Each quoter will be responsible for determining the amount of labor and materials that will be required to complete the project, and for pricing its quotation accordingly.

The construction completion time is **fifty seven (57) calendar days**, after receiving the Notice to Proceed**.** In the event of an unauthorized or unexcused delay in completing the project, liquidated damages in the amount of **€100.00 per calendar day** will be assessed until substantial completion of the project is achieved.

The Contracting Officer reserves the right to reject any and all quotations and to waive any informality in quotations received. In addition, the Embassy reserves the right to establish a competitive range of one or more quoters and to conduct further negotiations concerning price and other terms before awarding the contract, or to award without discussions.

Please direct any questions regarding this solicitation in writing to Athprocurement@state.gov. Questions must be written in English, and may be sent by **13.00 hours local time, on May 9, 2016.**

Sincerely,

Carolyn K. Calderon
Contracting Officer

Enclosure as stated

| REQUEST FOR QUOTATIONS *(THIS IS NOT AN ORDER)* | THIS RFQ [ ] IS [X] IS NOT A SMALL BUSINESS-SMALL PURCHASE SET-ASIDE (52.219-4) | PAGE 1 | OF | PAGES 39 |
|---|---|---|---|---|

| 1. REQUEST NO. | 2. DATE ISSUED | 3. REQUISITION/PURCHASE REQUEST NO. | 4. CERT. FOR NAT. DEF. UNDER BDSA REG. 2 AND/OR DMS REG. 1 | RATING |
|---|---|---|---|---|
| **SGR100-16-Q-0034** | **04/28/2016** | **PR5227260** | | |

5A. ISSUED BY **U.S. Embassy Athens – GSO/Procurement**
**91 Vas. Sofias Avenue**
**101 60 ATHENS**

6. DELIVER BY *(Date)*

5B. FOR INFORMATION CALL: *(Name and telephone no.) (No collect calls*

| NAME | TELEPHONE NUMBER | |
|---|---|---|
| | AREA CODE | NUMBER |
| **Mr. Apostolos Mouyios** | | **210-720-2296** |

7. DELIVERY
FOB DESTINATION OTHER *(See Schedule)*

8. TO:

| a. NAME | b. COMPANY |
|---|---|
| c. STREET ADDRESS | |
| d. CITY | e. STATE / f. ZIP CODE |

9. DESTINATION

| a. NAME OF CONSIGNEE | |
|---|---|
| b. STREET ADDRESS | |
| c. CITY | |
| d. STATE | e. ZIP CODE |

10. PLEASE FURNISH QUOTATIONS TO THE ISSUING OFFICE IN BLOCK 5A ON OR BEFORE CLOSE OF BUSINESS *(Date)*
**May 20, 2016 at 12.00 hrs.**

**IMPORTANT:** This is a request for information, and quotations furnished are not offers. If you are unable to quote, please so indicate on this form and return it to the address in Block 5A. This request does not commit the Government to pay any costs incurred in the preparation of the submission of this quotation or to contract for supplies or services. Supplies are of domestic origin unless otherwise indicated by quoter. Any representations and/or certifications attached to this Request for Quotations must be completed by the quoter

11. SCHEDULE *(Include applicable Federal, State and local taxes)*

| ITEM NO. (a) | SUPPLIES/SERVICES (b) | QUANTITY (c) | UNIT (d) | UNIT PRICE (e) | AMOUNT (f) |
|---|---|---|---|---|---|
| | **Replacement of roof at a US Government-Owned Residence located in P. Psychiko, as per attached.**<br><br>**ORAL OR FACSIMILE QUOTATIONS WILL NOT BE ACCEPTED.** | **1** | **ALL** | | **Euros** |

| 12 DISCOUNT FOR PROMPT PAYMENT | a. 10 CALENDAR DAYS % | b. 20 CALENDAR DAYS % | c. 30 CALENDAR DAYS % | d. CALENDAR DAYS NUMBER | % |
|---|---|---|---|---|---|

NOTE: Additional provisions and representations [ ] are [ ] are not attached

| 13 NAME AND ADDRESS OF QUOTER | 14 SIGNATURE OF PERSON AUTHORIZED TO SIGN QUOTATION | 15 DATE OF QUOTATION |
|---|---|---|
| a. NAME OF QUOTER | | |
| b. STREET ADDRESS | 16. SIGNER | |
| c. COUNTY | a. NAME (Type or print) | b. TELEPHONE |
| d. CITY / e. STATE / f. ZIP CODE | c. TITLE (Type or print) | AREA CODE<br>NUMBER |

AUTHORIZED FOR LOCAL REPRODUCTION
Previous edition not usable

STANDARD FORM 18 (Rev. 6-95)
Prescribed by GSA-FAR (48 CFR)

**TABLE OF CONTENTS**

SF-18COVER SHEET
A. PRICE
B. SCOPE OF WORK
C. PACKAGING AND MARKING
D. INSPECTION AND ACCEPTANCE
E. DELIVERIES OR PERFORMANCE
F. ADMINISTRATIVE DATA
G. SPECIAL REQUIREMENTS
H. CLAUSES
I. LIST OF ATTACHMENTS
J. QUOTATION INFORMATION
K. EVALUATION CRITERIA
L. REPRESENTATIONS, CERTIFICATIONS, AND OTHER STATEMENTS OF OFFERORS OR QUOTERS

ATTACHMENTS:
Attachment 1: Performance and Guaranty Bond
Attachment 2: Payment Bond
Attachment 3: Breakdown of Price by Divisions of Specifications
Attachment 4: Statement of Work

REQUEST FOR QUOTATIONS - CONSTRUCTION

A. PRICE

The Contractor shall complete all work, including furnishing all labor, material, equipment and services required under this purchase order for the following firm fixed price and within the time specified. This price shall include all labor, materials, all insurances, overhead and profit.

| | |
|---|---|
| Total Price (including all labor, materials, overhead and profit) | Euros |

A.1 VALUE ADDED TAX

**VALUE ADDED TAX (VAT). The Government will not reimburse the Contractor for VAT under this contract. The Contractor shall not include a line for VAT on Invoices as the U.S. Embassy has a tax exemption certificate with the host government.**

B. SCOPE OF WORK

The character and scope of the work are set forth in the contract. The Contractor shall furnish and install all materials required by this contract.

In case of differences between small and large-scale drawings, the latter will govern. Where a portion of the work is drawn in detail and the remainder of the work is indicated in outline, the parts drawn in detail shall apply also to all other portions of the work.

C. PACKAGING AND MARKING

Mark materials delivered to the site as follows:

United States Embassy
Attention: Regional Security Office
91 Vas. Sofias Avenue
Athens

D. INSPECTION AND ACCEPTANCE

The COR, or his/her authorized representatives, will inspect from time to time the services being performed and the supplies furnished to determine whether work is being performed in a satisfactory manner, and that all supplies are of acceptable quality and standards.

The Contractor shall be responsible for any countermeasures or corrective action, within the scope of this contract, which may be required by the Contracting Officer as a result of such inspection.

D.1 SUBSTANTIAL COMPLETION

(a) "*Substantial Completion*" means the stage in the progress of the work as determined and certified by the Contracting Officer in writing to the Contractor, on which the work (or a portion designated by the Government) is sufficiently complete and satisfactory. Substantial completion means that the property may be occupied or used for the purpose for which it is intended, and only minor items such as touch-up, adjustments, and minor replacements or installations remain to be completed or corrected which:

(1) do not interfere with the intended occupancy or utilization of the work, and
(2) can be completed or corrected within the time period required for final completion.

(b) The "date of substantial completion" means the date determined by the Contracting Officer or authorized Government representative as of which substantial completion of the work has been achieved.

Use and Possession upon Substantial Completion - The Government shall have the right to take possession of and use the work upon substantial completion. Upon notice by the Contractor that the work is substantially complete (a Request for Substantial Completion) and an inspection by the Contracting Officer or an authorized Government representative (including any required tests), the Contracting Officer shall furnish the Contractor a Certificate of Substantial Completion. The certificate will be accompanied by a Schedule of Defects listing items of work remaining to be performed, completed or corrected before final completion and acceptance. Failure of the Contracting Officer to list any item of work shall not relieve the Contractor of responsibility for complying with the terms of the contract. The Government's possession or use upon substantial completion shall not be deemed an acceptance of any work under the contract.

D.2 FINAL COMPLETION AND ACCEPTANCE

D.2.1 "Final completion and acceptance" means the stage in the progress of the work as determined by the Contracting Officer and confirmed in writing to the Contractor, at which all work required under the contract has been completed in a satisfactory manner, subject to the discovery of defects after final completion, and except for items specifically excluded in the notice of final acceptance.

D.2.2 The "*date of final completion and acceptance*" means the date determined by the Contracting Officer when final completion of the work has been achieved, as indicated by written notice to the Contractor.

D.2.3 FINAL INSPECTION AND TESTS. The Contractor shall give the Contracting Officer at least five (5) days advance written notice of the date when the work will be fully completed and ready for final inspection and tests. Final inspection and tests will be started not later than the date specified in the notice unless the Contracting Officer determines that the work is not ready for final inspection and so informs the Contractor.

D.2.4 FINAL ACCEPTANCE. If the Contracting Officer is satisfied that the work under the contract is complete (with the exception of continuing obligations), the Contracting Officer shall issue to the Contractor a notice of final acceptance and make final payment upon:

- Satisfactory completion of all required tests,
- A final inspection that all items by the Contracting Officer listed in the Schedule of Defects have been completed or corrected and that the work is finally complete (subject to the discovery of defects after final completion), and
- Submittal by the Contractor of all documents and other items required upon completion of the work, including a final request for payment (Request for Final Acceptance).

E. DELIVERIES OR PERFORMANCE

52.211-10 COMMENCEMENT, PROSECUTION, AND COMPLETION OF WORK (APR 1984)

The Contractor shall be required to:

(a) commence work under this contract within **ten (10)** calendar days after the date the Contractor receives the notice to proceed,
(b) prosecute the work diligently, and,
(c) complete the entire work ready for use not later than **fifty seven eight (57)** calendar days after the Notice to Proceed.

The time stated for completion shall include final cleanup of the premises.

52.211-12 LIQUIDATED DAMAGES - CONSTRUCTION (SEPT 2000)

(a) If the Contractor fails to complete the work within the time specified in the contract, or any extension, the Contractor shall pay liquidated damages to the Government in the amount of **Euros 100.00** for each calendar day of delay until the work is completed or accepted.

(b) If the Government terminates the Contractor's right to proceed, liquidated damages will continue to accrue until the work is completed. These liquidated damages are in addition to excess costs of repurchase under the Default clause.

CONTRACTOR'S SUBMISSION OF CONSTRUCTION SCHEDULES

(a) The time for submission of the schedules referenced in FAR 52.236-15, "Schedules for Construction Contracts", paragraph (a), is hereby modified to reflect the due date for submission as "Ten (10) calendar days after receipt of an executed contract".

(b) These schedules shall include the time by which shop drawings, product data, samples and other submittals required by the contract will be submitted for approval.

(c) The Contractor shall revise such schedules (1) to account for the actual progress of the work, (2) to reflect approved adjustments in the performance schedule, and (3) as required by the Contracting Officer to achieve coordination with work by the Government and any separate contractors used by the Government. The Contractor shall submit a schedule, which sequences work so as to minimize disruption at the job site.

(d) All deliverables shall be in the English language and any system of dimensions (English or metric) shown shall be consistent with that used in the contract. No extension of time shall be allowed due to delay by the Government in approving such deliverables if the Contractor has failed to act promptly and responsively in submitting its deliverables. The Contractor shall identify each deliverable as required by the contract.

(e) Acceptance of Schedule: When the Government has accepted any time schedule; it shall be binding upon the Contractor. The completion date is fixed and may be extended only by a written contract modification signed by the Contracting Officer. Acceptance or approval of any schedule or revision thereof by the Government shall not:

(1) Extend the completion date or obligate the Government to do so,
(2) Constitute acceptance or approval of any delay, or

(3) Excuse the Contractor from or relieve the Contractor of its obligation to maintain the progress of the work and achieve final completion by the established completion date.

NOTICE OF DELAY

If the Contractor receives a notice of any change in the work, or if any other conditions arise which are likely to cause or are actually causing delays which the Contractor believes may result in late completion of the project, the Contractor shall notify the Contracting Officer. The Contractor's notice shall state the effect, if any, of such change or other conditions upon the approved schedule, and shall state in what respects, if any, the relevant schedule or the completion date should be revised. The Contractor shall give such notice promptly, not more than ten (10) days after the first event giving rise to the delay or prospective delay. Only the Contracting Officer may make revisions to the approved time schedule.

NOTICE TO PROCEED

(a) After receiving and accepting any bonds or evidence of insurance, the Contracting Officer will provide the Contractor a Notice to Proceed. The Contractor must then prosecute the work, commencing and completing performance not later than the time period established in the contract.

(b) It is possible that the Contracting Officer may elect to issue the Notice to Proceed before receipt and acceptance of any bonds or evidence of insurance. Issuance of a Notice to Proceed by the Government before receipt of the required bonds or insurance certificates or policies shall not be a waiver of the requirement to furnish these documents.

WORKING HOURS

All work shall be performed during **08:30-16:30 hours, Monday to Friday** except Saturdays, Sundays and the Holidays identified below. Other hours, if requested by the Contractor, may be approved by the Contracting Officer's Representative (COR). The Contractor shall give 24 hours in advance to COR who will consider any deviation from the hours identified above. Changes in work hours, initiated by the Contractor, will not be a cause for a price increase.

| DELIVERABLES - The following items shall be delivered under this contract: | | | |
|---|---|---|---|
| Description | Quantity | Deliver Date | Deliver To |
| Section G. Securities/Insurance | 1 | 10 days after award | CO |
| Section E. Construction Schedule | 1 | 10 days after award | COR |
| Section G. Personnel Biographies | 1 | 10 days after award | COR |
| Section F. Payment Request | 1 | Last calendar day of each month | COR |
| Section D. Request for Substantial Completion | 1 | 15 days before inspection | COR |
| Section D. Request for Final Acceptance | 1 | 5 days before inspection | COR |

F. ADMINISTRATIVE DATA

652.242-70 CONTRACTING OFFICER'S REPRESENTATIVE (COR) (AUG 1999)

(a) The Contracting Officer may designate in writing one or more Government employees, by name or position title, to take action for the Contracting Officer under this contract. Each designee shall be identified as a Contracting Officer's Representative (COR). Such designation(s) shall specify the scope and limitations of the authority so delegated; provided, that the designee shall not change the terms or conditions of the contract, unless the COR is a warranted Contracting Officer and this authority is delegated in the designation.

(b) The COR for this contract is the **Facility Supervisor**.

Payment: The Contractor's attention is directed to Section H, 52.232-5, "Payments Under Fixed-Price Construction Contracts". The following elaborates on the information contained in that clause.

Requests for payment, may be made no more frequently than monthly. Payment requests shall cover the value of labor and materials completed and in place, including a prorated portion of overhead and profit.

After receipt of the Contractor's request for payment, and on the basis of an inspection of the work, the Contracting Officer shall make a determination as to the amount, which is then due. If the Contracting Officer does not approve payment of the full amount applied for, less the retainage allowed by in 52.232-5, the Contracting Officer shall advise the Contractor as to the reasons.

Under the authority of 52.232-27(a), the 14 day period identified in FAR 52.232-27(a)(1)(i)(A) is hereby changed to 30 days.

The electronic invoicing is the preferred means of submitting invoices. The contractor is encouraged to create and submit electronic invoices for this contract, in lieu of paper copies, to ATHFMCVOUCHER@state.gov. Electronic invoices shall be submitted to the designated billing office specified below.

Financial Management Office
Contract Number SGR100- (***To be provided upon award***)
U.S. Embassy Athens
91, Vas. Sofias Avenue
101 60 ATHENS

Payment shall be made in local currency by Electronic Funds Transfer (EFT) within 30 calendar days after receipt of the proper statement. Payments may be made directly to any bank account established by the Contractor to receive payments. If there is a wire fee for the wire transfer, this fee is the responsibility of the beneficiary. Inquiries pertaining to payment will only be addressed to telephone number is 210-720-2287.

G. SPECIAL REQUIREMENTS

G.1.0 PERFORMANCE/PAYMENT PROTECTION - The Contractor shall furnish (1) a performance and guaranty bond and a payment bond on forms provided by and from sureties acceptable to the Government, each in the amount of 20% of the contract price, or (2) comparable alternate performance security approved by the Government. The required performance and payment securities shall remain in effect in the full amount required until the final acceptance of the project by the

Government, at which time the penal sum of the performance security only shall be reduced to 10% of the contract price. The performance security shall remain in effect for one year after the date of final completion and acceptance, and the Contractor shall pay any premium required for the entire period of coverage. The requirement for payment security terminates at final acceptance.

G.1.1 The Contractor shall provide the information required by the paragraph above within ten (10) calendar days after award. Failure to timely submit the required security may result in rescinding or termination of the contract by the Government. If the contract is terminated, the Contractor will be liable for those costs as described in FAR 52.249-10, Default (Fixed-Price Construction), which is included in this purchase order.

G.1.2 The bonds or alternate performance security shall guarantee the Contractor's execution and completion of the work within the contract time. This security shall also guarantee the correction of any defects after completion, the payment of all wages and other amounts payable by the Contractor under its subcontracts or for labor and materials, and the satisfaction or removal of any liens or encumbrances placed on the work.

G.1.3 The required securities shall remain in effect in the full amount required until final acceptance of the project by the Government. Upon final acceptance, the penal sum of the performance security shall be reduced to 10% of the contract price. The security shall remain in effect for one year after the date of final completion and acceptance, and the Contractor shall pay any premium required for the entire period of coverage.

G.2.0 INSURANCE - The Contractor is required by FAR 52.228-5, "Insurance - Work on a Government Installation" to provide whatever insurance is legally necessary. The Contractor shall at its own expense provide and maintain during the entire performance period the following insurance amounts:

G.2.1 GENERAL LIABILITY (includes premises/operations, collapse hazard, products, completed operations, contractual, independent contractors, broad form property damage, personal injury):

| (1) BODILY INJURY AND PROPERTY DAMAGE, ON OR OFF THE SITE | |
|---|---|
| Per Occurrence | **Euros 17,608.00** |
| Cumulative | **Euros 44, 020.00** |

G.2.2 The foregoing types and amounts of insurance are the minimums required. The Contractor shall obtain any other types of insurance required by local law or that are ordinarily or customarily obtained in the location of the work. The limit of such insurance shall be as provided by law or sufficient to meet normal and customary claims.

G.2.3 The Contractor agrees that the Government shall not be responsible for personal injuries or for damages to any property of the Contractor, its officers, agents, servants, and employees, or any other person, arising from and incident to the Contractor's performance of this contract. The Contractor shall hold harmless and indemnify the Government from any and all claims arising therefrom, except in the instance of gross negligence on the part of the Government.

G.2.4 The Contractor shall obtain adequate insurance for damage to, or theft of, materials and equipment in insurance coverage for loose transit to the site or in storage on or off the site.

G.2.5 The general liability policy required of the Contractor shall name "the United States of America, acting by and through the Department of State", as an additional insured with respect to operations performed under this contract.

G.3.0 DOCUMENT DESCRIPTIONS

G.3.1 SUPPLEMENTAL DOCUMENTS: The Contracting Officer shall furnish from time to time such detailed drawings and other information as is considered necessary, in the opinion of the Contracting Officer, to interpret, clarify, supplement, or correct inconsistencies, errors or omissions in the Contract documents, or to describe minor changes in the work not involving an increase in the contract price or extension of the contract time. The Contractor shall comply with the requirements of the supplemental documents, and unless prompt objection is made by the Contractor within 20 days, their issuance shall not provide for any claim for an increase in the Contract price or an extension of contract time.

G.3.1.1. RECORD DOCUMENTS. The Contractor shall maintain at the project site:

(1) a current marked set of Contract drawings and specifications indicating all interpretations and clarification, contract modifications, change orders, or any other departure from the contract requirements approved by the Contracting Officer; and,
(2) a complete set of record shop drawings, product data, samples and other submittals as approved by the Contracting Officer.

G.3.1.2 . "As-Built" Documents: After final completion of the work, but before final acceptance thereof, the Contractor shall provide:

(1) a complete set of "as-built" drawings, based upon the record set of drawings, marked to show the details of construction as actually accomplished; and,
(2) record shop drawings and other submittals, in the number and form as required by the specifications.

G.4.0 LAWS AND REGULATIONS - The Contractor shall, without additional expense to the Government, be responsible for complying with all laws, codes, ordinances, and regulations applicable to the performance of the work, including those of the host country, and with the lawful orders of any governmental authority having jurisdiction. Host country authorities may not enter the construction site without the permission of the Contracting Officer. Unless otherwise directed by the Contracting Officer, the Contractor shall comply with the more stringent of the requirements of such laws, regulations and orders and of the contract. In the event of a conflict between the contract and such laws, regulations and orders, the Contractor shall promptly advise the Contracting Officer of the conflict and of the Contractor's proposed course of action for resolution by the Contracting Officer.

G.4.1 The Contractor shall comply with all local labor laws, regulations, customs and practices pertaining to labor, safety, and similar matters, to the extent that such compliance is not inconsistent with the requirements of this contract.

G.4.2 The Contractor shall give written assurance to the Contracting Officer that all subcontractors and others performing work on or for the project have obtained all requisite licenses and permits.

G.4.3 The Contractor shall submit proper documentation and evidence satisfactory to the Contracting Officer of compliance with this clause.

G.5.0 CONSTRUCTION PERSONNEL - The Contractor shall maintain discipline at the site and at all times take all reasonable precautions to prevent any unlawful, riotous, or disorderly conduct by or among those employed at the site. The Contractor shall ensure the preservation of peace and protection of persons and property in the neighborhood of the project against such action. The Contracting Officer may require, in writing that the Contractor remove from the work any employee that the Contracting Officer deems incompetent, careless, insubordinate or otherwise objectionable, or whose continued employment on the project is deemed by the Contracting Officer to be contrary to the Government's interests.

G.5.1 If the Contractor has knowledge that any actual or potential labor dispute is delaying or threatens to delay the timely performance of this contract, the Contractor shall immediately give notice, including all relevant information, to the Contracting Officer.

G.5.2 After award, the Contractor has ten calendar days to submit to the Contracting Officer a list of workers and supervisors assigned to this project for the Government to conduct all necessary security checks. It is anticipated that security checks will take three to four weeks to perform. For each individual the list shall include:

**Complete application forms provided by the US Embassy**
**Copy of ID card**
**Passport**
**Greek Social Security Medical Book**
**Merchant Marine Seaman's book (if applicable)**
**Penal record of type A**
**Discharge papers (Greek Military service)**
**Pay book (Greek Armed Forces**

Failure to provide any of the above information may be considered grounds for rejection and/or resubmittal of the application. Once the Government has completed the security screening and approved the applicants a badge will be provided to the individual for access to the site. This badge may be revoked at any time due to the falsification of data, or misconduct on site.

G.5.3 The Contractor shall provide an English speaking supervisor on site at all times. This position is considered as key personnel under this purchase order.

G.6.0 Materials and Equipment - All materials and equipment incorporated into the work shall be new and for the purpose intended, unless otherwise specified. All workmanship shall be of good quality and performed in a skillful manner that will withstand inspection by the Contracting Officer.

G.7.0 SPECIAL WARRANTIES

G.7.1 Any special warranties that may be required under the contract shall be subject to the stipulations set forth in 52.246-21, "Warranty of Construction", as long as they are not in conflict.

G.7.2 The Contractor shall obtain and furnish to the Government all information required to make any subcontractor's, manufacturer's, or supplier's guarantee or warranty legally binding and effective. The Contractor shall submit both the information and the guarantee or warranty to the Government in sufficient time to permit the Government to meet any time limit specified in the guarantee or warranty, but not later than completion and acceptance of all work under this contract.

G.8.0 EQUITABLE ADJUSTMENTS

Any circumstance for which the contract provides an equitable adjustment that causes a change within the meaning of paragraph (a) of the "Changes" clause shall be treated as a change under that clause; provided, that the Contractor gives the Contracting Officer prompt written notice (within 20 days) stating:

(a) the date, circumstances, and applicable contract clause authorizing an equitable adjustment and
(b) that the Contractor regards the event as a changed condition for which an equitable adjustment is allowed under the contract

The Contractor shall provide written notice of a differing site condition within 10 calendar days of occurrence following FAR 52.236-2, Differing Site Conditions.

G.9.0 ZONING APPROVALS AND PERMITS

The Government shall be responsible for:

- obtaining proper zoning or other land use control approval for the project
- obtaining the approval of the Contracting Drawings and Specifications
- paying fees due for the foregoing; and,
- for obtaining and paying for the initial building permits.

H. CLAUSES

This contract incorporates one or more clauses by reference, with the same force and effect as if they were given in full text. Upon request, the Contracting Officer will make their full text available. Also, the full text of a clause may be accessed electronically at this/these address(es): *http://www.acquisition.gov/far/* or *http://farsite.hill.af.mil/vffara.htm*. Please note these addresses are subject to change.

If the Federal Acquisition Regulation (FAR) is not available at the locations indicated above, use the Department of State Acquisition website at *http://www.statebuy.state.gov/* to access links to the FAR. You may also use an internet “search engine” (for example, Google, Yahoo, Excite) to obtain the latest location of the most current FAR.

The following Federal Acquisition Regulation clause(s) is/are incorporated by reference (48 CFR CH. 1):

| CLAUSE | TITLE AND DATE |
|---|---|
| 52.202-1 | DEFINITIONS (NOV 2013) |
| 52.204-9 | PERSONAL IDENTITY VERIFICATION OF CONTRACTOR PERSONNEL (JAN 2011) |
| 52.204-10 | REPORTING EXECUTIVE COMPENSATION AND FIRST-TIER SUBCONTRACT AWARDS (OCT 2015) |
| 52.204-12 | DATA UNIVERSAL NUMBERING SYSTEM NUMBER MAINTENANCE (DEC 2012) |
| 52.204-13 | SYSTEM FOR AWARD MANAGEMENT MAINTENANCE (JULY 2013) |
| 52.204-19 | INCORPORATION BY REFERENCE OF REPRESENTATIONS AND CERTIFICATIONS (DEC 2014) |

| | |
|---|---|
| 52.209-6 | PROTECTING THE GOVERNMENT'S INTEREST WHEN SUBCONTRACTING WITH CONTRACTORS DEBARRED, SUSPENDED OR PROPOSED FOR DEBARMENT (OCT 2015) |
| 52.209-9 | UPDATES OF INFORMATION REGARDING RESPONSIBILITY MATTERS (JULY 2013) |
| 52.213-4 | TERMS AND CONDITIONS –SIMPLIFIED ACQUISITIONS (OTHER THAN COMMERCIAL ITEMS) (FEB 2016) |
| 52.216-7 | ALLOWABLE COST AND PAYMENT (JUN 2013) |
| 52.222-1 | NOTICE TO THE GOVERNMENT OF LABOR DISPUTES (FEB 1997) |
| 52.222-19 | CHILD LABOR – COOPERATION WITH AUTHORITIES AND REMEDIES (FEB 2016) |
| 52.222-50 | COMBATING TRAFFICKING IN PERSONS (FEB 2009) |
| 52.223-18 | ENCOURAGING CONTRACTOR POLICIES TO BAN TEXT MESSAGING WHILE DRIVING (AUG 2011) |
| 52.225-13 | RESTRICTIONS ON CERTAIN FOREIGN PURCHASES (JUNE 2008) |
| 52.225-14 | INCONSISTENCY BETWEEN ENGLISH VERSION AND TRANSLATION OF CONTRACT (FEB 2000) |
| 52.225-19 | CONTRACTOR PERSONNEL IN A DESIGNATED OPERATIONAL AREA OR SUPPORTING A DIPLOMATIC MISSION OUTSIDE THE UNITED STATES (MAR 2008) |
| 52.228-4 | WORKERS' COMPENSATION AND WAR-HAZARD INSURANCE OVERSEAS (APR 1984) |
| 52.228-5 | INSURANCE - WORK ON A GOVERNMENT INSTALLATION (JAN 1997) |
| 52.228-11 | PLEDGES OF ASSETS (JAN 2012) |
| 52.228-13 | ALTERNATIVE PAYMENT PROTECTION (JULY 2000) |
| 52.228-14 | IRREVOCABLE LETTER OF CREDIT (NOV 2014) |
| 52.229-6 | TAXES - FOREIGN FIXED-PRICE CONTRACTS (FEB 2013) |
| 52.229-7 | TAXES- FIXED PRICE CONTRACTS WITH FOREIGN GOVERNMENTS (FEB 2013) |
| 52.232-5 | PAYMENTS UNDER FIXED-PRICE CONSTRUCTION CONTRACTS (MAY 2014) |
| 52.232-8 | DISCOUNTS FOR PROMPT PAYMENT (FEB 2002) |
| 52.232-11 | EXTRAS (APR 1984) |
| 52.232-18 | AVAILABILITY OF FUNDS (APR 1984) |
| 52.232-22 | LIMITATION OF FUNDS (APR 1984) |
| 52.232-25 | PROMPT PAYMENT (JULY 2013) |
| 52.232-27 | PROMPT PAYMENT FOR CONSTRUCTION CONTRACTS (MAY 2014) |
| 52.232-33 | PAYMENT BY ELECTRONIC FUNDS TRANSFER - SYSTEM FOR AWARD MANAGEMENT (JULY 2013) |
| 52.232-34 | PAYMENT BY ELECTRONIC FUNDS TRANSFER – OTHER THAN SYSTEM FOR AWARD MANAGEMENT (JULY 2013) |
| 52.233-1 | DISPUTES (MAY 2014) *Alternate I (DEC 1991)* |
| 52.233-3 | PROTEST AFTER AWARD (AUG 1996) |
| 52.236-2 | DIFFERING SITE CONDITIONS (APR 1984) |
| 52.236-3 | SITE INVESTIGATION AND CONDITIONS AFFECTING THE WORK (APR 1984) |
| 52.236-5 | MATERIAL AND WORKMANSHIP (APR 1984) |
| 52.236-6 | SUPERINTENDENCE BY THE CONTRACTOR (APR 1984) |
| 52.236-7 | PERMITS AND RESPONSIBILITIES (NOV 1991) |
| 52.236-8 | OTHER CONTRACTS (APR 1984) |
| 52.236-9 | PROTECTION OF EXISTING VEGETATION, STRUCTURES, EQUIPMENT, UTILITIES, AND IMPROVEMENTS (APR 1984) |
| 52.236-10 | OPERATIONS AND STORAGE AREAS (APR 1984) |
| 52.236-11 | USE AND POSSESSION PRIOR TO COMPLETION (APR 1984) |

52.236-12 CLEANING UP (APR 1984)
52.236-14 AVAILABILITY AND USE OF UTILITY SERVICES (APR 1984)
52.236-15 SCHEDULES FOR CONSTRUCTION CONTRACTS (APR 1984)
52.236-21 SPECIFICATIONS AND DRAWINGS FOR CONSTRUCTION (FEB 1997)
52.236-26 PRECONSTRUCTION CONFERENCE (FEB 1995)
52.242-14 SUSPENSION OF WORK (APR 1984)
52.243-4 CHANGES (JUN 2007)
52.243-5 CHANGES AND CHANGED CONDITIONS (APR 1984)
52.244-6 SUBCONTRACTS FOR COMMERCIAL ITEMS (FEB 2016)
52.245-2 GOVERNMENT PROPERTY INSTALLATION OPERATION SERVICES (APR 2012)
52.245-9 USE AND CHARGES (APR 2012)
52.246-12 INSPECTION OF CONSTRUCTION (AUG 1996)
52.246-17 WARRANTY OF SUPPLIES OF A NONCOMPLEX NATURE (JUN 2003)
52.246-21 WARRANTY OF CONSTRUCTION (MAR 1994)
52.249-2 TERMINATION FOR CONVENIENCE OF THE GOVERNMENT (FIXED-PRICE) (APR 2012) *Alternate I (SEPT 1996)*
52.249-10 DEFAULT (FIXED-PRICE CONSTRUCTION) (APR 1984)
52.249-14 EXCUSABLE DELAYS (APR 1984)

The following Department of State Acquisition Regulation (DOSAR) clause(s) is/are set forth in full text:

652.204-70 DEPARTMENT OF STATE PERSONAL IDENTIFICATION CARD ISSUANCE PROCEDURES (MAY 2011)

(a) The Contractor shall comply with the Department of State (DOS) Personal Identification Card Issuance Procedures for all employees performing under this contract who require frequent and continuing access to DOS facilities, or information systems. The Contractor shall insert this clause in all subcontracts when the subcontractor's employees will require frequent and continuing access to DOS facilities, or information systems.

(b) The DOS Personal Identification Card Issuance Procedures may be accessed at *http://www.state.gov/m/ds/rls/rpt/c21664.htm* .

(End of clause)

652.229-71 PERSONAL PROPERTY DISPOSITION AT POSTS ABROAD (AUG 1999)

Regulations at 22 CFR Part 136 require that U.S. Government employees and their families do not profit personally from sales or other transactions with persons who are not themselves entitled to exemption from import restrictions, duties, or taxes. Should the Contractor experience importation or tax privileges in a foreign country because of its contractual relationship to the United States Government, the Contractor shall observe the requirements of 22 CFR Part 136 and all policies, rules, and procedures issued by the chief of mission in that foreign country.

(End of clause)

CONTRACTOR IDENTIFICATION (JULY 2008)

Contract performance may require contractor personnel to attend meetings with government personnel and the public, work within government offices, and/or utilize government email.

Contractor personnel must take the following actions to identify themselves as non-federal employees:

1) Use an e-mail signature block that shows name, the office being supported and company affiliation (e.g. "John Smith, Office of Human Resources, ACME Corporation Support Contractor");
2) Clearly identify themselves and their contractor affiliation in meetings;

3) Identify their contractor affiliation in Departmental e-mail and phone listings whenever contractor personnel are included in those listings; and
4) Contractor personnel may not utilize Department of State logos or indicia on business cards.

(End of clause)

652.236-70 ACCIDENT PREVENTION (APR 2004)

(a) *General*. The Contractor shall provide and maintain work environments and procedures which will safeguard the public and Government personnel, property, materials, supplies, and equipment exposed to contractor operations and activities; avoid interruptions of Government operations and delays in project completion dates; and, control costs in the performance of this contract. For these purposes, the Contractor shall:

(1) Provide appropriate safety barricades, signs and signal lights;

(2) Comply with the standards issued by any local government authority having jurisdiction over occupational health and safety issues; and,

(3) Ensure that any additional measures the Contracting Officer determines to be reasonably necessary for this purpose are taken.

(4) For overseas construction projects, the Contracting Officer shall specify in writing additional requirements regarding safety if the work involves:

(i) Scaffolding;

(ii) Work at heights above two (2) meters;

(iii) Trenching or other excavation greater than one (1) meter in depth;

(iv) Earth moving equipment;

(v) Temporary wiring, use of portable electric tools, or other recognized electrical hazards. Temporary wiring and portable electric tools require the use of a ground fault circuit interrupter (GFCI) in the affected circuits; other electrical hazards may also require the use of a GFCI;

(vi) Work in confined spaces (limited exits, potential for oxygen less that 19.5 percent or combustible atmosphere, potential for solid or liquid engulfment, or other hazards considered to be immediately dangerous to life or health such as water tanks, transformer vaults, sewers, cisterns, etc.);

(vii) Hazardous materials – a material with a physical or health hazard including but not limited to, flammable, explosive, corrosive, toxic, reactive or unstable, or any operations which creates any kind of contamination inside an occupied building such as dust from demolition activities, paints, solvents, etc.; or

(viii) Hazardous noise levels.

(b) *Records*. The Contractor shall maintain an accurate record of exposure data on all accidents incident to work performed under this contract resulting in death, traumatic injury, occupational disease, or damage to or theft of property, materials, supplies, or equipment. The Contractor shall report this data in the manner prescribed by the Contracting Officer.

(c) *Subcontracts*. The Contractor shall be responsible for its subcontractors' compliance with this clause.

(d) *Written program.* Before commencing work, the Contractor shall:

(1) Submit a written plan to the Contracting Officer for implementing this clause. The plan shall include specific management or technical procedures for effectively controlling hazards associated with the project; and,

(2) Meet with the Contracting Officer to discuss and develop a mutual understanding relative to administration of the overall safety program.

(e) *Notification*. The Contracting Officer shall notify the Contractor of any non-compliance with these requirements and the corrective actions required. This notice, when delivered to the Contractor or the Contractor's representative on site, shall be deemed sufficient notice of the non-compliance and corrective action required. After receiving the notice, the Contractor shall immediately take corrective action. If the Contractor fails or refuses to promptly take corrective action, the Contracting Officer may issue an order suspending all or part of the work until satisfactory corrective action has been taken. The Contractor shall not be entitled to any equitable adjustment of the contract price or extension of the performance schedule on any suspension of work order issued under this clause.

(End of clause)

652.242-73 AUTHORIZATION AND PERFORMANCE (AUG 1999)

(a) The Contractor warrants the following:

(1) That is has obtained authorization to operate and do business in the country or countries in which this contract will be performed;

(2) That is has obtained all necessary licenses and permits required to perform this contract; and,

(3) That it shall comply fully with all laws, decrees, labor standards, and regulations of said country or countries during the performance of this contract.

(b) If the party actually performing the work will be a subcontractor or joint venture partner, then such subcontractor or joint venture partner agrees to the requirements of paragraph (a) of this clause.

(End of clause)

652.243-70 NOTICES (AUG 1999)

Any notice or request relating to this contract given by either party to the other shall be in writing. Said notice or request shall be mailed or delivered by hand to the other party at the address provided in the schedule of the contract. All modifications to the contract must be made in writing by the Contracting Officer.

(End of clause)

I. LIST OF ATTACHMENTS

| ATTACHMENT NUMBER | DESCRIPTION OF ATTACHMENT | NUMBER OF PAGES |
|---|---|---|
| Attachment 1 | Performance and Guaranty Bond | 1 |
| Attachment 2 | Payment Bond | 1 |
| Attachment 3 | Breakdown of Price by Divisions of Specifications | 1 |
| Attachment 4 | Statement of Work | 11 |

**ATTACHMENT 1**

**PERFORMANCE AND GUARANTY BOND**

(To be attached upon award)

**ATTACHMENT 2**

**PAYMENT BOND**

(To be attached upon award)

**ATTACHMENT 3**

**UNITED STATES DEPARTMENT OF STATE**
**BREAKDOWN OF PRICE BY DIVISIONS OF SPECIFICATIONS**

RROJECT: REPLACEMENT OF ROOF AT A US GOVERNMENT-OWNED RESIDENCE

| (1)DIVISION/DESCRIPTION | (2)LABOR | (3)MATERIALS | (4)OVERHEAD | (5)PROFIT | (6)TOTAL |
|---|---|---|---|---|---|
| 1 General Requirements<br>2. Site Work | | | | | |
| 3. Concrete<br>4. Masonry | | | | | |
| 5. Metals<br>6. Wood and Plastic | | | | | |
| 7. Thermal and Moisture<br>8. Doors and Windows | | | | | |
| 9. Finishes<br>10. Specialties | | | | | |
| 11. Equipment<br>12 Furnishings | | | | | |
| 13. Special Construction<br>14. Conveying Systems | | | | | |
| 15. Mechanical<br>16. Electrical | | | | | |
| | | | TOTAL: | EURO | |

Allowance Items:

PROPOSAL PRICE TOTAL:

Alternates (list separately do not total)

***Offeror:***
***Date***

# ATTACHMENT 4

# STATEMENT OF WORK

## 1.0 BACKGROUND AND PURPOSE

1.1 The U.S. Embassy in Athens, Greece and Overseas Buildings Operations [OBO] has a requirement to replace the residence roof at Knox Residence. This roof project requires a qualified Roof Contractor to perform repairs and replacement according to US standard roof industry practices.

1.2 The Knox Residence roof is approximately 220 square meters [2370 square feet] in area and consists of clay tile roofing on a wood deck supported on wood trusses and rafters. The wood deck is supported by concrete framing, masonry bearing walls and a concrete ceiling deck. The exterior walls have a painted stucco finish.

1.3 The Knox Residence was constructed in 1948 and purchased by the US government the same year. It is a split-level residence, with one level 1 m below ground surface and two floors above, and is situated on a 0.43 acre lot.

## 2.0 GENERAL REQUIREMENTS

2.1 The Contractor shall provide personnel, material, equipment, and supervision to complete the technical requirements in this Statement of Work. The Contractor shall be responsible for hiring labor, equipment vendors and shall follow security and safety directives as explained by the Embassy. Total Period of Performance to Completion is 28 days on-site construction.

2.2 The Contractor shall be responsible to issue a small scale permit from the planning offices in order to perform this work and a permit to install scaffolding around the roof.

2.3 The Contractor shall not be admitted to areas of the property outside the areas designated for the project except with permission by the Embassy. The Contractor shall address the impact of the consequent disruption caused by the proposed work.

## 3.0 SCOPE OF WORK

3.1 The Contractor shall be required to prepare reports, bill of materials, quality control schedules, material product data, shop drawings, and construction costs. These documents shall provide the necessary interfaces, coordination, and communication among the Embassy, OBO, and Contractor for the delivery of a complete roof project.

3.2 Logistics:

1. All materials shall be delivered, and stored under cover of weather
2. Debris removal shall be daily
3. Electrical source available
4. Water source available
5. Provide temporary overhead protection at building entrances
6. Labor background checks require a minimum of 21 days for clearance by the Embassy

3.3 Design Base Roof System:

1. Terracotta Clay Tile Mechanically Fastened to Wood Battens.
2. Ridge & Hip Tile set in Mortar.
3. Two Way Wood Batten system.
4. Copper Crickets and Water Diverters around Rooftop Abutments.
5. Copper Plumbing Stack Flashing, Chimney Flashing, Rise Wall Flashing.
6. Bituminous Underlayment.
7. Wood Deck Replacement.

8. Rafters replacement.
9. Corbels installation.
10. Copper Fascia (roof edge) installation.
11. Rooftop Repairs to Stone or Stucco Chimneys, Rise Walls and Painting.
12. Install attic insulation on concrete slab.
13. Reuse Gutters & Downspouts (if any).

3.4 Removals:

1. Temporarily remove existing solar panels.
2. Remove all existing clay tiles.
3. Remove existing roof system to expose the concrete frame.
4. Remove existing attic insulation.
5. Remove existing gutters & downspouts, salvage and store for reuse.
6. Prepare perimeter rise walls to receive new metal flashing.
7. Contractor shall remove debris daily.

3.5 Attic Insulation:

1. Fiberglass batts 225mm thick; loose laid on the ceiling deck.
2. Note: Do not use exposed extruded polystyrene insulation as it does not meet IBC Residential Fire Code requirements.

3.6 Rafters:

1. Treated wood shall be termite resistant; ELOT-EN 338 treated with wood preservatives ACC.
2. All fasteners shall be Stainless Steel Type 316.

3.7 Wood Deck & Trim:

1. Replace wood deck.
    a. Treated plywood 25mm shall be termite resistant; ELOT-EN 338 treated with wood preservatives ACC.
    b. All fasteners shall be Stainless Steel Type 316, except at copper flashings.

2. Copper for Fascia (roof edge): Architectural sheet copper, 0.55mm minimum thickness (16 ounce).
    a. Secure trim to ends or sides of purlins with copper fasteners, minimum 13mm (½ inch) from end of purlins.
    b. Perforate sheet along entire length between top of membrane and underside of horizontal batten, to allow water to drain. (Option: use copper insect screen instead of perforated sheet.)

3.8 Bituminous Underlayment:

1. ESHAROOF REFLECT or approved equal, 1.8 Kg/m2, heavy-weight, foil-faced, mechanically fastened bituminous underlayment with non-woven polyester reinforcement; roll size: 1m x 20m.
    a. Consistent with good roofing practice, install the membrane such that all laps shed water. Always work from the low point to the high point of the roof.
    b. Apply the membrane in valleys before the membrane is applied to the eaves. Following placement along the eaves, continue application of the membrane up the roof. The entire roof deck is to receive underlayment.
    c. Overlap sides 75mm (3 inches) minimum and end laps 150mm (6 inches) minimum.
    d. Turn up underlayment 75mm (3 inches) minimum at rooftop abutments, rise walls, and chimneys.

3.9 Two Way Wood Batten System (Refer to attached Drawing Detail):

1. Lumber Sizes:
    a. Vertical Battens: 25mm (1 inch) by 50mm (2 inches).
    b. Horizontal Battens: 50mm (2 inch) by 50mm (2 inches).

c. Wood Treatment: treated against water borne elements and insects resistant; ELOT-EN 338 treated with wood preservatives ACC.

2. Battens shall be cut to size. Ends of adjoining battens shall be beveled cut to fit.
3. Secure battens to wood deck using appropriate fastener.
    a. Nail: Stainless steel ring shank nails, 11 gauge diameter of sufficient length to penetrate 19mm (3/4 inch) into or through the thickness of the deck or batten.
    b. Screw: #8 diameter stainless steel wood screw.

4. Vertical Battens:
    a. Pre-drill fastener holes 300mm on-center in vertical battens; apply mastic compatible with the underlayment to the holes prior to fastening.
    b. Secure vertical battens to substrate using appropriate fasteners spaced 300mm (12-inches) on-center.
    c. Install vertical battens positioned over rafter or structural support and at 600mm (24-inches) on-center (maximum).
5. Horizontal Battens: Position perpendicular to the roof slope at spacing equal to the tile exposure, approximately 300mm (12 inches) on-center. Field verify exposure. Fasten horizontal battens to each vertical batten.

3.10 Tongue And Groove Planking:

1. Treated wood 20mm shall be termite resistant; ELOT-EN 338 treated with wood preservatives ACC.
2. Nail: Stainless steel ring shank nails, 11 gauge diameter of sufficient length.
3. All exposed surfaces shall be stained with Matte 100% Acrylic Latex Solid Waterborne Stain; Iroco color.

3.11 Corbels:

1. Treated wood 50mm x 70mm shall be termite resistant; ELOT-EN 338 treated with wood preservatives ACC.
2. All exposed surfaces shall be stained with Matte 100% Acrylic Latex Solid Waterborne Stain; Iroco color.

3.12 Sheet Metal Flashing:

1. Material: Architectural sheet copper, 0.55mm minimum thickness (16 ounce).
2. Use only copper fasteners at sheet metal flashing.
3. Water Diverters (Channel Flashing) at Rooftop Abutments, Rise Walls, & Chimneys:
    a. Saw cut a new horizontal reglet joint into the masonry 200mm (minimum) above finished tile level. This shall take place <u>prior to underlayment installation</u> to avoid dirt and debris damaging the underlayment.
    b. Reglet can be cut parallel to slope or be stepped down; if stepped, each section shall extend horizontally for 200mm (minimum).
    c. Install copper channel flashing parallel to slope <u>after underlayment is completed</u>. Side of channel shall extend 150mm (minimum) up face of wall.
    d. Where channel flashing must be fabricated in two or more lengths, start at the lowest portion and install subsequent lengths to overlap lower portions by 75mm (minimum) such that all laps shed water.
    e. Low end of channel flashing shall extend to eave or overlap apron flashing at chimneys.
    f. Install copper counterflashing. Secure flashing in the cut reglet with lead wedges. Counterflashings shall overlap base flashings for 50mm (minimum) vertically.
4. Plumbing Stack
    a. Three-piece copper flashing, fabricated for actual pipe size, with base flanges 300mm x 300mm, height to be 200mm (minimum) above top of tiles; all seams soldered.
        i. Primary copper flashing boot installed <u>prior to underlayment installation</u>.
        ii. Secondary copper flashing boot installed during tile installation; lower side of flange installed over top of tiles; higher side of flange underneath tiles.

iii. Umbrella (bonnet) flashing to cover top of boots, secured at top with adjustable draw band; top of umbrella set in sealant.

b. Sealant: Polyurethane or acrylic urethane sealant designed for use with Copper. Type II, Grade NS.

5. Edge Flashing:
   a. Install copper edge flashing at rake edges and eaves prior to the underlayment installation.
   b. Horizontal face of edge flashing shall extend over the roof deck for 100mm (minimum); vertical face of edge flashing shall turn down 25mm (minimum) to cover edge of deck boards, and shall terminate in angled drip edge.
   c. Underlayment shall completely cover horizontal face of edge flashing.
6. Chimneys (2):
   a. Remove existing flashing and counterflashing. Patch and seal existing mortar joints.
   b. Saw cut a new horizontal reglet joint into the masonry 200mm (minimum) above finished tile level at all sides of chimneys. This shall take place prior to underlayment installation to avoid dirt and debris damaging the underlayment.
   c. Install water diverter (channel flashing) at sides of chimneys parallel to slope (after underlayment is completed), per description above.
   d. Install apron flashing at high side of chimney, per attached detail. Vertical face shall extend 150mm high, and wrap around sides of chimney. Horizontal face shall extend 450mm upslope, and 100mm outward from chimney edges.
   e. After tile installation, install apron flashing at low face of chimneys, extending down-slope on top of tiles for 100mm (minimum); sides of apron flashing shall underlap low end of channel flashing. Apron flashing shall extend up chimney face for 150mm (minimum) to form base flashing, and wrap 50mm around chimney corners. Fill voids below apron flashing solid with mortar.
   f. Install counterflashings in cut reglets at all sides of chimneys. Secure flashing in the cut reglet with lead wedges. Counterflashings shall overlap base flashings for 50mm (minimum) vertically.

3.13 Terra Cotta Clay Tile:

1. New replacement tiles shall be molded clay roofing tile units of shape and configuration such as “Portuguese” (Roman) by KEBE SA or approved equal, with accessories, kiln-fired to vitrification, and free from surface imperfections.Include specially shaped, color-matched units as indicated or required for eaves, rakes, ridges, hips, and other conditions.Provide with fastening holes pre-punched at factory before firing.Provide minimum 3-inch (75-mm) lap between succeeding courses of tile. Drive screws or nails to clear the tile so that the tile hangs from the screw or nail. Secure **every** tile with a stainless steel (Type 316) screw or nail.
5. Set rake, ridge and hip tiles in a full bed of mortar and strike mortar flush with face of cover tile.
   a. Mortar: Comply with ASTM C 270, proportion specification for Type N mortar mix.
   b. Provide colored pigment to produce mortar, which matches color of tile.
6. Rake edge tiles: Use “monk” tiles, and run parallel to slope. (Do not match existing change in direction at rake edge tiles.)
7. Eave Closures and Tile Vents: copper screen eave closures and tile vents as required for application. Also see paragraph 3.Cut and fit tile at roof vents after tiles are laid, fill any voids with mortar.

**4.0 CONTRACT ADMINISTRATION**

4.1 OBO does not make representations or warranties of whatsoever kind or nature, either expressed or implied, as to the quality, level of completion, accuracy, extent of compliance with the standards, codes and requirements described or referred to in this SOW, or the extent of coordination between or among the documents provided to the Contractor.

4.2 Neither the Embassy's nor OBO's review, approval, or acceptance of, nor payment for the services required under this contract shall be construed to operate as a waiver of any rights under this contract or any cause of action against the Contractor arising out of the performance of this contract.

4.3 OBO has the right to inspect and test all services called for by the contract, to the extent practicable at all times and places during the term of the contract. OBO may perform quality assurance inspections (QAI) and to confirm the work is being performed according to the Statement of Work.

## 5.0 RESPONSIBILITY OF THE CONTRACTOR

5.1 The Contractor shall be responsible for the professional quality, technical accuracy, and the coordination of all construction and other services furnished under this contract. The Contractor shall, without additional compensation, correct or revise any errors or deficiencies in its construction and other services.

5.2 The Contractor shall identify a Project Manager who shall be responsible for the overall management of this Contract. The Project Manager will be approved by the Embassy.

5.3 The Contractor is responsible for safety and shall comply with all local labor laws, regulations, customs and practices pertaining to labor, safety and similar matters. The Contractor shall promptly report all accidents resulting in lost time, disabling, or fatal injuries to the COR.

5.4 Contractor's Five Year Workmanship Warranty: Furnish a written warranty agreeing to repair/replace defective installation and workmanship labor causing leakage of water, deterioration of materials, and other failures of the installed system, sealants, painting, coatings, and related work on this project, to perform as required within the warranty period.

## 6.0 CONSTRUCTION REQUIREMENTS

6.1 The Contractor shall be responsible for all required materials, equipment and personnel to manage, administer, and supervise the roof project. All workmanship shall be of good quality and performed in a skillful manner as determined of OBO.

6.2 The Contractor will be permitted to use the area within the compound for operation of his construction equipment and temporary facilities. The Contractor is responsible for obtaining any additional off compound storage areas required.

6.3 The Contractor shall be responsible for connection of temporary utilities to existing utilities including water and power. All temporary connections to local water and power shall be coordinated with the Embassy. Cost of utilities will be paid by the Embassy.

## 7.0 CRITERIA

7.1 The Contractor shall construct the roof deck replacement project in accordance with U.S. codes and standards. OBO will review and comment on the Contractor's submissions using the following codes and standards:

1. Underwriters Laboratory Requirements for a Class B fire-rated roof assembly
2. Factory Mutual wind uplift requirements
3. National Roofing and Contractors Association, Roofing and Waterproofing Manual

4. Sheet Metal and Air Conditioning Contractors National Association for roof system details
5. American Society for Testing & Materials, roofing, waterproofing & bituminous materials
6. International Building Code, to include structural load and roof drainage requirements

## 8.0 DELIVERABLE SCHEDULE

8.1 The Contractor shall commence work under this contract promptly, execute the work diligently, and achieve final completion and acceptance of the roof project including final cleanup of the premises within the contract period specified.

8.2 Milestones:

| | |
|---|---|
| Award of Contract | |
| Pre-construction Submittals | |
| (product data and shop drawings) | Within 7 days after award |
| OBO Review of Submittals | 7 days |
| Material Procurement | 15 days |
| Roof Construction Period of Performance | 28 days |
| Final Cleanup Begins | 10 days prior to Completion |
| **Total Period of Performance to Completion** | **57 days** |
| Rainy Season | October - April |

8.3 Project Completion: Furnish surplus roof materials, one copy of maintenance and operating information, and catalog cuts of all items installed.

8.4 Proposal Format Line Items:

| | |
|---|---|
| Mobilization | _____ |
| Removals & Salvage | _____ |
| Wood Deck & Trim Repair | _____ |
| | |
| Sheetmetal Flashing | _____ |
| Gutters & Downspout Reinstall | _____ |
| Underlayment | _____ |
| Two Way Wood Batten Systems | _____ |
| Tile Installation | _____ |
| Stucco & Painting | _____ |
| De-Mobilization | _____ |
| VAT | _____ |
| | |
| **TOTAL** | _____ |

**Unit Price No.1**:
Deck/Trim repair above the 20% included in the base contract sum _____/SM____

## 9.0 SECURITY

9.1 This is a non-classified project. The work to be performed under this contract requires that the Contractor submit corporate, financial and personnel information for review by the Embassy. Information submitted by the Contractor will not be disclosed beyond the Embassy.

END OF STATEMENT OF WORK

**ATTACHMENT: BATTEN AND FLASHING DETAILS**

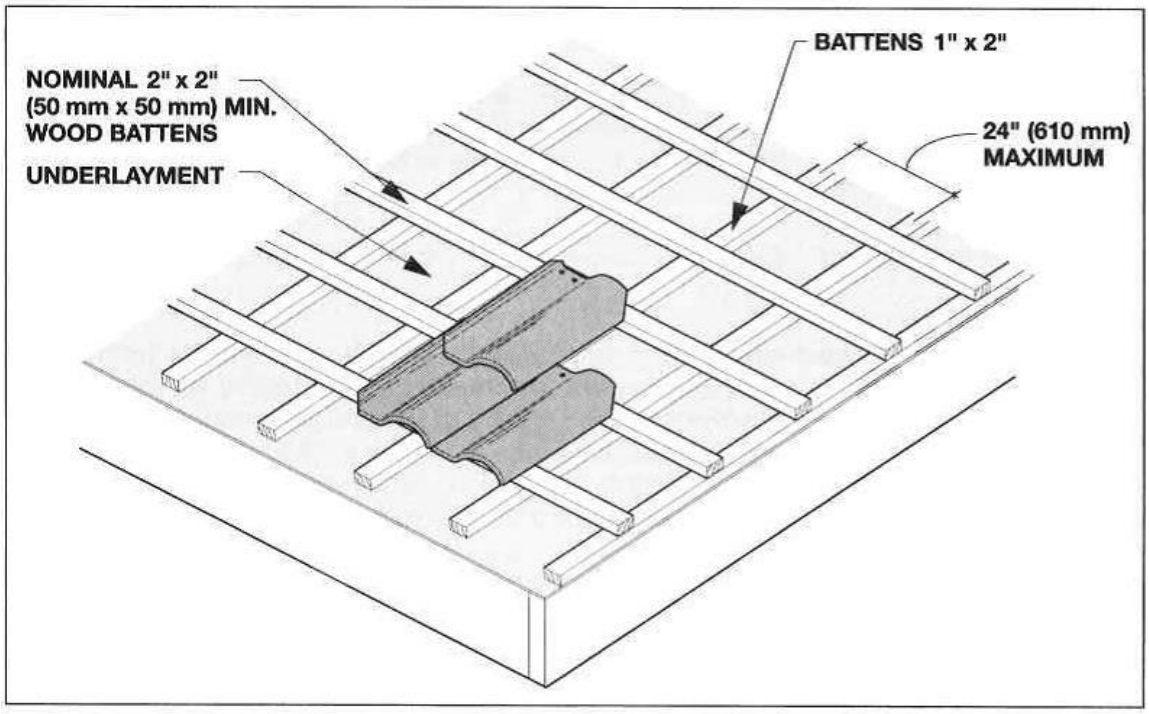


*Figure 5: Two way wood batten system.*

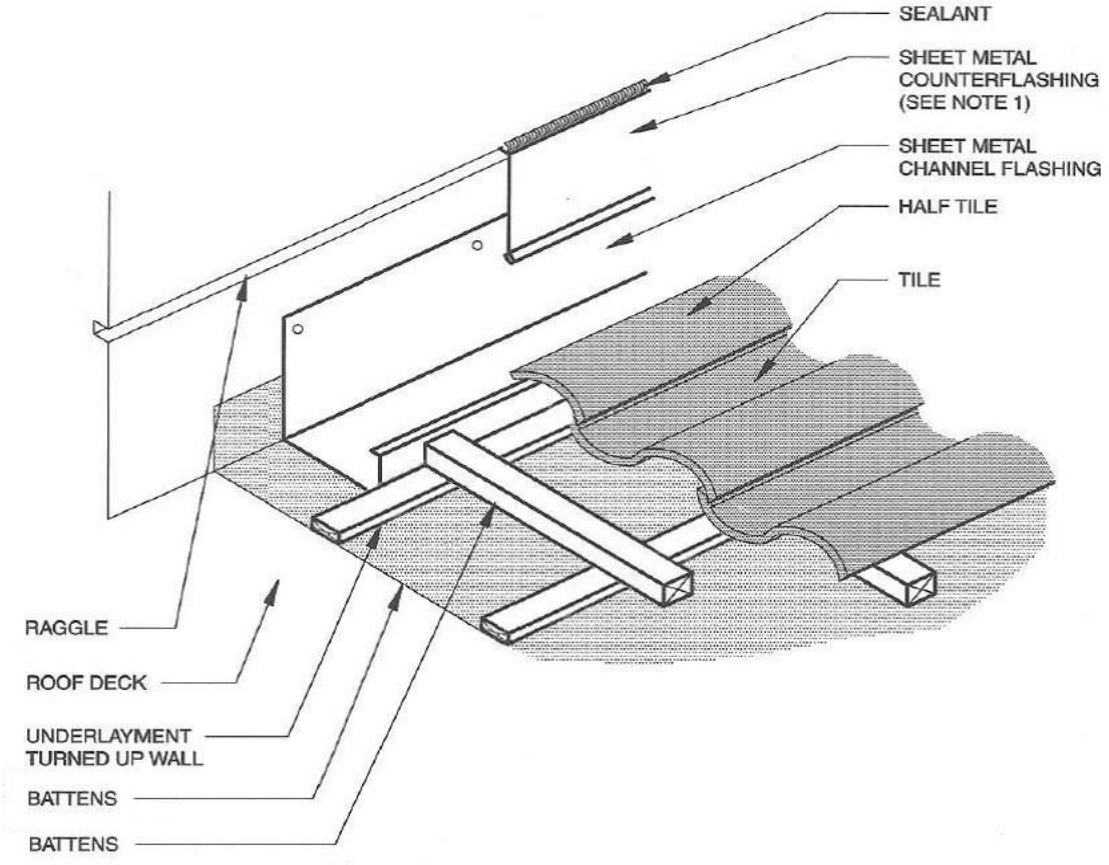

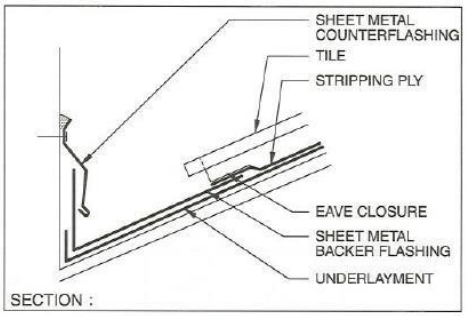
SHEET METAL COUNTERFLASHING
TILE
STRIPPING PLY
EAVE CLOSURE
SHEET METAL BACKER FLASHING
UNDERLAYMENT
SECTION :

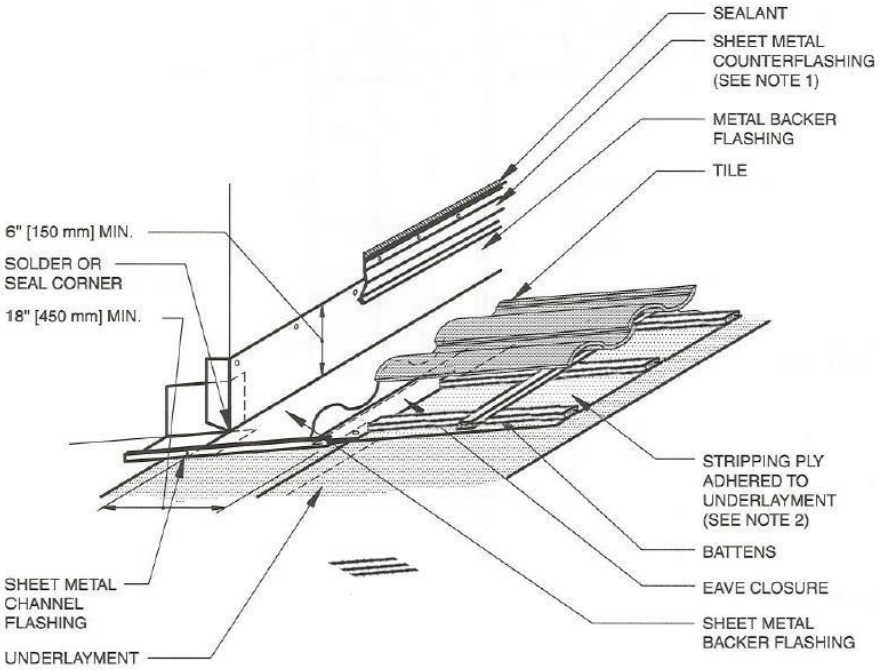
SEALANT
SHEET METAL COUNTERFLASHING (SEE NOTE 1)
METAL BACKER FLASHING
TILE
6" [150 mm] MIN.
SOLDER OR SEAL CORNER
18" [450 mm] MIN.
STRIPPING PLY ADHERED TO UNDERLAYMENT (SEE NOTE 2)
BATTENS
EAVE CLOSURE
SHEET METAL BACKER FLASHING
SHEET METAL CHANNEL FLASHING
UNDERLAYMENT

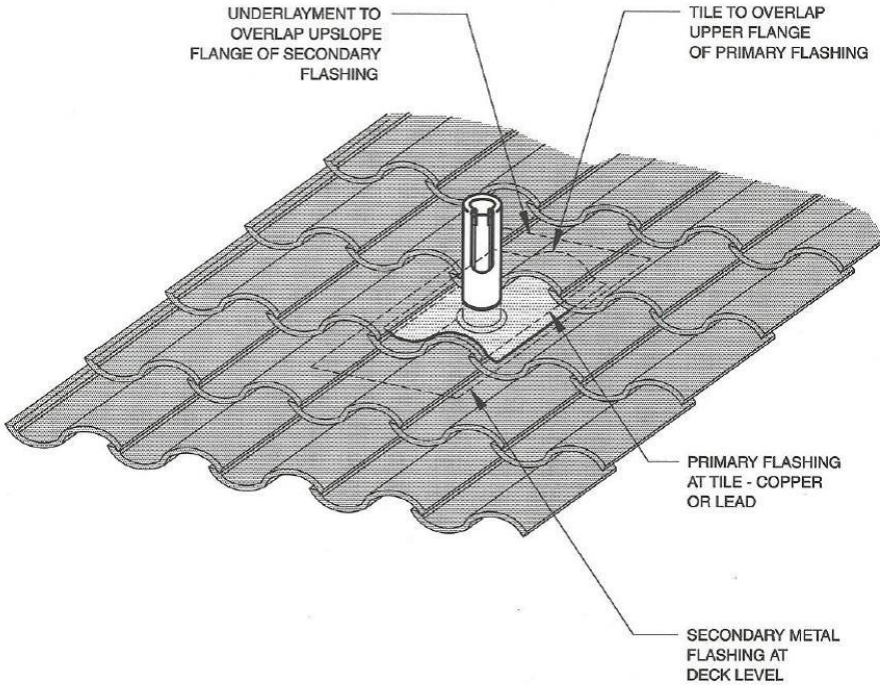
UNDERLAYMENT TO OVERLAP UPSLOPE FLANGE OF SECONDARY FLASHING
TILE TO OVERLAP UPPER FLANGE OF PRIMARY FLASHING
PRIMARY FLASHING AT TILE - COPPER OR LEAD
SECONDARY METAL FLASHING AT DECK LEVEL

**ATTACHMENT: PHOTOGRAPHS OF EXISTING ATTIC**

**ATTACHMENT: PHOTOGRAPHS OF EXISTING ROOF**

**ATTACHMENT: PHOTOGRAPH OF SOLAR WATER HEATERS**

J. QUOTATION INFORMATION

A. QUALIFICATIONS OF OFFERORS

Offerors/quoters must be technically qualified and financially responsible to perform the work described in this solicitation. At a minimum, each Offeror/Quoter must meet the following requirements:

(1) Be able to understand written and spoken English;
(2) Have an established business with a permanent address and telephone listing;
(3) Be able to demonstrate prior construction experience with suitable references;
(4) Have the necessary personnel, equipment and financial resources available to perform the work;
(5) Have all licenses and permits required by local law;
(6) Meet all local insurance requirements;
(7) Have the ability to obtain or to post adequate performance security, such as bonds, irrevocable letters of credit or guarantees issued by a reputable financial institution;
(8) Have no adverse criminal record; and
(9) Have no political or business affiliation which could be considered contrary to the interests of the United States.

B. SUBMISSION OF QUOTATIONS

This solicitation is for the performance of the construction services described in SCOPE OF WORK, and the Attachments which are a part of this request for quotation.

| Each quotation must consist of the following: | | |
|---|---|---|
| VOLUME | TITLE | NUMBER OF COPIES |
| I | Standard Form 18 including a completed Attachment 3, "BREAKDOWN OF PROPOSAL PRICE BY DIVISIONS OF SPECIFICATIONS | 1 |
| II | Performance schedule in the form of a "bar chart" and Business Management/Technical Proposal | 1 |

The Offeror/Quoter shall identify and explain/justify any deviations, exceptions, or conditional assumptions taken with respect to any of the instructions or requirements of this request for quotation in the appropriate volume of the offer.

Volume II: Performance schedule and Business Management/Technical Proposal.

(a) Present the performance schedule in the form of a "bar chart" indicating when the various portions of the work will be commenced and completed within the required schedule. This bar chart shall be in sufficient detail to clearly show each segregable portion of work and its planned commencement and completion date.

(b) The Business Management/Technical Proposal shall be in two parts, including the following information:

Proposed Work Information - Provide the following:

(1) A list of the names, addresses and telephone numbers of the owners, partners, and principal officers of the Offeror;

(2) The name and address of the Offeror's field superintendent for this project;

(3) A list of the names, addresses, and telephone numbers of subcontractors and principal materials suppliers to be used on the project, indicating what portions of the work will be performed by them; and,

Experience and Past Performance - List all contracts and subcontracts your company has held over the past three years for the same or similar work. Provide the following information for each contract and subcontract:

(1) Customer's name, address, and telephone numbers of customer's lead contract and technical personnel;

(2) Contract number and type;

(3) Date of the contract award place(s) of performance, and completion dates; Contract dollar value;

(4) Brief description of the work, including responsibilities; and

(5) Any litigation currently in process or occurring within last 5 years.

C. 52.236-27 SITE VISIT (CONSTRUCTION) (FEB 1995)

(a) The clauses at 52.236-2, Differing Site Conditions, and 52.236-3, Site Investigations and Conditions Affecting the Work, will be included in any contract awarded as a result of this solicitation. Accordingly, offerors or quoters are urged and expected to inspect the site where the work will be performed.

(b) A site visit has been scheduled for **May 10, 2016 at 10:00 hours.**

(c) Participants will meet at the entrance of the residence.

(d) Offerors should contact the following individual to make appropriate arrangements no later than **12.00 hours on May 9, 2016**

| | |
|---|---|
| Mr. Apostolos Mouyios | mouyiostv@state.gov |
| NAME | E-Mail |

D. MAGNITUDE OF CONSTRUCTION PROJECT

It is anticipated that the range in price of this contract will be: **Between $25,000 and $100,000 (or equivalent in local currency)**

E. LATE QUOTATIONS. Late quotations shall be handled in accordance with FAR.

F. 52.252-1 SOLICITATION PROVISIONS INCORPORATED BY REFERENCE (FEB 1998)

This contract incorporates the following provisions by reference, with the same force and effect as if they were given in full text. Upon request, the Contracting Officer will make their full text available. The offeror is cautioned that the listed provisions may include blocks that must be completed by the offeror and submitted with its quotation or offer. In lieu of submitting the full text of those provisions, the offeror may identify the provision by paragraph identifier and provide the appropriate information with its quotation or offer.

Also, the full text of a solicitation provision may be accessed electronically at: *http://acquisition.gov/far/index.html/* or *http://farsite.hill.af.mil/vffara.htm*. Please note these addresses are subject to change.

If the Federal Acquisition Regulation (FAR) is not available at the locations indicated above, use the Department of State Acquisition website at *http://www.statebuy.state.gov* to access the link to the FAR, or use of an Internet "search engine" (for example, Google, Yahoo or Excite) is suggested to obtain the latest location of the most current FAR.

The following Federal Acquisition Regulation provisions are incorporated by reference (48 CFR CH. 1):

| PROVISION | TITLE AND DATE |
|---|---|
| 52.204-6 | DATA UNIVERSAL NUMBERING SYSTEM (DUNS) NUMBER (JULY 2013) |
| 52.204-7 | SYSTEM FOR AWARD MANAGEMENT (JULY 2013) |
| 52.204-16 | COMMERCIAL AND GOVERNMENT ENTITY CODE REPORTING (JUL 2015) |
| 52.214-34 | SUBMISSION OF OFFERS IN THE ENGLISH LANGUAGE (APR 1991) |
| 52.215-1 | INSTRUCTIONS TO OFFERORS--COMPETITIVE ACQUISITION (JAN 2004) |

K. EVALUATION CRITERIA

Award will be made to the lowest priced, acceptable, responsible quoter. The Government reserves the right to reject quotations that are unreasonably low or high in price.

The Government will determine acceptability by assessing the offeror's compliance with the terms of the RFQ. The Government will determine responsibility by analyzing whether the apparent successful quoter complies with the requirements of FAR 9.1, including:

- ability to comply with the required performance period, taking into consideration all existing commercial and governmental business commitments;
- satisfactory record of integrity and business ethics;
- necessary organization, experience, and skills or the ability to obtain them;
- necessary equipment and facilities or the ability to obtain them; and
- otherwise, qualified and eligible to receive an award under applicable laws and regulations.

The following DOSAR is provided in full text:

652.209-79 REPRESENTATION BY CORPORATION REGARDING AN UNPAID DELINQUENT TAX LIABILITY OR A FELONY CRIMINAL CONVICTION UNDER ANY FEDERAL LAW (SEPT 2014) (DEVIATION per PIB 2014-21)

(a) In accordance with section 7073 of Division K of the Consolidated Appropriations Act, 2014 (Public Law 113-76) none of the funds made available by that Act may be used to enter into a contract with any corporation that –

(1) Was convicted of a felony criminal violation under any Federal law within the preceding 24 months, where the awarding agency has direct knowledge of the conviction, unless the agency has considered, in accordance with its procedures, that this further action is not necessary to protect the interests of the Government; or

(2) Has any unpaid Federal tax liability that has been assessed for which all judicial and administrative remedies have been exhausted or have lapsed, and that is not being paid in a timely manner pursuant to an agreement with the authority responsible for collecting the tax liability, where the awarding agency has direct knowledge of the unpaid tax liability, unless the Federal agency has considered, in accordance with its procedures, that this further action is not necessary to protect the interests of the Government.

For the purposes of section 7073, it is the Department of State's policy that no award may be made to any corporation covered by (1) or (2) above, unless the Procurement Executive has made a written determination that suspension or debarment is not necessary to protect the interests of the Government.

(b) Offeror represents that—

(1) It is [ ] is not [ ] a corporation that was convicted of a felony criminal violation under a Federal law within the preceding 24 months.

(2) It is [ ] is not [ ] a corporation that has any unpaid Federal tax liability that has been assessed for which all judicial and administrative remedies have been exhausted or have lapsed, and that is not being paid in a timely manner pursuant to an agreement with the authority responsible for collecting the tax liability.

(End of provision)

SECTION L - REPRESENTATIONS, CERTIFICATIONS AND
OTHER STATEMENTS OF OFFERORS OR QUOTERS

L.1 52.204-3 TAXPAYER IDENTIFICATION (OCT 1998)

(a) Definitions.

"Common parent", as used in this provision, means that corporate entity that owns or controls an affiliated group of corporations that files its Federal income tax returns on a consolidated basis, and of which the offeror is a member.

"Taxpayer Identification Number (TIN)", as used in this provision, means the number required by the IRS to be used by the offeror in reporting income tax and other returns. The TIN may be either a Social Security Number or an Employer Identification Number.

(b) All offerors must submit the information required in paragraphs (d) through (f) of this provision in order to comply with debt collection requirements of 31 U.S.C. 7701(c) and 3325 (d), reporting requirements of 26 USC 6041, 6041A, and 6050M and implementing regulations issued by the Internal Revenue Service (IRS). If the resulting contract is subject to the reporting requirements described in FAR 4.904, the failure or refusal by the offeror to furnish the information may result in a 31 percent reduction of payments

(c) otherwise due under the contract.

(d) The TIN may be used by the Government to collect and report on any delinquent amounts arising out of the offeror's relationship with the Government (3l USC 7701( c)(3)). If the resulting contract is subject to the payment reporting requirements described in FAR 4.904, the TIN provided hereunder may be matched with IRS records to verify the accuracy of the offeror's TIN.

(e) Taxpayer Identification Number (TIN).

TIN: _____

☐ TIN has been applied for.

☐ TIN is not required because:

☐ Offeror is a nonresident alien, foreign corporation, or foreign partnership that does not have income effectively connected with the conduct of a trade or business in the U.S. and does not have an office or place of business or a fiscal paying agent in the U.S.;

☐ Offeror is an agency or instrumentality of a foreign government;

☐ Offeror is an agency or instrumentality of the Federal Government.

(e) Type of Organization.

☐ Sole Proprietorship;

☐ Partnership;

☐ Corporate Entity (not tax exempt);

☐ Corporate Entity (tax exempt);

☐ Government Entity (Federal, State or local);

☐ Foreign Government;

☐ International organization per 26 CFR 1.6049-4;

☐ Other _____.

(f) Common Parent.

☐ Offeror is not owned or controlled by a common parent as defined in paragraph (a) of this clause.

☐ Name and TIN of common parent:

Name _____
TIN_____

(End of provision)

L.2 52.204-8 - Annual Representations and Certifications (Feb 2016)

(a)(1) The North American Industry Classification System (NAICS) code(s) for this acquisition is/are:

**236118 - Construction Management, residential remodeling**

**236220 - Construction Management, commercial and institutional building or Warehouse construction**

**237110 - Construction Management, water and sewage line and related structures**

**237310 - Construction Management, highway road, street or bridge**

**237990 - Construction Management, outdoor recreation facility**

(2) The small business size standard is **$36.5 Million USD**.

(3) The small business size standard for a concern which submits an offer in its own name, other than on a construction or service contract, but which proposes to furnish a product which it did not itself manufacture, is 500 employees.

(b) (1) If the provision at 52.204-7, System for Award Management, is included in this solicitation, paragraph (d) of this provision applies.

(2) If the provision at 52.204-7 is not included in this solicitation, and the offeror is currently registered in the System for Award Management (SAM), and has completed the Representations and Certifications section of SAM electronically, the offeror may choose to use paragraph (d) of this provision instead of completing the corresponding individual representations and certifications in the solicitation. The offeror shall indicate which option applies by checking one of the following boxes:

[ ] (i) Paragraph (d) applies.

[ ] (ii) Paragraph (d) does not apply and the offeror has completed the individual representations and certifications in the solicitation.

(c)(1) The following representations or certifications in SAM are applicable to this solicitation as indicated:

(i) 52.203-2, Certificate of Independent Price Determination. This provision applies to solicitations when a firm-fixed-price contract or fixed-price contract with economic price adjustment is contemplated, unless—

(A) The acquisition is to be made under the simplified acquisition procedures in Part 13;

(B) The solicitation is a request for technical proposals under two-step sealed bidding procedures; or

(C) The solicitation is for utility services for which rates are set by law or regulation.

(ii) 52.203-11, Certification and Disclosure Regarding Payments to Influence Certain Federal Transactions. This provision applies to solicitations expected to exceed $150,000.

(iii) 52.204-3, Taxpayer Identification. This provision applies to solicitations that do not include the provision at 52.204-7, System for Award Management.

(iv) 52.204-5, Women-Owned Business (Other Than Small Business). This provision applies to solicitations that—

(A) Are not set aside for small business concerns;

(B) Exceed the simplified acquisition threshold; and

(C) Are for contracts that will be performed in the United States or its outlying areas.

(v) 52.209-2, Prohibition on Contracting with Inverted Domestic Corporations—Representation.

(vi) 52.209-5, Certification Regarding Responsibility Matters. This provision applies to solicitations where the contract value is expected to exceed the simplified acquisition

threshold.
(vii) 52.209-11, Representation by Corporations Regarding Delinquent Tax Liability or a Felony Conviction under any Federal Law. This provision applies to all solicitations.
(viii) 52.214-14, Place of Performance--Sealed Bidding. This provision applies to invitations for bids except those in which the place of performance is specified by the Government.
(ix) 52.215-6, Place of Performance. This provision applies to solicitations unless the place of performance is specified by the Government.
(x) 52.219-1, Small Business Program Representations (Basic & Alternate I). This provision applies to solicitations when the contract will be performed in the United States or its outlying areas.

(A) The basic provision applies when the solicitations are issued by other than DoD, NASA, and the Coast Guard.

(B) The provision with its Alternate I applies to solicitations issued by DoD, NASA, or the Coast Guard.

(xi) 52.219-2, Equal Low Bids. This provision applies to solicitations when contracting by sealed bidding and the contract will be performed in the United States or its outlying areas.

(xii) 52.222-22, Previous Contracts and Compliance Reports. This provision applies to solicitations that include the clause at 52.222-26, Equal Opportunity.

(xiii) 52.222-25, Affirmative Action Compliance. This provision applies to solicitations, other than those for construction, when the solicitation includes the clause at 52.222-26, Equal Opportunity.

(xiv) 52.222-38, Compliance with Veterans' Employment Reporting Requirements. This provision applies to solicitations when it is anticipated the contract award will exceed the simplified acquisition threshold and the contract is not for acquisition of commercial items.

(xv) 52.223-1, Biobased Product Certification. This provision applies to solicitations that require the delivery or specify the use of USDA-designated items; or include the clause at 52.223-2, Affirmative Procurement of Biobased Products Under Service and Construction Contracts.

(xvi) 52.223-4, Recovered Material Certification. This provision applies to solicitations that are for, or specify the use of, EPA- designated items.

(xvii) 52.225-2, Buy American Certificate. This provision applies to solicitations containing the clause at 52.225-1.

(xviii) 52.225-4, Buy American--Free Trade Agreements--Israeli Trade Act Certificate. (Basic, Alternates I, II, and III.) This provision applies to solicitations containing the clause at 52.225- 3.

(A) If the acquisition value is less than $25,000, the basic provision applies.

(B) If the acquisition value is $25,000 or more but is less than $50,000, the provision with its Alternate I applies.

(C) If the acquisition value is $50,000 or more but is less than $77,533, the provision with its Alternate II applies.

(D) If the acquisition value is $79,507 or more but is less than $100,000, the provision with its Alternate III applies.

(xix) 52.225-6, Trade Agreements Certificate. This provision applies to solicitations containing the clause at 52.225-5.

(xx) 52.225-20, Prohibition on Conducting Restricted Business Operations in Sudan--Certification. This provision applies to all solicitations.

(xxi) 52.225-25, Prohibition on Contracting with Entities Engaging in Certain Activities or Transactions Relating to Iran—Representation and Certification. This provision applies to all solicitations.

(xxii) 52.226-2, Historically Black College or University and Minority Institution Representation. This provision applies to solicitations for research, studies, supplies, or services of the type normally acquired from higher educational institutions.

(2) The following representations or certifications are applicable as indicated by the Contracting Officer:

[*Contracting Officer check as appropriate.*]

___ (i) 52.204-17, Ownership or Control of Offeror.

___ (ii) 52.222-18, Certification Regarding Knowledge of Child Labor for Listed End Products.

___ (iii) 52.222-48, Exemption from Application of the Service Contract Labor Standards to Contracts for Maintenance, Calibration, or Repair of Certain Equipment--Certification.

___ (iv) 52.222-52 Exemption from Application of the Service Contract Labor Standards to Contracts for Certain Services--Certification.

___ (v) 52.223-9, with its Alternate I, Estimate of Percentage of Recovered Material Content for EPA-Designated Products (Alternate I only).

___ (vi) 52.227-6, Royalty Information.

___ (A) Basic.

___ (B) Alternate I.

___ (vii) 52.227-15, Representation of Limited Rights Data and Restricted Computer Software.

(d) The offeror has completed the annual representations and certifications electronically via the SAM Web site accessed through https://www.acquisition.gov . After reviewing the SAM database information,

the offeror verifies by submission of the offer that the representations and certifications currently posted electronically that apply to this solicitation as indicated in paragraph (c) of this provision have been entered or updated within the last 12 months, are current, accurate, complete, and applicable to this solicitation (including the business size standard applicable to the NAICS code referenced for this solicitation), as of the date of this offer and are incorporated in this offer by reference (see FAR 4.1201); except for the changes identified below *[offeror to insert changes, identifying change by clause number, title, date]*. These amended representation(s) and/or certification(s) are also incorporated in this offer and are current, accurate, and complete as of the date of this offer.

| FAR Clause | Title | Date | Change |
|---|---|---|---|
| | | | |
| | | | |

Any changes provided by the offeror are applicable to this solicitation only, and do not result in an update to the representations and certifications posted on SAM.

(End of Provision)

L.3. 52.225-18 PLACE OF MANUFACTURE (SEPT 2006)

(a) *Definitions*. As used in this clause—

" Manufactured end product" means any end product in Federal Supply Classes (FSC) 1000-9999, except—

(1) FSC 5510, Lumber and Related Basic Wood Materials;
(2) Federal Supply Group (FSG) 87, Agricultural Supplies;
(3) FSG 88, Live Animals;
(4) FSG 89, Food and Related Consumables;
(5) FSC 9410, Crude Grades of Plant Materials;
(6) FSC 9430, Miscellaneous Crude Animal Products, Inedible;
(7) FSC 9440, Miscellaneous Crude Agricultural and Forestry Products;
(8) FSC 9610, Ores;
(9) FSC 9620, Minerals, Natural and Synthetic; and
(10) FSC 9630, Additive Metal Materials.

"Place of manufacture" means the place where an end product is assembled out of components, or otherwise made or processed from raw materials into the finished product that is to be provided to the Government. If a product is disassembled and reassembled, the place of reassembly is not the place of manufacture.

(b) For statistical purposes only, the offeror shall indicate whether the place of manufacture of the end products it expects to provide in response to this solicitation is predominantly—

(1) [ ] In the United States (Check this box if the total anticipated price of offered end products manufactured in the United States exceeds the total anticipated price of offered end products manufactured outside the United States); or
(2) [ ] Outside the United States.

(End of provision)

L.4 AUTHORIZED CONTRACTOR ADMINISTRATOR

If the offeror does not fill-in the blanks below, the official who signed the offer will be deemed to be the offeror's representative for Contract Administration, which includes all matters pertaining to payments.

| |
|---|
| Name: |
| Telephone Number: |
| Address: |
| |
| |

**[Proposal Note: If the bidder/offeror has indicated "yes" in blocks (a)(1), (2), or (3) of the following provision, the bidder/offeror shall include Defense Base Act insurance costs covering those employees in their proposed prices. The bidder/offeror may obtain DBA insurance directly from any Department of Labor approved providers at the DOL website at *http://www.dol.gov/owcp/dlhwc/lscarrier.htm*.]**

L.5 652.228-70 DEFENSE BASE ACT – COVERED CONTRACTOR EMPLOYEES (JUN 2006)

(a) Bidders/offerors shall indicate below whether or not any of the following categories of employees will be employed on the resultant contract, and, if so, the number of such employees:

| Category | Yes/No | Number | |
|---|---|---|---|
| (1) United States citizens or residents | | | |
| (2) Individuals hired in the United States, regardless of citizenship | | | |
| (3) Local nationals or third country nationals where contract performance takes place in a country where there are no local workers' compensation laws | | local nationals: | |
| | | third-country nationals: | |
| (4) Local nationals or third country nationals where contract performance takes place in a country where there are local workers' compensation laws | | local nationals: | |
| | | third-country nationals: | |

(b) The Contracting Officer has determined that for performance in the country of

- ☐ Workers' compensation laws exist that will cover local nationals and third country nationals.
- ☐ Workers' compensation laws do not exist that will cover local nationals and third country nationals.

(c) If the bidder/offeror has indicated "yes" in block (a)(4) of this provision, the bidder/offeror shall not purchase Defense Base Act insurance for those employees. However, the bidder/offeror shall assume liability toward the employees and their beneficiaries for war-hazard injury, death, capture, or detention, in accordance with the clause at FAR 52.228-4.

(d) RESERVED

(End of provision)