Embassy of the United States of America

American Embassy San Salvador
July 23, 2015

TO: Prospective Offerors

Subject: Request for Quotations number SES60015Q0059

The American Embassy San Salvador has a requirement for a contractor to provide 26 doors, frames, hinges and locks to support FAC activities. You are invited to submit a quotation. The Request for Quotations (RFQ) consists of the following sections:

1. Standard Form SF-18
2. List of specifications.
3. Late quotation rules and evaluation method.

The Embassy plans to award a purchase order. You are encouraged to make your quotation competitive. You are also cautioned against any collusion with other potential offerors with regard to price quotations to be submitted. The RFQ does not commit the American Embassy to make any award. The Embassy may cancel this RFQ or any part of it.

Please read the RFQ carefully, and if you are interested, submit your quotation. Return the completed SF-18 to the address shown in Block 5a of the SF-18 by August 7, 2015. Oral quotations will not be accepted.

Sincerely,

Scott Bowers
Contracting Officer

REQUEST FOR QUOTATIONS *(THIS IS NOT AN ORDER)*	THIS RFQ [ ] IS [x] IS NOT A SMALL BUSINESS-SMALL PURCHASE SET-ASIDE (52.219-4)	PAGE 2	OF 1	PAGES 36

1. REQUEST NO.	2. DATE ISSUED	3. REQUISITION/PURCHASE REQUEST NO.	4. CERT. FOR NAT. DEF. UNDER BDSA REG. 2 AND/OR DMS REG. 1	RATING
SES60015Q0059	07/23/2015	PR4115750		

5A. ISSUED BY AMERICAN EMBASSY SAN SALVADOR
GSO/PROCUREMENT

6. DELIVER BY *(Date)* Sept 18, 2015

5B. FOR INFORMATION CALL: *(Name and telephone no.) (No collect calls*

NAME	TELEPHONE NUMBER	
	AREA CODE	NUMBER
ANA BEATRIZ COTO cotoab@state.gov		2501-2808

7. DELIVERY
FOB DESTINATION X OTHER *(See Schedule)*

8. TO:

a. NAME	b. COMPANY	
c. STREET ADDRESS		
d. CITY	e. STATE	f. ZIP CODE

9. DESTINATION

a. NAME OF CONSIGNEE	
FAC	
b. STREET ADDRESS	
AMERICAN EMBASSY SAN SALVADOR	
c. CITY	
d. STATE	e. ZIP CODE

10. PLEASE FURNISH QUOTATIONS TO THE ISSUING OFFICE IN BLOCK 5A ON OR BEFORE CLOSE OF BUSINESS *(Date)*
August 7, 2015

IMPORTANT: This is a request for information, and quotations furnished are not offers. If you are unable to quote, please s indicate on this form and return it to the address in Block 5A. This request does not commit the Government to pay any costs incurred in the preparation of the submission of this quotation or to contract for supplies or services. Supplies are of domestic origin unless otherwise indicated by quoter. Any representations and/or certifications attached to this Request for Quotations must be completed by the quoter

11. SCHEDULE *(Include applicable Federal, State and local taxes)*

ITEM NO. (a)	SUPPLIES/SERVICES (b)	QUANTITY (c)	UNIT (d)	UNIT PRICE (e)	AMOUNT (f)
	26 STEEL DOOR FRAMES 26 WOOD DOORS				

12 DISCOUNT FOR PROMPT PAYMENT	a. 10 CALENDAR DAYS	b. 20 CALENDAR DAYS	c. 30 CALENDAR DAYS	d. CALENDAR DAYS	
	%	%	%	NUMBER	%

NOTE: Additional provisions and representations [ ] are [ ] are not attached.

13 NAME AND ADDRESS OF QUOTER			14 SIGNATURE OF PERSON AUTHORIZED TO SIGN QUOTATION	15 DATE OF QUOTATION
a. NAME OF QUOTER				
b. STREET ADDRESS			16. SIGNER	
c. COUNTY			a. NAME (Type or print)	b. TELEPHONE
d. CITY	e. STATE	f. ZIP CODE	c. TITLE (Type or print)	AREA CODE NUMBER

STANDARD FORM 18

This is a request of quotation for 26 doors, frames, hinges and locks as per Attachment A.

+ Shipping charges to JIT Warehouses, MIA (for international vendors)
Prices without local TAX (IVA).
All correspondence in English language.
Please address any question and/or your quote by COB August 7, 2015 to:

Ana Beatriz Coto
American Embassy - El Salvador
Ph. (503)2501-2808
cotoab@state.gov

Evalutation Factors:

- Award will be made to the lowest priced, acceptable, responsible offeror.
- The Government reserves the right to reject proposals that are unreasonably low or high in price.
- The Government will determine acceptability by assessing the offeror's compliance with the terms of the RFQ .
- The Government will determine contractor responsibility by analyzing whether the apparent successful offeror complies with the requirements of FAR 9.1, including:
  - adequate financial resources or the ability to obtain them;
  - ability to comply with the required performance period, taking into consideration all existing commercial and governmental business commitments;
  - satisfactory record of integrity and business ethics;
  - necessary organization, experience, and skills or the ability to obtain them;
  - necessary equipment and facilities or the ability to obtain them; and
  - be otherwise qualified and eligible to receive an award under applicable laws and regulations.

CLAUSES FOR PURCHASE ORDERS AND BLANKET PURCHASE AGREEMENTS AWARDED BY OVERSEAS CONTRACTING ACTIVITIES
(Current thru FAC 2005-69)

COMMERCIAL ITEMS

FAR 52.252-2 Clauses Incorporated By Reference (FEB 1998)

This purchase order or BPA incorporates the following clauses by reference, with the same force and effect as if they were given in full text. Upon request, the Contracting Officer will make their full text available. Also, the full text of a clause may be accessed electronically at this address: https://www.acquisition.gov/far

DOSAR clauses may be accessed at: http://www.statebuy.state.gov/dosar/dosartoc.htm

FEDERAL ACQUISITION REGULATION (48 CFR Chapter 1) CLAUSES

NUMBER	TITLE	DATE
52.204-9	Personal Identity Verification of Contractor Personnel (if contractor requires physical access to a federally-controlled facility or access to a Federal information system)	JAN 2011
52.225-19	Contractor Personnel in a Diplomatic or Consular Mission Outside the United States (applies to services at danger pay posts only)	MAR 2008
52.225-25	Prohibition on Contracting with Entities Engaging in Sanctioned Activities Relating to Iran – Representation and Certification (applies to acquisitions above the micropurchase threshold)	DEC 2012
52.227-19	Commercial Computer Software License (if order is for software)	DEC 2007
52.228-3	Workers' Compensation Insurance (Defense Base Act) (if order is for services and contractor employees are covered by Defense Base Act insurance)	APR 1984
52.228-4	Workers' Compensation and War-Hazard Insurance (if order is for services and contractor employees are not covered by Defense Base Act insurance)	APR 1984

The following clause is provided in full text:

52.214-4 Contract Terms and Conditions – Commercial Items (SEPT 2013)

(a) Inspection/Acceptance. The Contractor shall only tender for acceptance those items that conform to the requirements of this contract. The Government reserves the right to inspect or test any supplies or services that have been tendered for acceptance. The Government may require repair or replacement of nonconforming supplies or reperformance of nonconforming services at no increase in contract price. If repair/replacement or reperformance will not correct the defects or is not possible, the Government may seek an equitable price reduction or adequate consideration for acceptance of nonconforming supplies or services. The Government must exercise its post-acceptance rights—

(1) Within a reasonable time after the defect was discovered or should have been discovered; and

(2) Before any substantial change occurs in the condition of the item, unless the change is due to the defect in the item.

(b) Assignment. The Contractor or its assignee may assign its rights to receive payment due as a result of performance of this contract to a bank, trust company, or other financing institution, including any Federal lending agency in accordance with the Assignment of Claims Act (31 U.S.C. 3727). However, when a third party makes payment (e.g., use of the Governmentwide commercial purchase card), the Contractor may not assign its rights to receive payment under this contract.

(c) Changes. Changes in the terms and conditions of this contract may be made only by written agreement of the parties.

(d) Disputes. This contract is subject to the Contract Disputes Act of 1978, as amended (41 U.S.C. 601-613). Failure of the parties to this contract to reach agreement on any request for equitable adjustment, claim, appeal or action arising under or relating to this contract shall be a dispute to be resolved in accordance with the clause at FAR 52.233-1, Disputes, which is incorporated herein by reference. The Contractor shall proceed diligently with performance of this contract, pending final resolution of any dispute arising under the contract.

(e) Definitions. The clause at FAR 52.202-1, Definitions, is incorporated herein by reference.

(f) Excusable delays. The Contractor shall be liable for default unless nonperformance is caused by an occurrence beyond the reasonable control of the Contractor and without its fault or negligence such as, acts of God or the public enemy, acts of the Government in either its sovereign or contractual capacity, fires, floods, epidemics, quarantine restrictions, strikes, unusually severe weather, and delays of common carriers. The Contractor shall notify the Contracting Officer in writing as soon as it is reasonably possible after the commencement of any excusable delay, setting forth the full particulars in connection therewith, shall remedy such occurrence with all reasonable dispatch, and shall promptly give written notice to the Contracting Officer of the cessation of such occurrence.

(g) Invoice.

(1) The Contractor shall submit an original invoice and three copies (or electronic invoice, if authorized) to the address designated in the contract to receive invoices. An invoice must include—

(i) Name and address of the Contractor;

(ii) Invoice date and number;

(iii) Contract number, contract line item number and, if applicable, the order number;

(iv) Description, quantity, unit of measure, unit price and extended price of the items delivered;

(v) Shipping number and date of shipment, including the bill of lading number and weight of shipment if shipped on Government bill of lading;

(vi) Terms of any discount for prompt payment offered;

(vii) Name and address of official to whom payment is to be sent;

(viii) Name, title, and phone number of person to notify in event of defective invoice; and

(ix) Taxpayer Identification Number (TIN). The Contractor shall include its TIN on the invoice only if required elsewhere in this contract.

(x) Electronic funds transfer (EFT) banking information.

(A) The Contractor shall include EFT banking information on the invoice only if required elsewhere in this contract.

(B) If EFT banking information is not required to be on the invoice, in order for the invoice to be a proper invoice, the Contractor shall have submitted correct EFT banking information in accordance with the applicable solicitation provision, contract clause (e.g., 52.232-33, Payment by Electronic Funds Transfer—System for Award Management, or 52.232-34, Payment by Electronic Funds Transfer—Other Than System for Award Management), or applicable agency procedures.

(C) EFT banking information is not required if the Government waived the requirement to pay by EFT.

(2) Invoices will be handled in accordance with the Prompt Payment Act (31 U.S.C. 3903) and Office of Management and Budget (OMB) prompt payment regulations at 5 CFR Part 1315.

(h) Patent indemnity. The Contractor shall indemnify the Government and its officers, employees and agents against liability, including costs, for actual or alleged direct or contributory infringement of, or inducement to infringe, any United States or foreign patent, trademark or copyright, arising out of the performance of this contract, provided the Contractor is reasonably notified of such claims and proceedings.

(i) Payment.—

(1) Items accepted. Payment shall be made for items accepted by the Government that have been delivered to the delivery destinations set forth in this contract.

(2) Prompt payment. The Government will make payment in accordance with the Prompt Payment Act (31 U.S.C. 3903) and prompt payment regulations at 5 CFR Part 1315.

(3) Electronic Funds Transfer (EFT). If the Government makes payment by EFT, see 52.212-5(b) for the appropriate EFT clause.

(4) Discount. In connection with any discount offered for early payment, time shall be computed from the date of the invoice. For the purpose of computing the discount earned, payment shall be considered to have been made on the date which appears on the payment check or the specified payment date if an electronic funds transfer payment is made.

(5) Overpayments. If the Contractor becomes aware of a duplicate contract financing or invoice payment or that the Government has otherwise overpaid on a contract financing or invoice payment, the Contractor shall—

(i) Remit the overpayment amount to the payment office cited in the contract along with a description of the overpayment including the—

(A) Circumstances of the overpayment (e.g., duplicate payment, erroneous payment, liquidation errors, date(s) of overpayment);

(B) Affected contract number and delivery order number, if applicable;

(C) Affected contract line item or subline item, if applicable; and

(D) Contractor point of contact.

(ii) Provide a copy of the remittance and supporting documentation to the Contracting Officer.

(6) Interest.

(i) All amounts that become payable by the Contractor to the Government under this contract shall bear simple interest from the date due until paid unless paid within 30 days of becoming due. The interest rate shall be the interest rate established by the Secretary of the Treasury as provided in Section 611 of the Contract Disputes Act of 1978 (Public Law 95-563), which is applicable to the period in which the amount becomes due, as provided in (i)(6)(v) of this clause, and then at the rate applicable for each six-month period as fixed by the Secretary until the amount is paid.

(ii) The Government may issue a demand for payment to the Contractor upon finding a debt is due under the contract.

(iii) Final decisions. The Contracting Officer will issue a final decision as required by 33.211 if—

(A) The Contracting Officer and the Contractor are unable to reach agreement on the existence or amount of a debt within 30 days;

(B) The Contractor fails to liquidate a debt previously demanded by the Contracting Officer within the timeline specified in the demand for payment unless the amounts were not repaid because the Contractor has requested an installment payment agreement; or

(C) The Contractor requests a deferment of collection on a debt previously demanded by the Contracting Officer (see 32.607-2).

(iv) If a demand for payment was previously issued for the debt, the demand for payment included in the final decision shall identify the same due date as the original demand for payment.

(v) Amounts shall be due at the earliest of the following dates:

(A) The date fixed under this contract.

(B) The date of the first written demand for payment, including any demand for payment resulting from a default termination.

(vi) The interest charge shall be computed for the actual number of calendar days involved beginning on the due date and ending on—

(A) The date on which the designated office receives payment from the Contractor;

(B) The date of issuance of a Government check to the Contractor from which an amount otherwise payable has been withheld as a credit against the contract debt; or
(C) The date on which an amount withheld and applied to the contract debt would otherwise have become payable to the Contractor.

(vii) The interest charge made under this clause may be reduced under the procedures prescribed in 32.608-2 of the Federal Acquisition Regulation in effect on the date of this contract.

(j) Risk of loss. Unless the contract specifically provides otherwise, risk of loss or damage to the supplies provided under this contract shall remain with the Contractor until, and shall pass to the Government upon:

(1) Delivery of the supplies to a carrier, if transportation is f.o.b. origin; or

(2) Delivery of the supplies to the Government at the destination specified in the contract, if transportation is f.o.b. destination.

(k) Taxes. The contract price includes all applicable Federal, State, and local taxes and duties.

(l) Termination for the Government's convenience. The Government reserves the right to terminate this contract, or any part hereof, for its sole convenience. In the event of such termination, the Contractor shall immediately stop all work hereunder and shall immediately cause any and all of its suppliers and subcontractors to cease work. Subject to the terms of this contract, the Contractor shall be paid a percentage of the contract price reflecting the percentage of the work performed prior to the notice of termination, plus reasonable charges the Contractor can demonstrate to the satisfaction of the Government using its standard record keeping system, have resulted from the termination. The Contractor shall not be required to comply with the cost accounting standards or contract cost principles for this purpose. This paragraph does not give the Government any right to audit the Contractor's records. The Contractor shall not be paid for any work performed or costs incurred which reasonably could have been avoided.

(m) Termination for cause. The Government may terminate this contract, or any part hereof, for cause in the event of any default by the Contractor, or if the Contractor fails to comply with any contract terms and conditions, or fails to provide the Government, upon request, with adequate assurances of future performance. In the event of termination for cause, the Government shall not be liable to the Contractor for any amount for supplies or services not accepted, and the Contractor shall be liable to the Government for any and all rights and remedies provided by law. If it is determined that the Government improperly terminated this contract for default, such termination shall be deemed a termination for convenience.

(n) Title. Unless specified elsewhere in this contract, title to items furnished under this contract shall pass to the Government upon acceptance, regardless of when or where the Government takes physical possession.

(o) Warranty. The Contractor warrants and implies that the items delivered hereunder are merchantable and fit for use for the particular purpose described in this contract.

(p) Limitation of liability. Except as otherwise provided by an express warranty, the Contractor will not be liable to the Government for consequential damages resulting from any defect or deficiencies in accepted items.

(q) Other compliances. The Contractor shall comply with all applicable Federal, State and local laws, executive orders, rules and regulations applicable to its performance under this contract.

(r) Compliance with laws unique to Government contracts. The Contractor agrees to comply with 31 U.S.C. 1352 relating to limitations on the use of appropriated funds to influence certain Federal contracts; 18 U.S.C. 431 relating to officials not to benefit; 40 U.S.C. 3701, et seq., Contract Work Hours and Safety Standards Act; 41 U.S.C. 51-58, Anti-Kickback Act of 1986; 41 U.S.C. 4712 and 10 U.S.C. 2409 relating to whistleblower protections; 49 U.S.C. 40118, Fly American; and 41 U.S.C. 423 relating to procurement integrity.

(s) Order of precedence. Any inconsistencies in this solicitation or contract shall be resolved by giving precedence in the following order:

(1) The schedule of supplies/services.

(2) The Assignments, Disputes, Payments, Invoice, Other Compliances, Compliance with Laws Unique to Government Contracts, and Unauthorized Obligations paragraphs of this clause;

(3) The clause at 52.212-5.

(4) Addenda to this solicitation or contract, including any license agreements for computer software.

(5) Solicitation provisions if this is a solicitation.

(6) Other paragraphs of this clause.

(7) The Standard Form 1449.

(8) Other documents, exhibits, and attachments.

(9) The specification.

(t) System for Award Management (SAM).

(1) Unless exempted by an addendum to this contract, the Contractor is responsible during performance and through final payment of any contract for the accuracy and completeness of the data within the SAM database, and for any liability resulting from the Government's reliance on inaccurate or incomplete data. To remain registered in the SAM database after the initial registration, the Contractor is required to review and update on an annual basis from the date of initial registration or subsequent updates its information in the SAM database to ensure it is current, accurate and complete. Updating information in the SAM does not alter the terms and conditions of this contract and is not a substitute for a properly executed contractual document.

(2)(i) If a Contractor has legally changed its business name, "doing business as" name, or division name (whichever is shown on the contract), or has transferred the assets used in performing the contract, but has not completed the necessary requirements regarding novation and change-of-name agreements in FAR Subpart 42.12, the Contractor shall provide the responsible Contracting Officer a minimum of one business day's written notification of its intention to (A) change the name in the SAM database; (B) comply with the requirements of Subpart 42.12; and (C) agree in writing to the timeline and procedures specified by the responsible Contracting Officer. The Contractor must provide with the notification sufficient documentation to support the legally changed name.

(ii) If the Contractor fails to comply with the requirements of paragraph (t)(2)(i) of this clause, or fails to perform the agreement at paragraph (t)(2)(i)(C) of this clause, and, in the absence of a properly executed novation or change-of-name agreement, the SAM information that shows the Contractor to be other than the Contractor indicated in the contract will be considered to be incorrect information within the meaning of the "Suspension of Payment" paragraph of the electronic funds transfer (EFT) clause of this contract.

(3) The Contractor shall not change the name or address for EFT payments or manual payments, as appropriate, in the SAM record to reflect an assignee for the purpose of assignment of claims (see Subpart 32.8, Assignment of Claims). Assignees shall be separately registered in the SAM database. Information provided to the Contractor's SAM record that indicates payments, including those made by EFT, to an ultimate recipient other than that Contractor will be considered to be incorrect information within the meaning of the "Suspension of payment" paragraph of the EFT clause of this contract.

(4) Offerors and Contractors may obtain information on registration and annual confirmation requirements via SAM accessed through https://www.acquisition.gov.

(u) Unauthorized Obligations

(1) Except as stated in paragraph (u)(2) of this clause, when any supply or service acquired under this contract is subject to any End User License Agreement (EULA), Terms of Service (TOS), or similar legal instrument or agreement, that includes any clause requiring the Government to indemnify the Contractor or any person or entity for damages, costs, fees, or any other loss or liability that would create an Anti-Deficiency Act violation (31 U.S.C. 1341), the following shall govern:

(i) Any such clause is unenforceable against the Government.

(ii) Neither the Government nor any Government authorized end user shall be deemed to have agreed to such clause by virtue of it appearing in the EULA, TOS, or similar legal instrument or agreement. If the EULA, TOS, or similar legal instrument or agreement is invoked through an "I agree" click box or other

comparable mechanism (e.g., "click-wrap" or "browse-wrap" agreements), execution does not bind the Government or any Government authorized end user to such clause.

(iii) Any such clause is deemed to be stricken from the EULA, TOS, or similar legal instrument or agreement.

(2) Paragraph (u)(1) of this clause does not apply to indemnification by the Government that is expressly authorized by statute and specifically authorized under applicable agency regulations and procedures.

(End of clause)

52.212-5 CONTRACT TERMS AND CONDITIONS REQUIRED TO IMPLEMENT STATUTES OR EXECUTIVE ORDERS—COMMERCIAL ITEMS (SEPT 2013)

(a) The Contractor shall comply with the following Federal Acquisition Regulation (FAR) clauses, which are incorporated in this contract by reference, to implement provisions of law or Executive orders applicable to acquisitions of commercial items:

(1) 52.222-50, Combating Trafficking in Persons (Feb 2009) (22 U.S.C. 7104(g)).

___Alternate I (Aug 2007) of 52.222-50 (22 U.S.C. 7104(g)).

(2) 52.233-3, Protest After Award (AUG 1996) (31 U.S.C. 3553).

(3) 52.233-4, Applicable Law for Breach of Contract Claim (OCT 2004) (Pub. L. 108-77, 108-78).

(b) The Contractor shall comply with the FAR clauses in this paragraph (b) that the Contracting Officer has indicated as being incorporated in this contract by reference to implement provisions of law or Executive orders applicable to acquisitions of commercial items:

__ (1) 52.203-6, Restrictions on Subcontractor Sales to the Government (Sept 2006), with Alternate I (Oct 1995) (41 U.S.C. 253g and 10 U.S.C. 2402).

_X_ (2) 52.203-13, Contractor Code of Business Ethics and Conduct (Apr 2010) (Pub. L. 110-252, Title VI, Chapter 1 (41 U.S.C. 251 note)).

__ (3) 52.203-15, Whistleblower Protections under the American Recovery and Reinvestment Act of 2009 (June 2010) (Section 1553 of Pub. L. 111-5). (Applies to contracts funded by the American Recovery and Reinvestment Act of 2009.)

_X_ (4) 52.204-10, Reporting Executive Compensation and First-Tier Subcontract Awards (Jul 2013) (Pub. L. 109-282) (31 U.S.C. 6101 note).

__ (5) 52.204-11, American Recovery and Reinvestment Act—Reporting Requirements (Jul 2010) (Pub. L. 111-5).

__ (6) 52.209-6, Protecting the Government's Interest When Subcontracting with Contractors Debarred, Suspended, or Proposed for Debarment. (Aug 2013) (31 U.S.C. 6101 note).

__ (7) 52.209-9, Updates of Publicly Available Information Regarding Responsibility Matters (Jul 2013) (41 U.S.C. 2313).

__ (8) 52.209-10, Prohibition on Contracting with Inverted Domestic Corporations (May 2012) (section 738 of Division C of Pub. L. 112-74, section 740 of Division C of Pub. L. 111-117, section 743 of Division D of Pub. L. 111-8, and section 745 of Division D of Pub. L. 110-161).

__ (9) 52.219-3, Notice of HUBZone Set-Aside or Sole-Source Award (Nov 2011) (15 U.S.C. 657a).

__ (10) 52.219-4, Notice of Price Evaluation Preference for HUBZone Small Business Concerns (JAN 2011) (if the offeror elects to waive the preference, it shall so indicate in its offer) (15 U.S.C. 657a).

__ (11) [Reserved]

__ (12)(i) 52.219-6, Notice of Total Small Business Set-Aside (Nov 2011) (15 U.S.C. 644).

__ (ii) Alternate I (Nov 2011).

__ (iii) Alternate II (Nov 2011).

__ (13)(i) 52.219-7, Notice of Partial Small Business Set-Aside (June 2003) (15 U.S.C. 644).

__ *(ii) Alternate I (Oct 1995) of 52.219-7.*
__ *(iii) Alternate II (Mar 2004) of 52.219-7.*

__ *(14) 52.219-8, Utilization of Small Business Concerns (Jul 2013) (15 U.S.C. 637(d)(2) and (3)).*
__ *(15)(i) 52.219-9, Small Business Subcontracting Plan (Jul 2013) (15 U.S.C. 637(d)(4)).*
__ *(ii) Alternate I (Oct 2001) of 52.219-9.*
__ *(iii) Alternate II (Oct 2001) of 52.219-9.*
__ *(iv) Alternate III (Jul 2010) of 52.219-9.*
__ *(16) 52.219-13, Notice of Set-Aside of Orders (Nov 2011)(15 U.S.C. 644(r)).*
__ *(17) 52.219-14, Limitations on Subcontracting (Nov 2011) (15 U.S.C. 637(a)(14)).*
__ *(18) 52.219-16, Liquidated Damages—Subcontracting Plan (Jan 1999) (15 U.S.C. 637(d)(4)(F)(i)).*
__ *(19)(i) 52.219-23, Notice of Price Evaluation Adjustment for Small Disadvantaged Business Concerns (Oct 2008) (10 U.S.C. 2323) (if the offeror elects to waive the adjustment, it shall so indicate in its offer).*
__ *(ii) Alternate I (June 2003) of 52.219-23.*
__ *(20) 52.219-25, Small Disadvantaged Business Participation Program—Disadvantaged Status and Reporting (Jul 2013) (Pub. L. 103-355, section 7102, and 10 U.S.C. 2323).*
__ *(21) 52.219-26, Small Disadvantaged Business Participation Program— Incentive Subcontracting (Oct 2000) (Pub. L. 103-355, section 7102, and 10 U.S.C. 2323).*
__ *(22) 52.219-27, Notice of Service-Disabled Veteran-Owned Small Business Set-Aside (Nov 2011) (15 U.S.C. 657 f).*
__ *(23) 52.219-28, Post Award Small Business Program Rerepresentation (Jul 2013) (15 U.S.C. 632(a)(2)).*
__ *(24) 52.219-29, Notice of Set-Aside for Economically Disadvantaged Women-Owned Small Business (EDWOSB) Concerns (Jul 2013) (15 U.S.C. 637(m)).*
__ *(25) 52.219-30, Notice of Set-Aside for Women-Owned Small Business (WOSB) Concerns Eligible Under the WOSB Program (Jul 2013) (15 U.S.C. 637(m)).*
__ *(26) 52.222-3, Convict Labor (June 2003) (E.O. 11755).*
_X_ (27) 52.222-19, Child Labor—Cooperation with Authorities and Remedies (Mar 2012) (E.O. 13126).
__ (28) 52.222-21, Prohibition of Segregated Facilities (Feb 1999).
__ (29) 52.222-26, Equal Opportunity (Mar 2007) (E.O. 11246).
__ (30) 52.222-35, Equal Opportunity for Veterans (Sep 2010)(38 U.S.C. 4212).
__ (31) 52.222-36, Affirmative Action for Workers with Disabilities (Oct 2010) (29 U.S.C. 793).
__ (32) 52.222-37, Employment Reports on Veterans (Sep 2010) (38 U.S.C. 4212).
__ (33) 52.222-40, Notification of Employee Rights Under the National Labor Relations Act (Dec 2010) (E.O. 13496).
__ (34) 52.222-54, Employment Eligibility Verification (Jul 2012). (Executive Order 12989). (Not applicable to the acquisition of commercially available off-the-shelf items or certain other types of commercial items as prescribed in 22.1803.)
__ (35)(i) 52.223-9, Estimate of Percentage of Recovered Material Content for EPA–Designated Items (May 2008) (42 U.S.C. 6962(c)(3)(A)(ii)). (Not applicable to the acquisition of commercially available off-the-shelf items.)

__ (ii) Alternate I (May 2008) of 52.223-9 (42 U.S.C. 6962(i)(2)(C)). (Not applicable to the acquisition of commercially available off-the-shelf items.)

__ (36) 52.223-15, Energy Efficiency in Energy-Consuming Products (DEC 2007) (42 U.S.C. 8259b).

__ (37)(i) 52.223-16, IEEE 1680 Standard for the Environmental Assessment of Personal Computer Products (DEC 2007) (E.O. 13423).

__ (ii) Alternate I (DEC 2007) of 52.223-16.

_X_ (38) 52.223-18, Encouraging Contractor Policies to Ban Text Messaging While Driving (AUG 2011) (E.O. 13513).

__ (39) 52.225-1, Buy American Act—Supplies (Feb 2009) (41 U.S.C. 10a-10d).

__ (40)(i) 52.225-3, Buy American Act—Free Trade Agreements—Israeli Trade Act (Nov 2012) (41 U.S.C. chapter 83, 19 U.S.C. 3301 note, 19 U.S.C. 2112 note, 19 U.S.C. 3805 note, 19 U.S.C. 4001 note, Pub. L. 103-182, 108-77, 108-78, 108-286, 108-302, 109-53, 109-169, 109-283, 110-138, 112-41, 112-42, and 112-43).

__ (ii) Alternate I (Mar 2012) of 52.225-3.

__ (iii) Alternate II (Mar 2012) of 52.225-3.

__ (iv) Alternate III (Nov 2012) of 52.225-3.

__ (41) 52.225-5, Trade Agreements (SEPT 2013) (19 U.S.C. 2501, *et seq.*, 19 U.S.C. 3301 note).

_X_ (42) 52.225-13, Restrictions on Certain Foreign Purchases (June 2008) (E.O.'s, proclamations, and statutes administered by the Office of Foreign Assets Control of the Department of the Treasury).

__ (43) 52.225-26, Contractors Performing Private Security Functions Outside the United States (Jul 2013) (Section 862, as amended, of the National Defense Authorization Act for Fiscal Year 2008; 10 U.S.C. 2302 Note).

__ (44) 52.226-4, Notice of Disaster or Emergency Area Set-Aside (Nov 2007) (42 U.S.C. 5150).

__ (45) 52.226-5, Restrictions on Subcontracting Outside Disaster or Emergency Area (Nov 2007) (42 U.S.C. 5150).

__ (46) 52.232-29, Terms for Financing of Purchases of Commercial Items (Feb 2002) (41 U.S.C. 255(f), 10 U.S.C. 2307(f)).

__ (47) 52.232-30, Installment Payments for Commercial Items (Oct 1995) (41 U.S.C. 255(f), 10 U.S.C. 2307(f)).

__ (48) 52.232-33, Payment by Electronic Funds Transfer—System for Award Management (Jul 2013) (31 U.S.C. 3332).

_X_ (49) 52.232-34, Payment by Electronic Funds Transfer—Other than System for Award Management (Jul 2013) (31 U.S.C. 3332).

__ (50) 52.232-36, Payment by Third Party (Jul 2013) (31 U.S.C. 3332).

__ (51) 52.239-1, Privacy or Security Safeguards (Aug 1996) (5 U.S.C. 552a).

__ (52)(i) 52.247-64, Preference for Privately Owned U.S.-Flag Commercial Vessels (Feb 2006) (46 U.S.C. Appx. 1241(b) and 10 U.S.C. 2631).

__ (ii) Alternate I (Apr 2003) of 52.247-64.

(c) The Contractor shall comply with the FAR clauses in this paragraph (c), applicable to commercial services, that the Contracting Officer has indicated as being incorporated in this contract by reference to implement provisions of law or Executive orders applicable to acquisitions of commercial items:

__ (1) 52.222-41, Service Contract Act of 1965 (Nov 2007) (41 U.S.C. 351, *et seq.*).

__ (2) 52.222-42, Statement of Equivalent Rates for Federal Hires (May 1989) (29 U.S.C. 206 and 41 U.S.C. 351, *et seq.*).

__ (3) 52.222-43, Fair Labor Standards Act and Service Contract Act—Price Adjustment (Multiple Year and Option Contracts) (Sep 2009) (29 U.S.C. 206 and 41 U.S.C. 351, *et seq.*).

__ (4) 52.222-44, Fair Labor Standards Act and Service Contract Act—Price Adjustment (Sep 2009) (29 U.S.C. 206 and 41 U.S.C. 351, *et seq.*).

__ (5) 52.222-51, Exemption from Application of the Service Contract Act to Contracts for Maintenance, Calibration, or Repair of Certain Equipment—Requirements (Nov 2007) (41 351, *et seq.*).

__ (6) 52.222-53, Exemption from Application of the Service Contract Act to Contracts for Certain Services—Requirements (Feb 2009) (41 U.S.C. 351, *et seq.*).

__ (7) 52.222-17, Nondisplacement of Qualified Workers (JAN 2013) (E.O.13495).

__ (8) 52.226-6, Promoting Excess Food Donation to Nonprofit Organizations (Mar 2009) (Pub. L. 110-247).

__ (9) 52.237-11, Accepting and Dispensing of $1 Coin (Sept 2008) (31 U.S.C. 5112(p)(1)).

(d) *Comptroller General Examination of Record*. The Contractor shall comply with the provisions of this paragraph (d) if this contract was awarded using other than sealed bid, is in excess of the simplified acquisition threshold, and does not contain the clause at 52.215-2, Audit and Records—Negotiation.

(1) The Comptroller General of the United States, or an authorized representative of the Comptroller General, shall have access to and right to examine any of the Contractor's directly pertinent records involving transactions related to this contract.

(2) The Contractor shall make available at its offices at all reasonable times the records, materials, and other evidence for examination, audit, or reproduction, until 3 years after final payment under this contract or for any shorter period specified in FAR Subpart 4.7, Contractor Records Retention, of the other clauses of this contract. If this contract is completely or partially terminated, the records relating to the work terminated shall be made available for 3 years after any resulting final termination settlement. Records relating to appeals under the disputes clause or to litigation or the settlement of claims arising under or relating to this contract shall be made available until such appeals, litigation, or claims are finally resolved.

(3) As used in this clause, records include books, documents, accounting procedures and practices, and other data, regardless of type and regardless of form. This does not require the Contractor to create or maintain any record that the Contractor does not maintain in the ordinary course of business or pursuant to a provision of law.

(e)(1) Notwithstanding the requirements of the clauses in paragraphs (a), (b), (c), and (d) of this clause, the Contractor is not required to flow down any FAR clause, other than those in this paragraph (e)(1) in a subcontract for commercial items. Unless otherwise indicated below, the extent of the flow down shall be as required by the clause—

(i) 52.203-13, Contractor Code of Business Ethics and Conduct (Apr 2010) (Pub. L. 110-252, Title VI, Chapter 1 (41 U.S.C. 251 note)).

(ii) 52.219-8, Utilization of Small Business Concerns (Jul 2013) (15 U.S.C. 637(d)(2) and (3)), in all subcontracts that offer further subcontracting opportunities. If the subcontract (except subcontracts to small business concerns) exceeds $650,000 ($1.5 million for construction of any public facility), the subcontractor must include 52.219-8 in lower tier subcontracts that offer subcontracting opportunities.

(iii) 52.222-17, Nondisplacement of Qualified Workers (JAN 2013) (E.O. 13495). Flow down required in accordance with paragraph (l) of FAR clause 52.222-17.

(iv) 52.222-26, Equal Opportunity (Mar 2007) (E.O. 11246).

(v) 52.222-35, Equal Opportunity for Veterans (Sep 2010) (38 U.S.C. 4212).

(vi) 52.222-36, Affirmative Action for Workers with Disabilities (Oct 2010) (29 U.S.C. 793).

(vii) 52.222-40, Notification of Employee Rights Under the National Labor Relations Act (Dec 2010) (E.O. 13496). Flow down required in accordance with paragraph (f) of FAR clause 52.222-40.

(viii) 52.222-41, Service Contract Act of 1965 (Nov 2007) (41 U.S.C. 351, *et seq.*).

(ix) 52.222-50, Combating Trafficking in Persons (Feb 2009) (22 U.S.C. 7104(g)).

___Alternate I (Aug 2007) of 52.222-50 (22 U.S.C. 7104(g)).

(x) 52.222-51, Exemption from Application of the Service Contract Act to Contracts for Maintenance, Calibration, or Repair of Certain Equipment-Requirements (Nov 2007) (41 U.S.C. 351, *et seq.*).

(xi) 52.222-53, Exemption from Application of the Service Contract Act to Contracts for Certain Services-Requirements (Feb 2009) (41 U.S.C. 351, *et seq.*).

(xii) 52.222-54, Employment Eligibility Verification (JUL 2012).

(xiii) 52.225-26, Contractors Performing Private Security Functions Outside the United States (Jul 2013) (Section 862, as amended, of the National Defense Authorization Act for Fiscal Year 2008; 10 U.S.C. 2302 Note).

(xiv) 52.226-6, Promoting Excess Food Donation to Nonprofit Organizations (Mar 2009) (Pub. L. 110-247). Flow down required in accordance with paragraph (e) of FAR clause 52.226-6.

(xv) 52.247-64, Preference for Privately Owned U.S.-Flag Commercial Vessels (Feb 2006) (46 U.S.C. Appx. 1241(b) and 10 U.S.C. 2631). Flow down required in accordance with paragraph (d) of FAR clause 52.247-64.

(2) While not required, the contractor may include in its subcontracts for commercial items a minimal number of additional clauses necessary to satisfy its contractual obligations.

(End of clause)

DEPARTMENT OF STATE ACQUISITION REGULATION (48 CFR Chapter 6) CLAUSES

NUMBER	TITLE	DATE
652.225-71	Section 8(a) of the Export Administration Act of 1979, As Amended (if order exceeds simplified acquisition threshold)	AUG 1999
652.229-70	Excise Tax Exemption Statement for Contractors Within the United States (for supplies to be delivered to an overseas post)	JUL 1988
652.229-71	Personal Property Disposition at Posts Abroad	AUG 1999
652.237-72	Observance of Legal Holidays and Administrative Leave (for services where performance will be on-site in a Department of State facility)	APR 2004
652.239-71	Security Requirements for Unclassified Information Technology Resources (for orders that include information technology resources or services in which the contractor will have physical or electronic access to Department information that directly supports the mission of the Department)	SEP 2007
652.242-70	Contracting Officer's Representative (if a COR will be named for the order) Fill-in for paragraph b: "The COR is _____"	AUG 1999
652.242-71	Notice of Shipments (for overseas shipment of supplies)	JUL 1988
652.242-73	Authorization and Performance	AUG 1999
652.243-70	Notices	AUG 1999

The following clause is provided in full text, and is applicable for orders for services that will require contractor employees to perform on-site at a DOS location and/or that require contractor employees to have access to DOS information systems:

652.204-70 Department of State Personal Identification Card Issuance Procedures (MAY 2011)

(a) The Contractor shall comply with the Department of State (DOS) Personal Identification Card Issuance Procedures for all employees performing under this contract who require frequent and continuing access to DOS facilities, or information systems. The Contractor shall insert this clause in all subcontracts when the subcontractor's employees will require frequent and continuing access to DOS facilities, or information systems.

(b) The DOS Personal Identification Card Issuance Procedures may be accessed at http://www.state.gov/m/ds/rls/rpt/c21664.htm .

(End of clause)

SINGLE WOOD DOOR AND STEEL DOOR FRAME SPECIFICATIONS

INDEX

	PAGE NUMBER
1. STEEL FRAME	1
2. WOOD DOOR	3
3. DRAWINGS	5
4. PICTURES	8
5. HARDWARE	10

SINGLE WOOD DOOR AND STEEL DOOR FRAME WBH Ref.6353		
1.0	**STEEL DOOR FRAME**	
1.1	GAUGE:	16 Gauge (1.2mm) Steel.
1.2	MATERIAL:	Cold rolled steel
1.3	FINISH:	Bake prime grey
1.4	FLOOR ANCHOR:	Fixed.
1.5	FABRICATION:	a) Fabricate for knock down field assembly type. b) Knocked down frames: accurately form interlocking joints to maintain alignment of parts when field assembled. c) Hollow metal frames – mortise, reinforce, drill and tap for all mortised hardware, reinforce for all surface – applied hardware. Templates provided by the hardware supplier. Where surface-mounted hardware is to be applied, provide frames with reinforcing plates only. Drilling and tapping for checks, brackets, O.H. holders, etc. by others. d) Provide hardware reinforcing plates of gauges conforming to SD-100 grades specified.
1.6	STRIKE:	1. Mounting height: a) Install strike 40-5/16 inches (1023.94 mm) from bottom frame to center line.

		2. Flat Strike: 2811 ANSI Latchbolt x Deadbolt 3 @ Strike / 2@ Heads of pairs.
1.7	DOOR SILENCERS	Three single silencers GJ 64, equally spaced on strike side. By Glynn Johnson

2.0	**WOOD DOOR:**	
2.1	FINISH WIDTH:	35 5/8" (904.88 mm.)
2.2	FINISH HEIGHT:	83 ¼" (2114.55 mm.)
2.3	FINISH THICKNESS:	1 ¼" (44.45 mm.)
2.4	TRANSPARENT FINISH:	Solid core construction with select white birch species face veneers: premium grade; plain slice with book match. Prefinished at factory.
2.5	FABRICATION:	a) Fabricate doors in accordance with requirements of AWI quality standards. b) Particle core at Non-lab / min. at 45 min and above ½" (12.7 mm) minimum thick edge strips, all edges of wood species to match face veneers. c) All doors to be pre machined for mortise hardware.
2.6	FIRE RATED:	Provide U.L. assemblies.
2.7	BUTT HINGES:	1. Mounting heights: a) Top hinge: from top of hinge to soffit of door head frame: 5 inches (127 mm) b) Bottom hinge: from bottom of hinge to finish floor, 10 inches (254mm) c) Center hinge: equal distance between top and bottom hinges. d) 1.5 Pair butts 450T US26D ½ MS, Wrought steel, polished and plated. By Henry Soss & Company

2.8	LOCKSETS	1. Mounting height: a) Install locksets 40-5/16 inches (1023.94 mm) from finish floor to center line. 2. Locksets: a) 1 Each Lock COR8707 RH X 2812 X 202 US26D X STMS b) 1 Each Lock COR8707 LH X 2812 X 202 US26D X STMS By YALE Security, Inc.
2.9	TRIM DESIGN KNOB:	Copenhagen COR Stainless Steel
2.10	DOME STOPS:	1 Heavy duty cast dome Floor Stop FB 13 type. By Glynn Johnson
2.11	WALL BUMPERS:	1 Each wall stop GJ WB60 x T US26D By Glynn Johnson

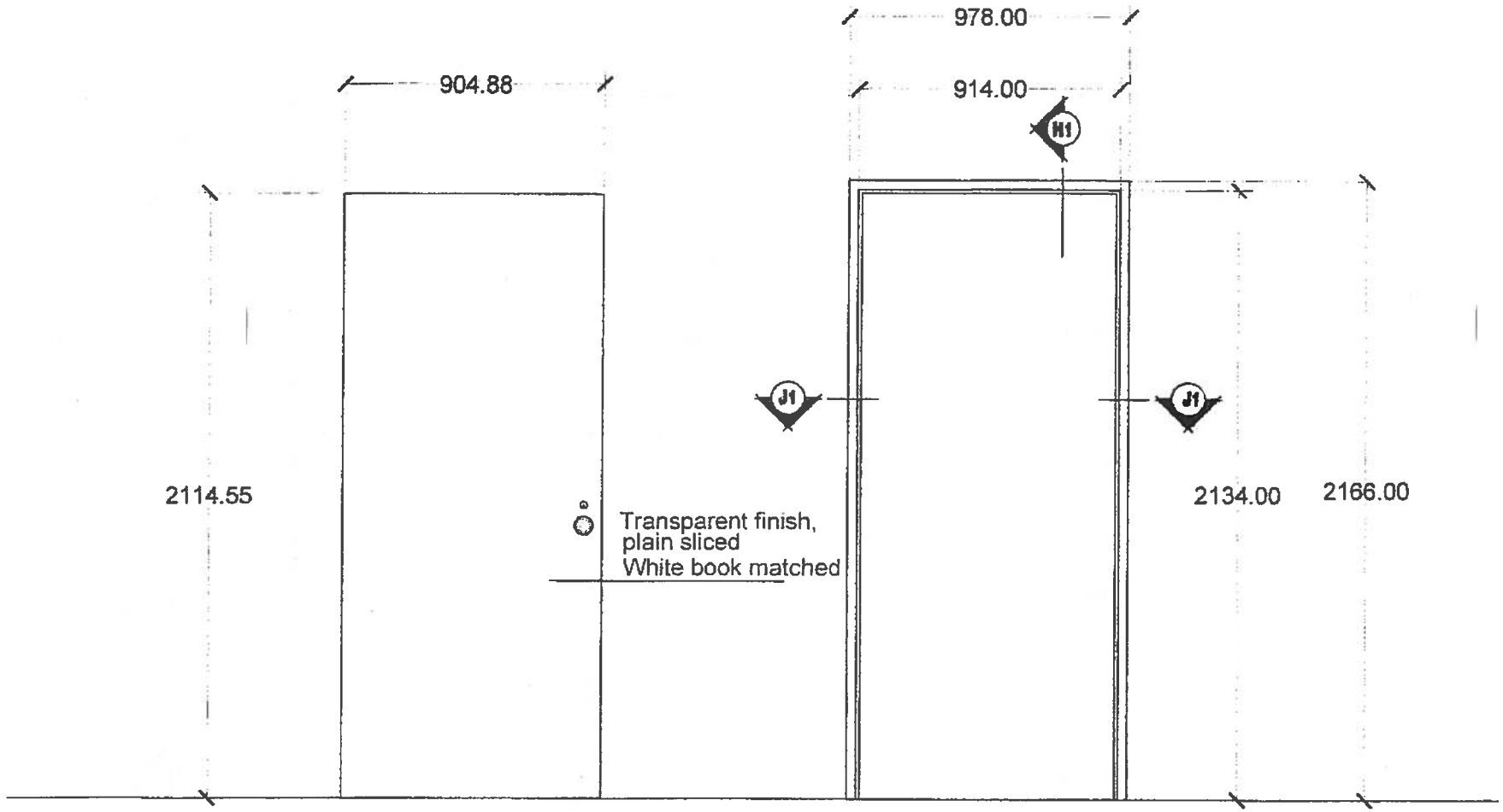

1 **WOOD DOOR**

2 **DOOR FRAME**

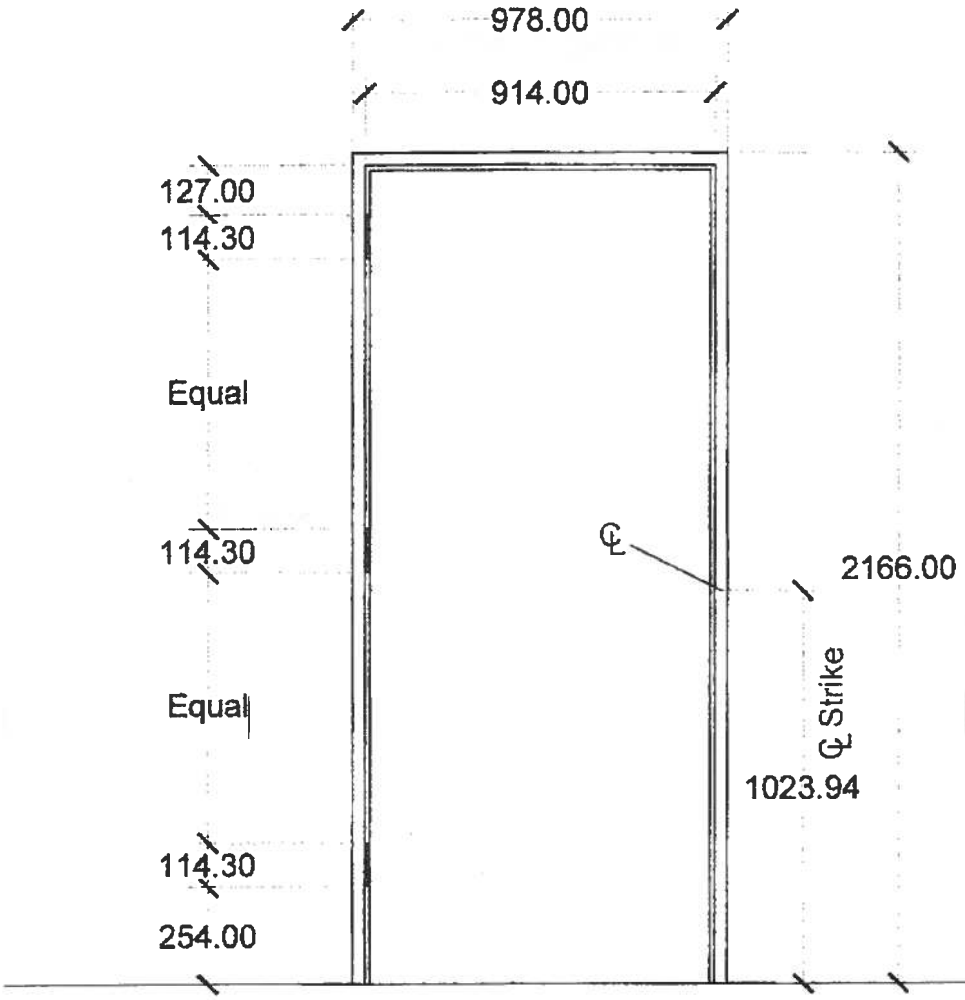

3 **FRAME ELEVATION**

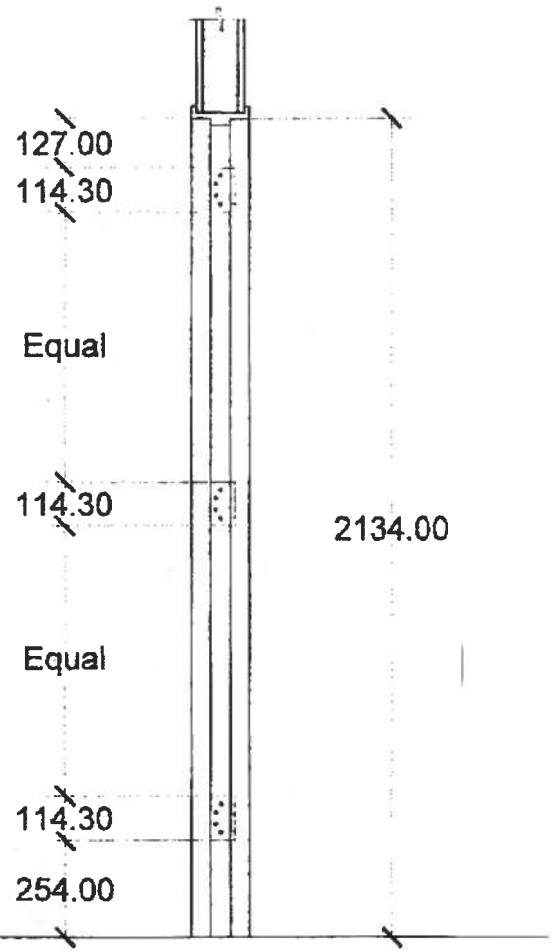

4 **FRAME SECTION**

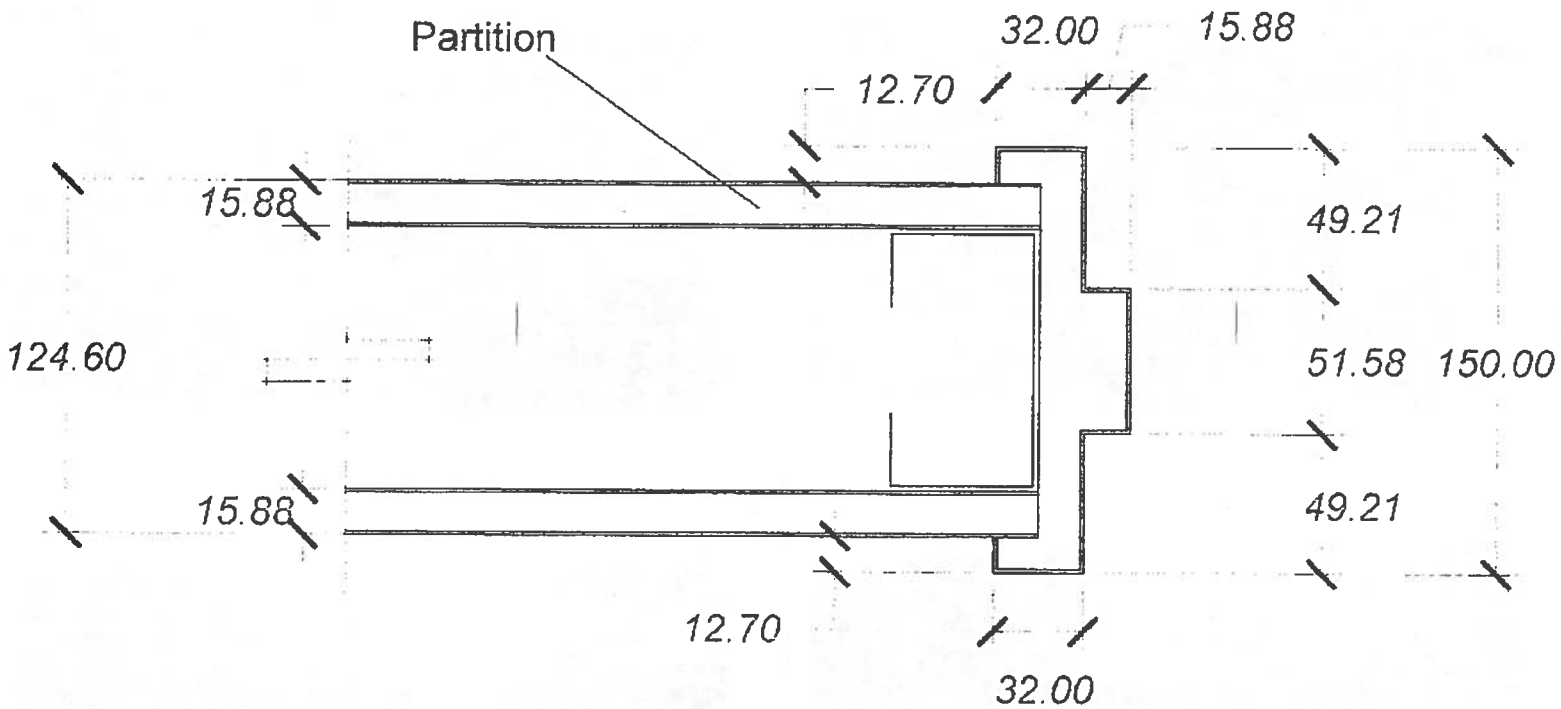

J1 JAMB

H1 HEAD

NOT SCALE

PICTURES	
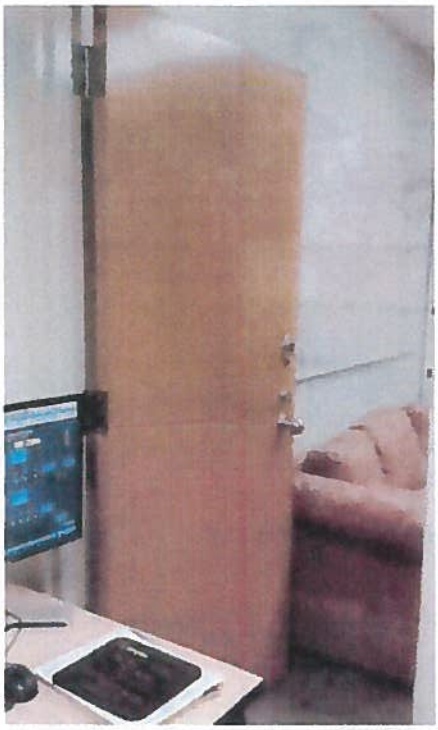 001 White birch veneer wood door.	002 Lockset
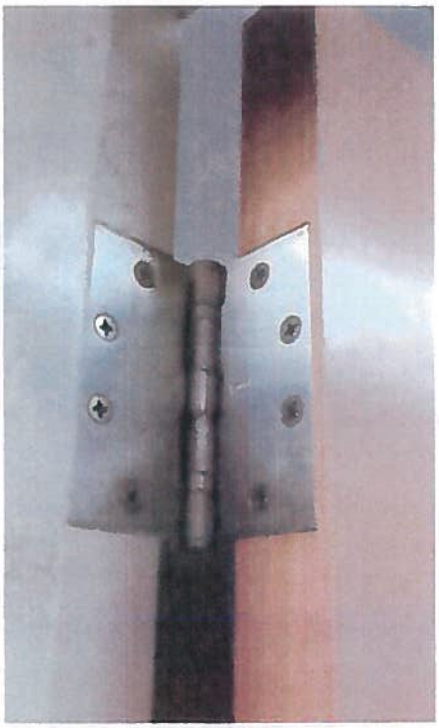 003 Mortise hinges.	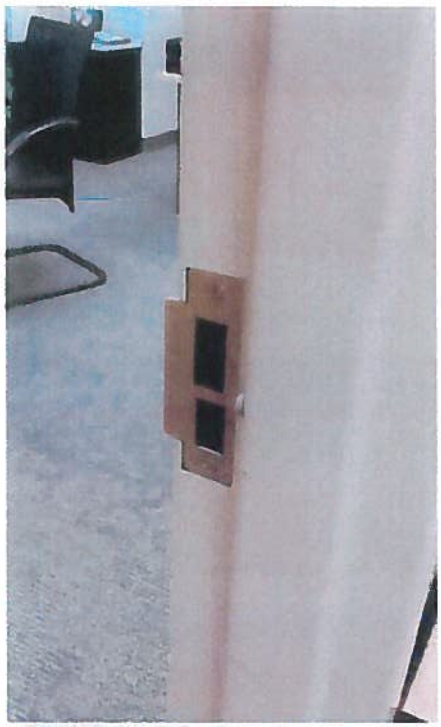 004 Mortise strike.

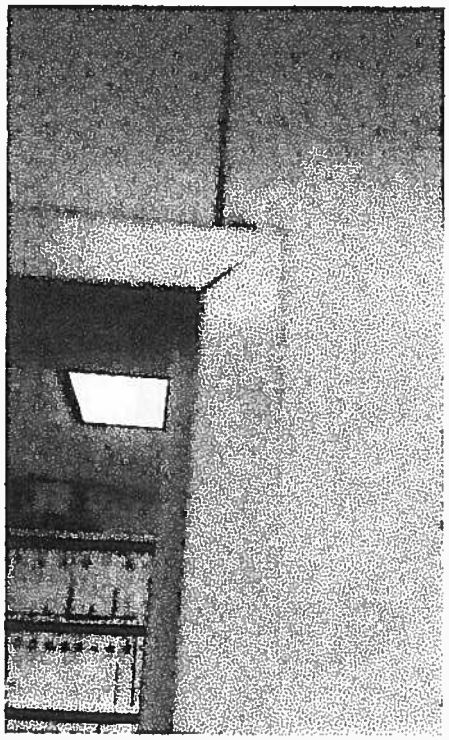

005 Knocked down frame.

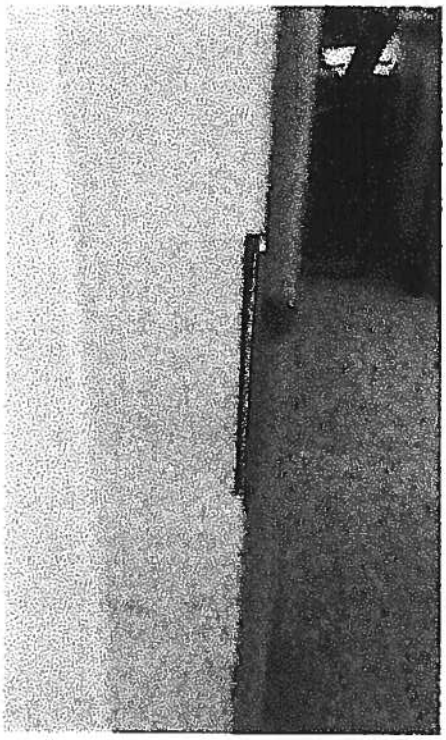

006 Silencers.

Full Mortise Hinges

PLAIN BEARING — STANDARD WEIGHT — TEMPLATE NON-TEMPLATE

WROUGHT STEEL
POLISHED AND PLATED OR
BONDERIZED AND PRIME COATED
GOV'T #2127 or #T2127
ANSI (BHMA) A-8133

WROUGHT BRASS OR BRONZE
POLISHED AND PLATED
GOV'T #2126
ANSI (BHMA) A-2133

WROUGHT STAINLESS STEEL
SATIN FINISH OR HIGHLY POLISHED
ANSI (BHMA) A-5133

PLAIN BEARING
FIVE KNUCKLES
NON-RISING REMOVABLE PINS —
FLAT BUTTON TIPS

AVAILABLE IN HOSPITAL TIP. USE "H" SYMBOL.

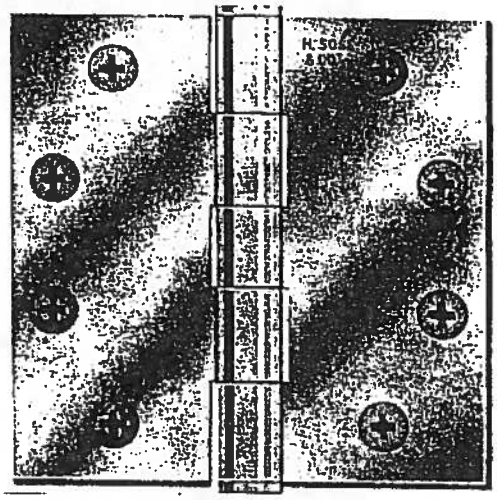

For standard weight doors receiving low frequency service. Non-ferrous hinges are equipped with non-ferrous pins Non-template hinges are furnished with wood screws only. Template hinges are furnished with all machine screws and ½ wood screws.

38

	WROUGHT STEEL		WROUGHT BRASS OR BRONZE		STAINLESS STEEL	
	TEMPLATE	NON-TEMPLATE	TEMPLATE	NON-TEMPLATE	TEMPLATE	NON-TEMPLATE
SIZE	H. SOSS NO.	H. SOSS NO.	H. SOSS NO.	H. SOSS NO.	H. SOSS NO.	H. SOSS NO.
2½x2	250-2 T	250-2	—	—	—	—
2½x2½	250 T	250	X 250 T	X 250	—	—
3x3	300 T	300	X 300 T	X 300	SS 300 T	SS 300
3½x3	350-3 T	350-3	X 350-3 T	X 350-3	SS 350-3 T	SS 350-3
3½x3½	350 T	350	X 350 T	X 350	SS 350 T	SS 350
4x4	400 T	400	X 400 T	X 400	SS 400 T	SS 400
4½x4	450-4 T	450-4	X 450-4 T	X 450-4	SS 450-4 T	SS 450-4
4½x4½	450 T	450	X 450 T	X 450	SS 450 T	SS 450
5x4	500-4 T	500-4	X 500-4 T	X 500-4	SS 500-4 T	SS 500-4
5x4½	500-45 T	500-45	X 500-45 T	X 500-45	SS 500-45 T	SS 500-45
5x5	500 T	500	X 500 T	X 500	SS 500 T	SS 500

	NET WEIGHT PER PAIR AVERAGE (LBS.)			QUANTITY AND SIZE OF SCREWS		
				TEMPLATE		NON-TEMPLATE
SIZE OPEN (INS.)	STEEL	BRASS OR BRONZE	GAUGE OF METAL	FH MACHINE SCREWS	FH WOOD SCREWS	FH WOOD SCREWS
2½x2	0.53	0.60	.089	6—½x8-32	3—¾x8	6—¾x8
2½x2½	0.53	0.60	.089	6—½x8-32	3—¾x8	6—¾x8
3x3	0.75	0.82	.092	6—½x10-24	3—1x10	6—¾x8
3½x3	1.20	1.28	.123	6—½x10-24	3—1x10	6—1x10
3½x3½	1.20	1.28	.123	6—½x10-24	3—1x10	6—1x10
4x4	1.58	1.82	.130	8—½x12-24	4—1¼x12	8—1x10
4½x4	1.90	1.98	.134	8—½x12-24	4—1¼x12	8—1¼x12
4½x4½	2.10	2.26	.134	8—½x12-24	4—1¼x12	8—1¼x12
5x4	2.32	2.52	.146	8—½x12-24	4—1¼x12	10—1¼x12
5x4½	2.57	2.77	.146	8—½x12-24	4—1¼x12	10—1¼x12
5x5	2.72	3.07	.146	8—½x12-24	4—1¼x12	10—1¼x12

Entrance Lock (FO4)

- For office doors where locking is required.
- Deadlocking latchbolt.
- Latchbolt by knob either side, except when outside knob is set by stopwork activator.
- When outside knob is set, latchbolt is operated by key outside and knob inside.

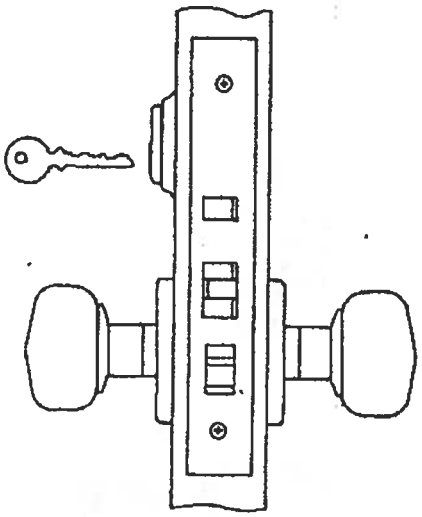

List Numbers		Throw (in.) Latchbolt
Knobs	Levers	
4607	4607FL	5/8
8607	8607FL	5/8
8707	8707FL	3/4

†Cylinder Code: A
Spindles:
Knobs, 5/16" standard, N1174-1/2;
Lever, 3/8" only, 1178L.

Classroom Lock (FO5)

- For classroom, office, or utility room doors.
- Deadlocking latchbolt.
- Latchbolt by knob either side, except when outside knob is set by key outside.
- Inside knob always active.

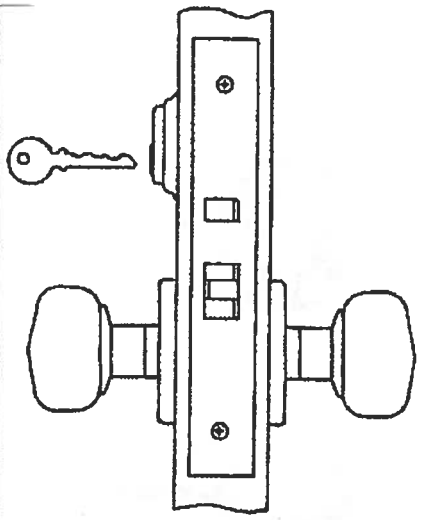

List Numbers		Throw (in.) Latchbolt
Knobs	Levers	
4608	4608FL	5/8
8608	8608FL	5/8
8708	8708FL	3/4

†Cylinder Code: A
Spindles:
Knobs, 5/16" standard, N1174-1/2;
Levers, 3/8" only, 1178L.

Classroom Deadlock

- Deadbolt by key outside, thumbturn inside.
- Thumbturn inside will retract the deadbolt but will not project it.

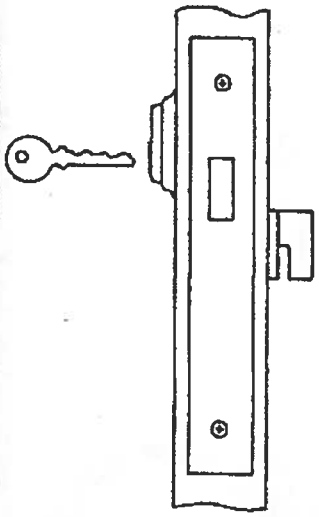

List Number	Throw (in.) Deadbolt
8713ST	1

†Cylinder Code: A
*Lock—handed.

†Cylinder Code defines the cylinder supplied as standard for each lock and the optional cylinder available, see Page 37.

Stopwork Activator

Hotel/Motel Indicator

Thumbturn

Cylinder Thumbturn

Rigid Knob

Trim Design
Knobs

Copenhagen COR

CO Knob: Heavy cold forged, reinforced.
CO Rose: Cold forged, reinforced.
Cylinder Ring: Standard, No. 1765.
Material: Brass, Bronze, Stainless Steel.

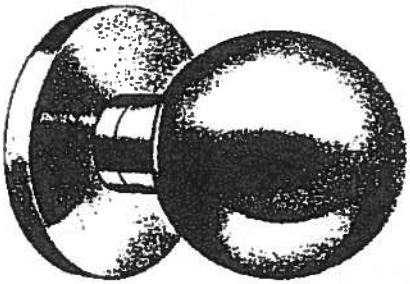

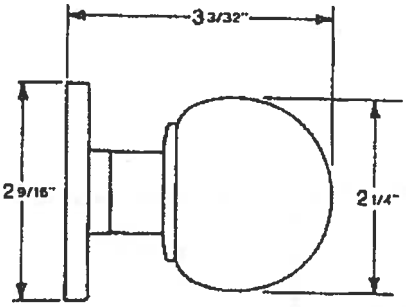

Finlandia FNR

* **FN Knob:** Spherical solid bar stock.
FN Rose: Extra heavy duty cold forged, reinforced.
Cylinder Ring: Standard, No. 1765.
Material: Brass, Bronze, Stainless Steel.

*Knob available knurled.

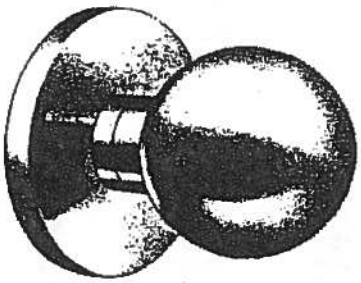

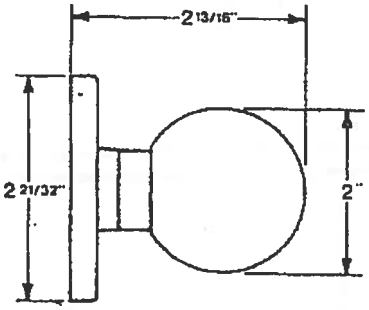

Windsor WN

WN Knob: Heavy cold forged, reinforced.
CO Rose: Cold forged, reinforced.
Cylinder Ring: Standard, No. 1135.
Material: Brass, Bronze, Stainless Steel.

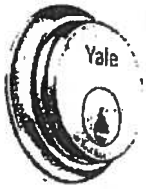

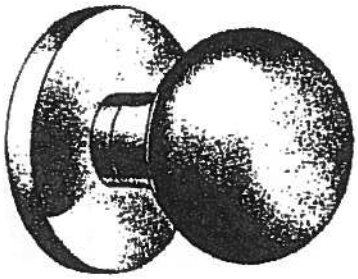

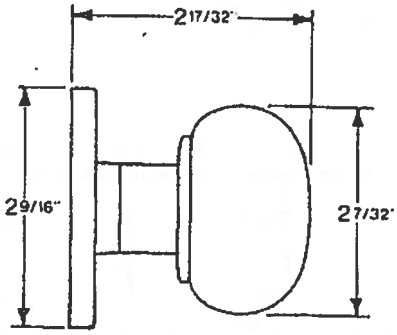

For Standard and Optional Cylinders see Lockset Functions Pages 26 thru 34 and Cylinder Code page 37.

Yale 7000 StyleLine Exit Device Trims are available with the following Knobs and Lever Handles.

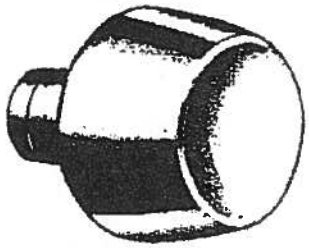

Brandywine BR
Brass, Bronze, Stainless Steel

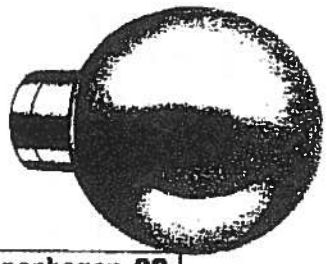

Copenhagen CO
Brass, Bronze, Stainless Steel

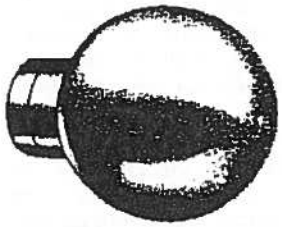

Finlandia FN
Brass, Bronze, Stainless Steel

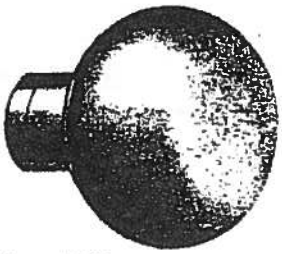

Windsor WN
Brass, Bronze, Stainless Steel

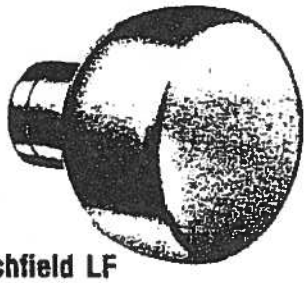

Litchfield LF
Brass, Bronze, Stainless Steel

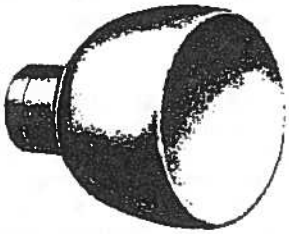

Mystic MY
Brass, Bronze, Stainless Steel

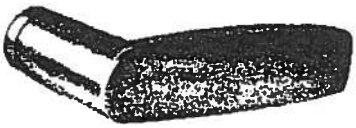

Cotillion CN
Brass, Bronze

Arcadia AR
Brass, Bronze

Jefferson JN
Brass, Bronze, Stainless Steel

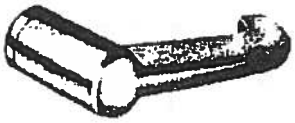

Saxon SA
Brass, Bronze, Stainless Steel

Carmel CR
Brass, Bronze, Stainless Steel

Pinehurst PN
Brass, Bronze, Stainless Steel

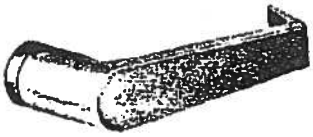

Augusta AU
Brass, Bronze

Monroe MO
Brass, Bronze, Stainless Steel

How to Order:
To order a Knob or Lever Handle prefix the Outside Trim List Number with the Knob or Lever Handle Design Symbol; i.e. CO554 or AU558F.

Each Yale 8700/8600/4600 Series Mortise Locks will be supplied standard with a Flat Strike with a 1-1/8" lip length. The strike supplied will accommodate the locking function, i.e. latchbolt and/or deadbolt and can be installed on doors 1-3/4" thick. These strikes are reversible.

Longer/Shorter Lip Lengths: Mortise Lock Strikes are mounted on the same vertical centerline as the lock. To determine the proper length of lip, measure from the centerline of the strike to the edge of the jamb and add 1/8" for Flat Strikes and 1/4" for Curved Lip Strikes. Select the nearest available length.

Flat Strikes

Standard 2810 ANSI Latchbolt Only Strike: reversible for locks with a latchbolt only. Lip Lengths: 1-1/8" regular; to special order, long, 1-1/4", 1-1/2", 1-3/4", 2", & 2-1/2"; short, 7/8" and 1". Material: Brass, Bronze, Stainless Steel.

Standard 2811 ANSI Latchbolt x Deadbolt Strike: reversible for locks with a latchbolt and a deadbolt. Lip Lengths: 1-1/8" regular; to special order, long, 1-1/4", 1-1/2", 1-3/4", 2" & 2-1/2"; short, 7/8" and 1". Material: Brass, Bronze, Stainless Steel.

Standard 2814 ANSI Deadbolt Only Strike: Supplied standard for 8713ST, 8713ST-2, 8714, 8714-2 and 8715 lock functions. Reversible. Since a deadbolt only function requires no lip, this strike is only available as a 4-7/8" high by 1-1/4" wide rectangle. Material: Brass, Bronze, Stainless Steel.

Curved Lip Strikes

2812 ANSI Latchbolt Only Strike: handed for locks with a latchbolt only. Lip Lengths: 1-1/4" regular; to special order, long, 1-1/2", 1-3/4", 2" & 2-1/4"; short, 1-1/8". Material: Brass, Bronze, Stainless Steel.

2813 ANSI Latchbolt x Deadbolt Strike: handed for locks with a latchbolt and a deadbolt. Lip Lengths: 1-1/4" regular; to special order, long, 1-1/2", 1-3/4", 2" & 2-1/4"; short, 1-1/8". Material: Brass, Bronze, Stainless Steel.

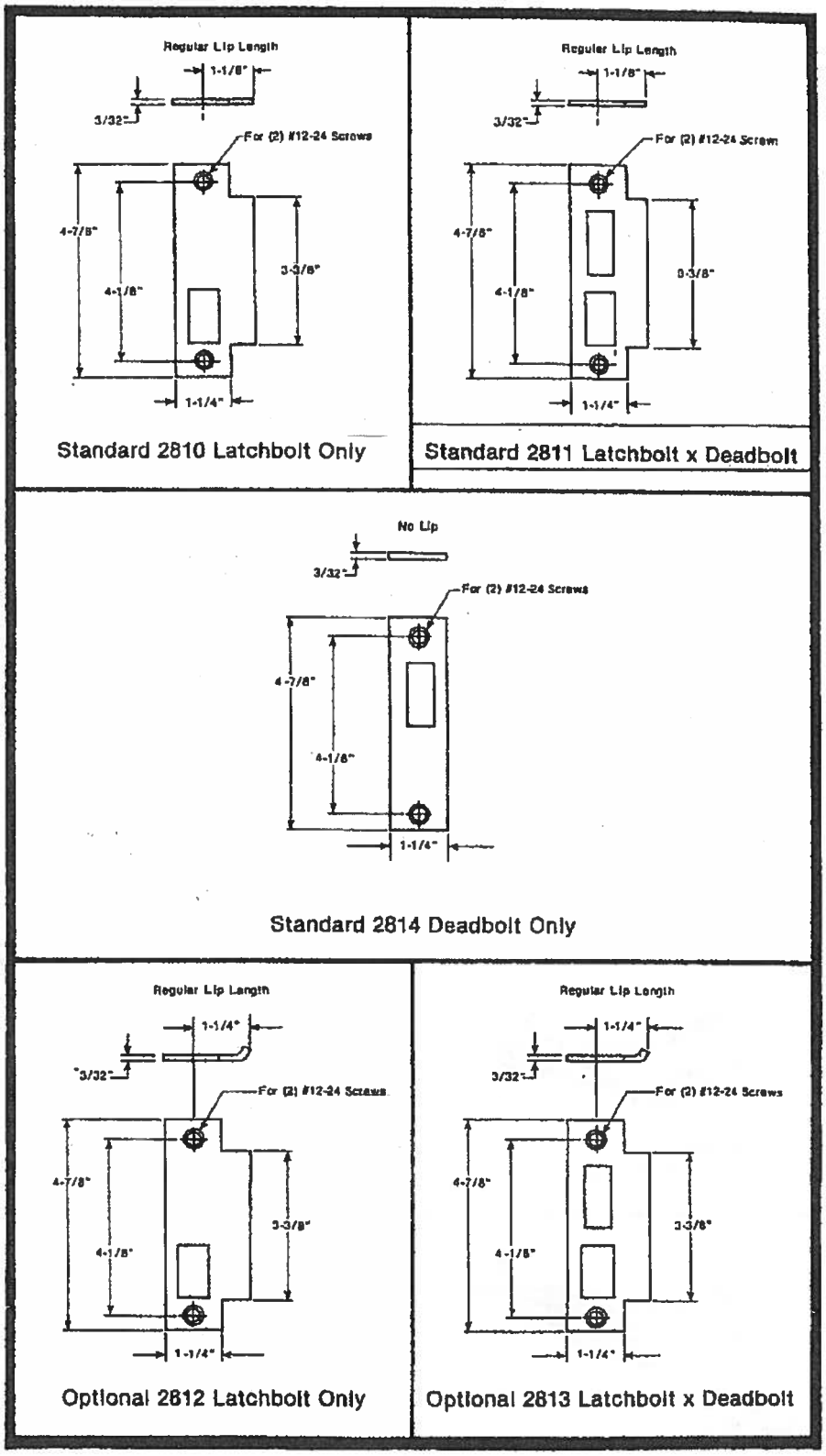

Glynn-Johnson

FB 13/14R DOME STOPS
FB 17 DOME STOPS

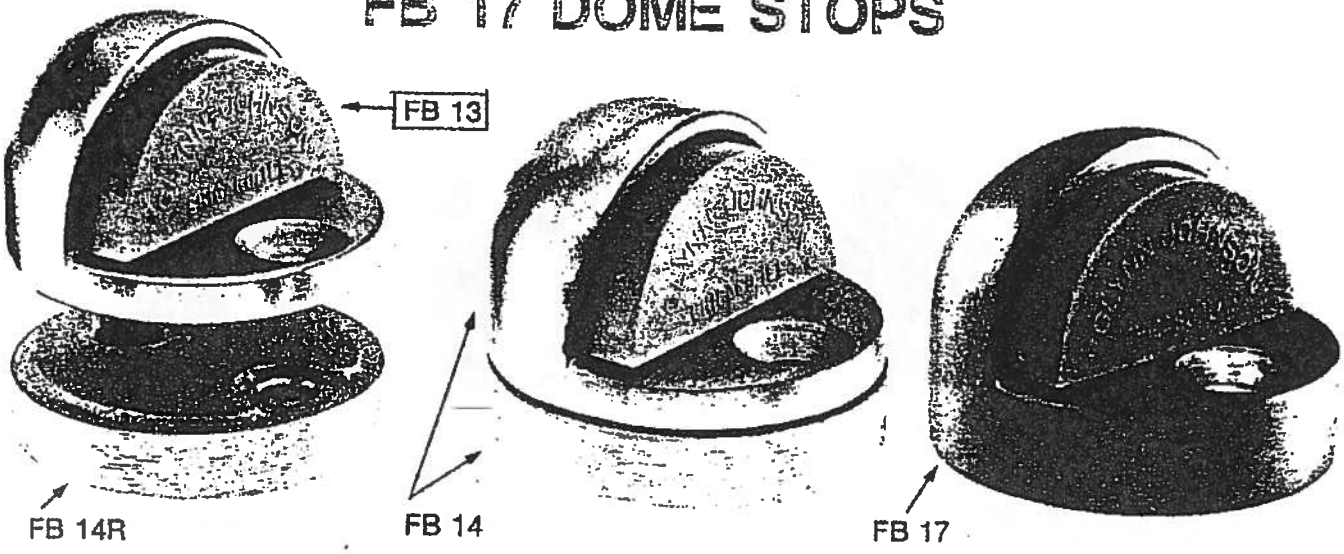

GJ FB13: FED. SPEC. 1330, 1330E; BHMA L12141; ANSI 156.16
GJ FB13/14R, FB17: FED. SPEC. 1330A, 1330AE; BHMA L12161; ANSI 156.16

Glynn-Johnson Heavy Duty Cast Dome Stops are constructed of brass, bronze or aluminum. Unique Glynn-Johnson riser design allows easy conversion of standard FB-13 (1" high overall) to FB-14 (1⅜" high overall) thereby reducing inventory costs as well as eliminating confusion on the job site. Standard FB-13 is used where no threshold is used, while FB14R riser adapts unit for use where a threshold is used. Attractive gray rubber cushion, while tamper-proof, can be easily replaced when worn out.
Where carpet is used, SK-771 carpet riser is recommended, height as required.

Units are packed with fasteners sufficient for mounting in all types of floor construction, including concrete. Available in a complete range of finishes, including US3, 4, 9, 10, 10B, 26, 26D, and aluminum.

SCREW DETAILS
1 - #14 x 1½" flat head wood screw
1 - plastic expansion shield

NEW!

Glynn-Johnson now offers a one piece dome stop for use with thresholds. Incorporating the features and construction of the FB-13, the FB-17 unit allows for even more flexibility. FB-17 dome stops are available in US3, 4, 9, 10, 10B, 26 and 26D finishes.

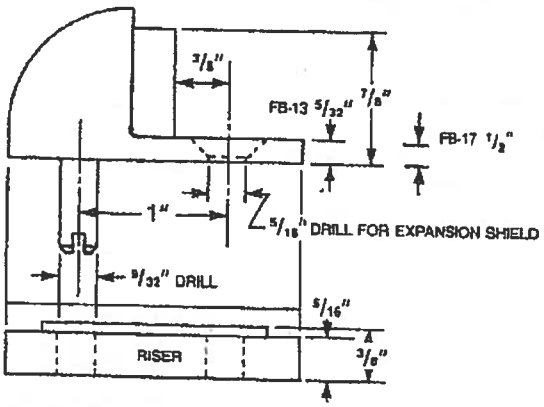

Glynn-Johnson
4422 N. Ravenswood Ave.
Chicago, IL 60640 • 312/878-5500
FAX NO. (312) 878-8968

In Canada: Ingersoll-Rand Door Hardware
Port Credit P.O. Box 100
Mississauga, Ontario L5G 4L5
Tel (416) 278-6128 • Fax (416) 278-1413

A1

©1989
Printed in U.S.A.

Glynn-Johnson

WALL BUMPERS

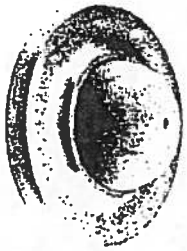

50C

60C

50W

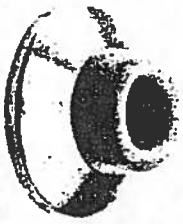

60W

GJ 50C, 60C: FED. SPEC. 1327, 1327T; BHMA L12101; ANSI 156.16

Glynn-Johnson 50C and 60C Wall Bumpers feature heavy-duty cast brass, bronze or aluminum base. Units also feature concealed tamper-proof mounting and are provided standard with fasteners adequate for mounting in all types of wall construction, including concrete. Units are shipped factory preassembled to reduce installation cost. Both 50C and 60C have a 2½" diameter base with 1" overall projection. The 50C unit is designed with a convex rubber bumper while the 60C unit has a concave bumper which avoids damage to locks with projecting buttons. Both models available in aluminum, US3, 4, 9, 10, 10B, 26, and 26D finishes.

SCREW DETAILS:
1 - #10 x 1½" truss head dual purpose screw
1 - toggler
1 - plastic expansion shield

GJ 50W, 60W: BHMA L22102; ANSI 156.16

Glynn-Johnson 50W and 60W feature sturdy yet economical wrought base of aluminum, brass, bronze, or stainless steel construction. Both models feature concealed tamper-proof mounting and are provided standard with fasteners adequate for mounting in all types of wall construction, including concrete. Backplate is furnished with projecting prongs to prevent movement after unit is installed. Units are shipped factory preassembled to reduce installation cost. Base of units measure 2⅜" diameter with a 1" overall projection. The 50W unit has a convex rubber bumper while the 60W unit features a concave rubber, which avoids damage to locks with projecting buttons. Both versions available in aluminum, US3, 4, 9, 10, 10B and durable stainless steel US32 and US32D finishes.

SCREW DETAILS:
1 - #10 x 1½" truss head dual purpose screw
1 - toggler
1 - plastic expansion shield

Note: Expansion shield is adequate for most types of wall construction, including brick, block, and concrete. The toggler is recommended for use in dry wall construction.

Note: Replacement rubber bumpers are available for both cast and wrought models.

Glynn-Johnson
4422 N. Ravenswood Ave.
Chicago, IL 60640 • 312/878-5500
FAX NO. (312) 878-8968

In Canada: Ingersoll-Rand Door Hardware
Port Credit P.O. Box 100
Mississauga, Ontario L5G 4L5
Tel (416) 278-6128 • Fax (416) 278-1413

©1989
Printed in U.S.A.

Glynn-Johnson

DOOR SILENCERS

METAL FRAMES

GJ 64: FED. SPEC. 1337A; BHMA L03011; ANSI 156.16

Glynn-Johnson 64 Door Silencers, for use on metal frames featuring pneumatic design that, once installed, forms an air pocket to absorb shock and reduce noise of door closing. A necessity where silence is critical, these silencers are tamper-proof once installed on the frame. Proper installation also eliminates door rattle and provides constant tension for door latches or locks. Units furnished in complementary gray color, packed in bags of 100 or bulk packed.

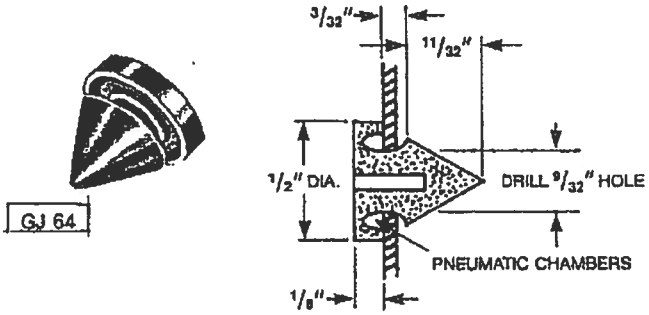

Glynn-Johnson 64R, while incorporating all features of the 64, is furnished with a round stem, a more practical installation where a blade type stop strip is used.

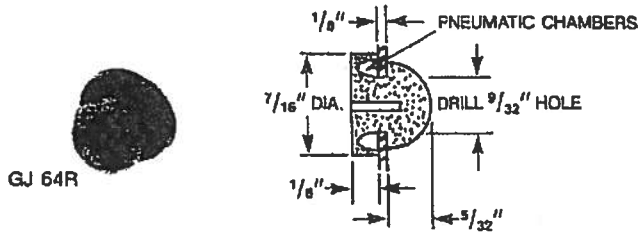

Glynn-Johnson 64-1 also incorporates all features of the 64, but is furnished with a projection of ¼", rather than the standard ⅛".

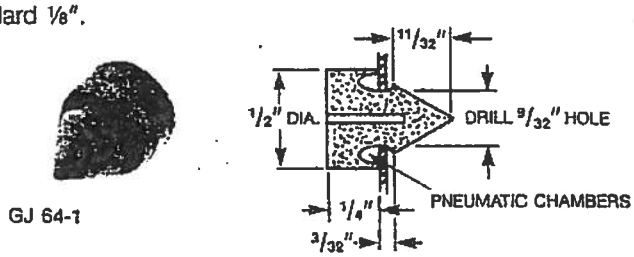

WOOD FRAMES

GJ 65: FED. SPEC. 1337B; BHMA L03021; ANSI 156.16

Glynn-Johnson 65 Silencers, for use on wood frames, also feature pneumatic design to cushion shock and absorb noise. To prevent removal, a small brad should be driven into stop strip and through stem of silencer, as shown in the detail. Units furnished in complementary gray color, packed in bags of 100 or bulk packed.

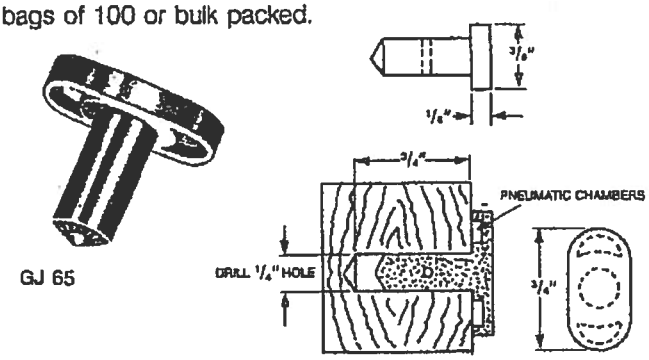

WOOD OR METAL FRAMES

Glynn-Johnson 66 Self Adhesive Rubber Silencers can be utilized on wood or metal frames. Economical installation requires no drilling of frames. Units available in attractive brown, gray, or white colors.

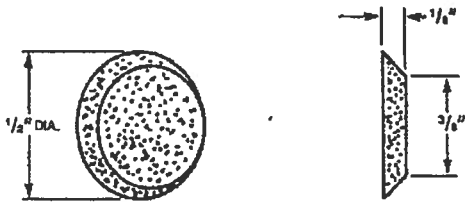

GJ 66

Proper installation of all silencers requires 1/16" clearance between door and stop strip (1/8" when door closers are used).

Glynn-Johnson
4422 N. Ravenswood Ave.
Chicago, IL 60640 • 312/878-5500
FAX NO. (312) 878-8968

In Canada: Ingersoll-Rand Door Hardware
Port Credit P.O. Box 100
Mississauga, Ontario L5G 4L5
Tel (416) 278-6128 • Fax (416) 278-1413

©19
Printed in U.S.