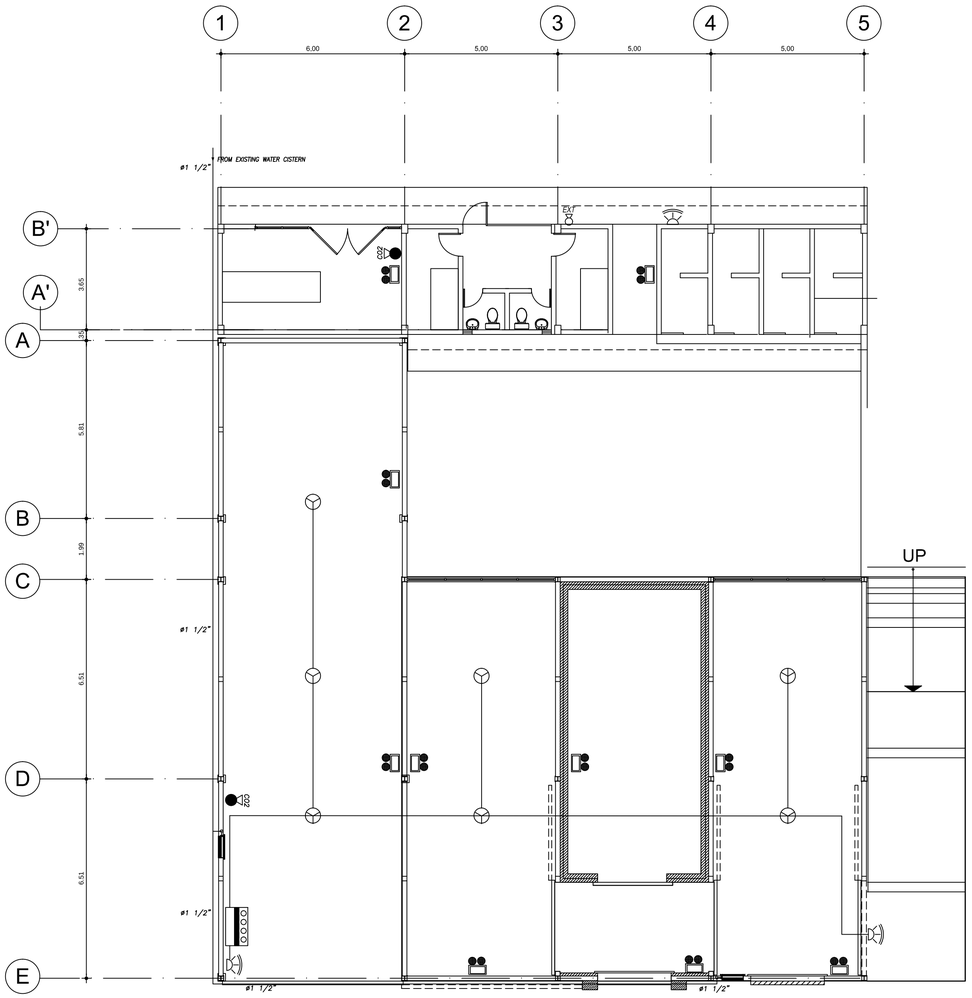

FIRE PROTECTION SYSTEM PLAN VIEW

SCALE:_____1:100

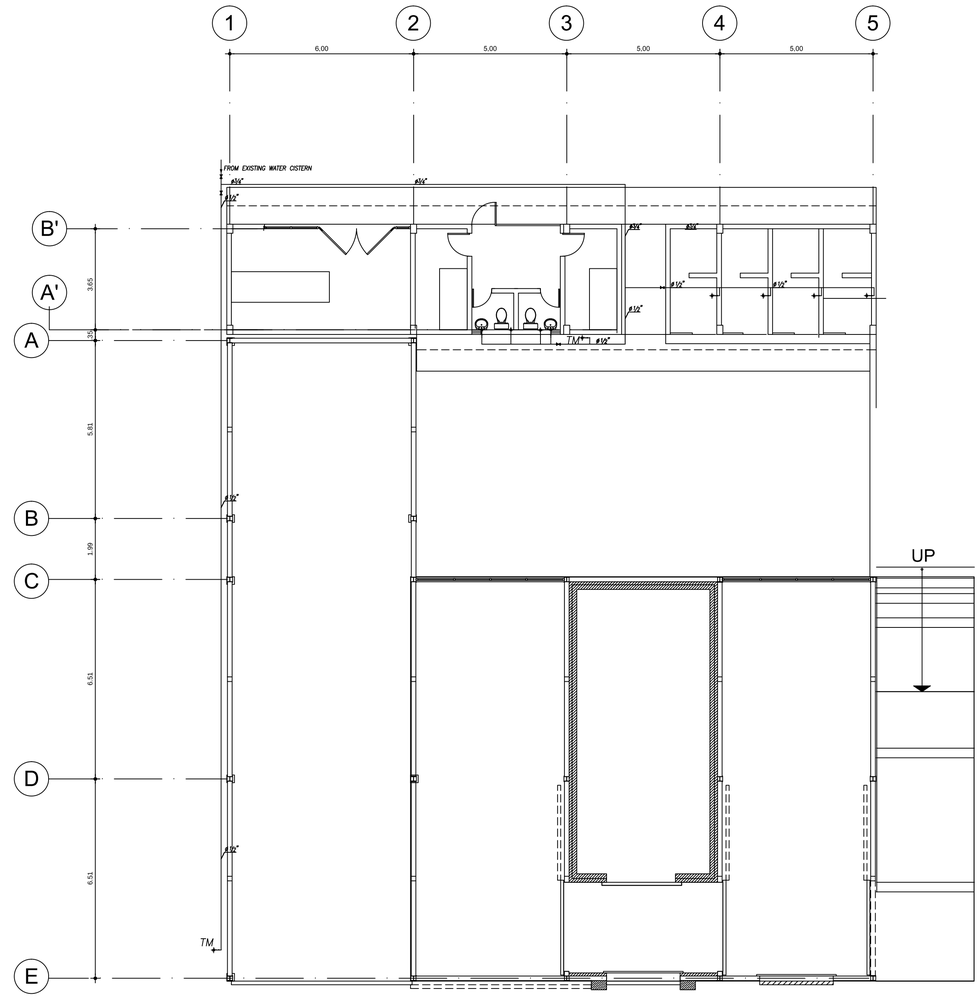

WATER SYSTEM PLAN VIEW

SCALE:_____1:100

FIRE PROTECTION SYSTEM SYMBOLS	
SYMBOL	DESCRIPTION
	ALARM SIREN
	THERMAL DETECTOR
	1/2" PVC PIPE WITH CONNECTOR
	EMERGENCY LIGHT 120 VOLTS
	FIRE ALARM CENTRAL PANEL
EXT	ABC FIRE EXTINGUISHER (5 Kg)
CO2	CO2 FIRE EXTINGUISHER (9 Kg)
	FIRE HOSE CABINET
	1 1/2" GALVANIZED PIPE FOR WATER

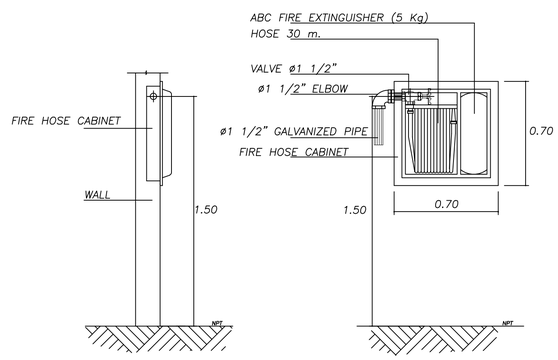

FIRE HOSE CABINET DETAIL

SCALE : N/S

WATER SYSTEM SYMBOLS	
SYMBOL	DESCRIPTION
	PVC PIPE
	WATER OUTLET
TM	HOSE OUTLET
	WATER VALVE

NARCOTICS AFFAIRS OFFICE - COSTA RICA

SECONDARY INSPECTION SITE FOR KM35 – COSTA RICA POLICE

DESCRIPTION:
FIRE PROTECTION SYSTEM – PLAN VIEW
WATER SYSTEM – PLAN VIEW

UNITS: METERS
VERSION: 01
CODE: 0001
DATE: FEBRUARY– 2013
DRAWN BY: MARIO NARVAEZ

SCALE: LISTED
ACAD FILE: DWG
SECOND INSPECT ARCH.dwg
SHEET #: S-2
TOTAL SHEETS: 3

PROJECT COORDINATOR: MARIO NARVAEZ, NAS ENGINEER
NAO ACCEPTANCE: MARCELYN SANCHEZ, NARCOTICS AFFAIRS OFFICE
ACCEPTED BY: POLICE REPRESENTATIVE NAME, POLICE REPRESENTATIVE
PROFESSIONAL RESPONSIBLE: CONTRACTOR NAME, CONSTRUCTION RESPONSIBLE

LOCAL AUTHORITIES APPROVALS: