METALLIC FRAME TYPE 1 (5 UNITS)
AXIS 1-2-3-4-5

SCALE: 1:50

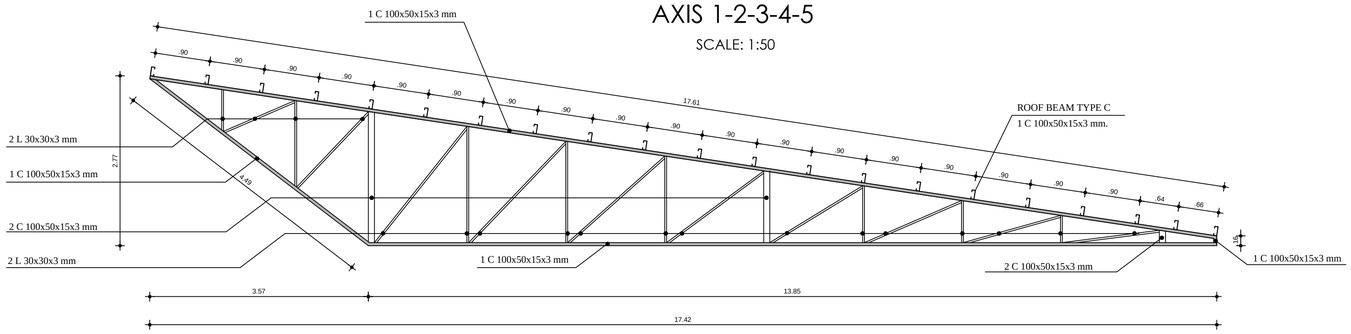

METALLIC FRAME TYPE 2 (2 UNITS)
AXIS 1-2

SCALE: 1:50

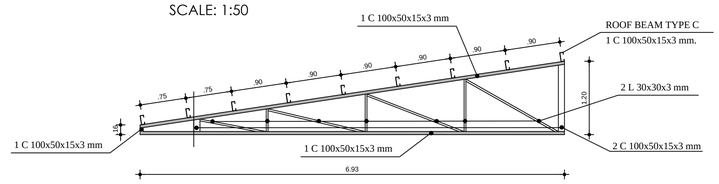

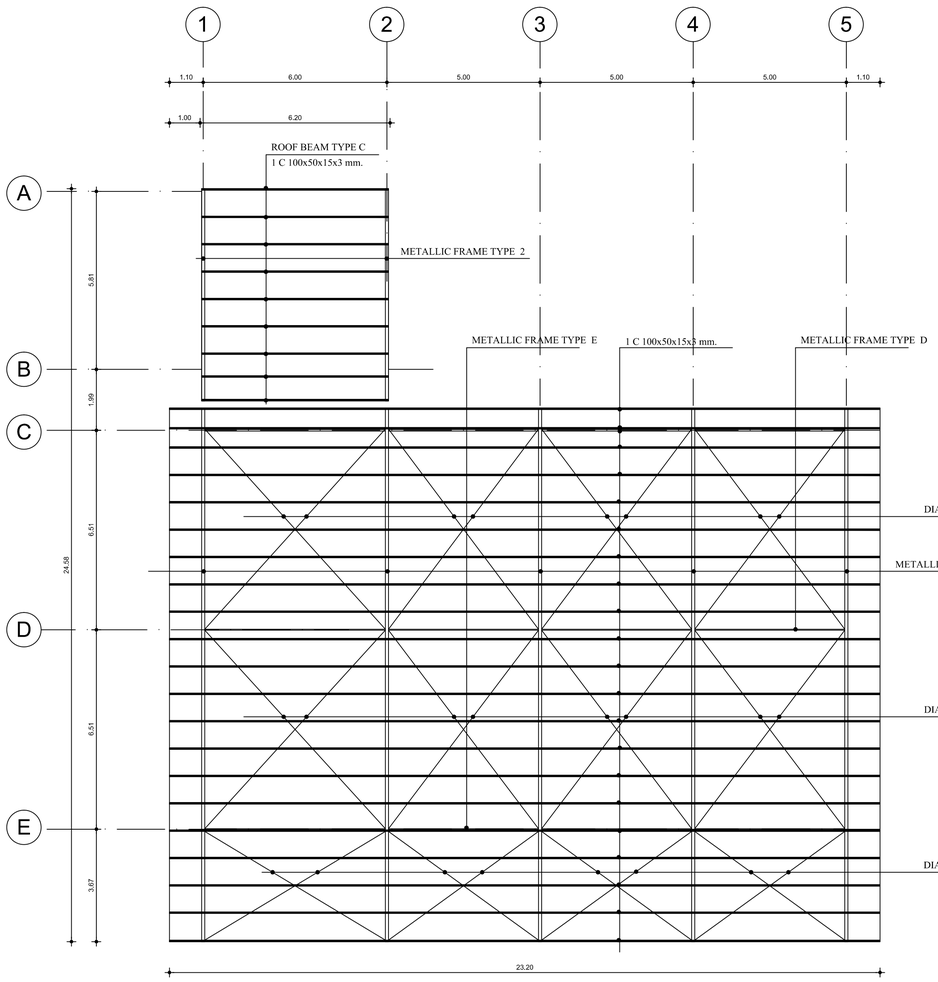

ROOF PLAN

SCALE:_____1:100

GUTTER'S DETAIL

SCALE:_____1:20

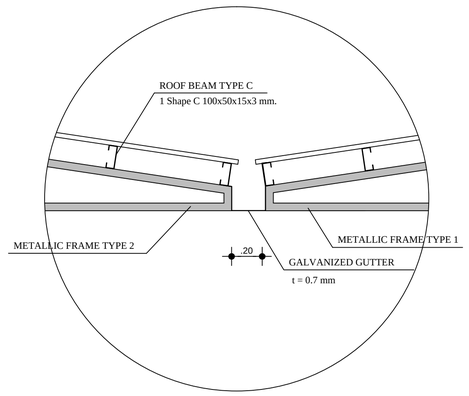

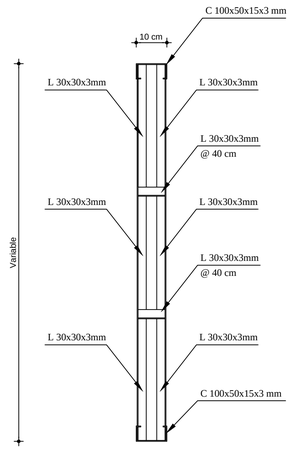

TYPICAL SECTION
FRAMES TYPE 1 & 2

SCALE:_____1:10

STRUCTURAL STEEL SUMMARY

SHAPE	TOTAL LENGTH	WEIGHT (Kg/m)	TOTAL WEIGHT
METALLIC FRAME TYPE 1			
L30X30X3	65.1	1.360	88.54
C100x50x15x3	43.61	5.075	221.32
TOTAL WEIGHT PER FRAME (KG)			309.86
NUMBER OF FRAMES			5.00
TOTAL WEIGHT (KG)			**1,549.28**
METALLIC FRAME TYPE D			
C100x50x15x3	62.35	5.075	316.43
TOTAL WEIGHT PER FRAME (KG)			316.43
NUMBER OF FRAMES			1.00
TOTAL WEIGHT (KG)			**316.43**
METALLIC FRAME TYPE A			
C100x50x15x3	17.8	5.075	90.34
TOTAL WEIGHT PER FRAME (KG)			90.34
NUMBER OF FRAMES			1.00
TOTAL WEIGHT (KG)			**90.34**
ROOF BEAMS & BEAM AXIS C			
C100x50x15x3	563.6	5.075	2,860.27
TOTAL WEIGHT FOR ROOF BEAMS (KG)			**2,860.27**

SHAPE	TOTAL LENGTH	WEIGHT (Kg/m)	TOTAL WEIGHT
METALLIC FRAME TYPE 2			
L30X30X3	19.52	1.360	26.55
C100x50x15x3	17.34	5.075	88.00
TOTAL WEIGHT PER FRAME (KG)			114.55
NUMBER OF FRAMES			2.00
TOTAL WEIGHT (KG)			**229.10**
METALLIC FRAME TYPE E			
L30X30X3	319.18	1.360	434.08
TOTAL WEIGHT PER FRAME (KG)			434.08
NUMBER OF FRAMES			1.00
TOTAL WEIGHT (KG)			**434.08**
METALLIC FRAME TYPE B			
C100x50x15x3	13.25	5.075	67.24
TOTAL WEIGHT PER FRAME (KG)			67.24
NUMBER OF FRAMES			1.00
TOTAL WEIGHT (KG)			**67.24**
METALLIC COLUMNS			
WF 6X6X15	82.3	22.500	1,851.75
PLATE 75x12 mm	1.8	7.065	8.87
TOTAL WEIGHT FOR COLUMNS (KG)			**1,860.62**
STRUCTURAL STEEL TOTAL WEIGTH			**7,407.35**

NARCOTICS AFFAIRS OFFICE - COSTA RICA

SECONDARY INSPECTION SITE FOR THE KM35 – COSTA RICA POLICE

DESCRIPTION: INSPECTION BLOCK METALLIC DETALS STRUCTURE FOR ROOF

UNITS: METERS
VERSION: 01
CODE: 0001
DATE: FEBRUARY– 2013
DRAWN BY: MARIO NARVAEZ
SCALE: LISTED
ACAD FILE: DWG SECOND INSPECT ARCH.dwg
SHEET #: E1-2
TOTAL SHEETS: 4

PROJECT COORDINATOR: MARIO NARVAEZ, NAS ENGINEER
NAD ACCEPTANCE: MARCELYN SANCHEZ, NARCOTICS AFFAIRS OFFICE
ACCEPTED BY: POLICE REPRESENTATIVE NAME, POLICE REPRESENTATIVE
PROFESSIONAL RESPONSIBLE: CONTRACTOR NAME, CONSTRUCTION RESPONSIBLE

LOCAL AUTHORITIES APPROVALS: