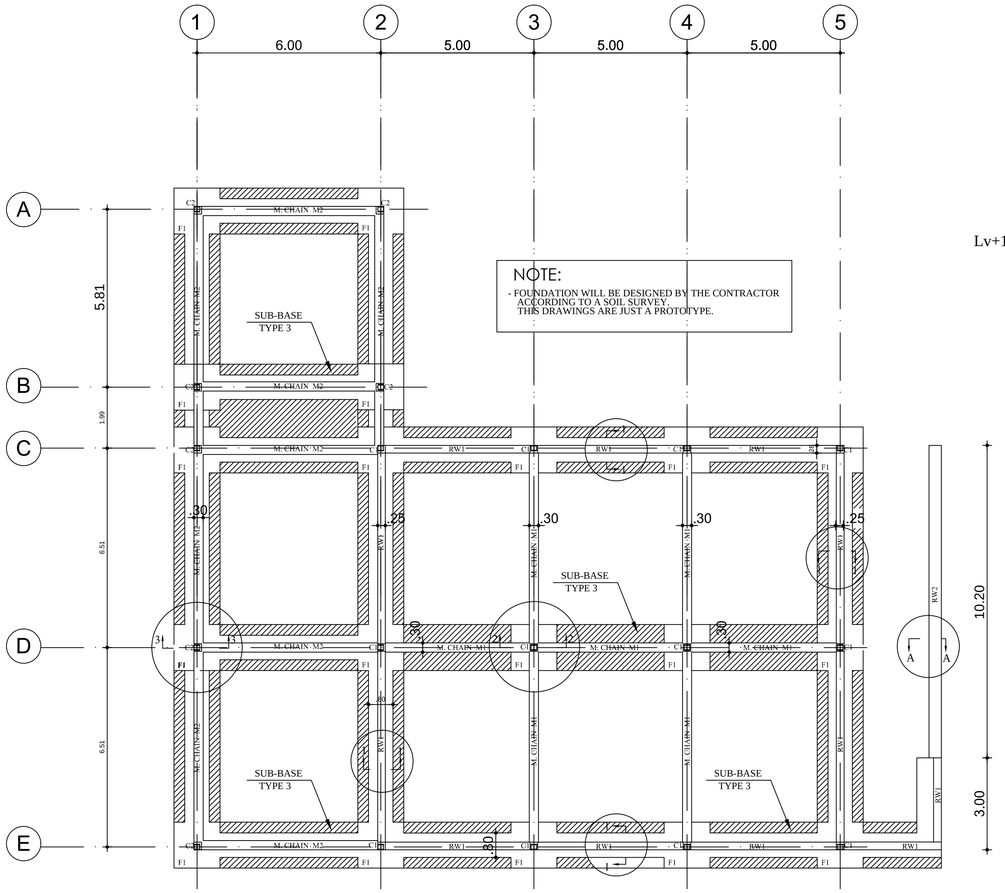

NOTE:

- FOUNDATION WILL BE DESIGNED BY THE CONTRACTOR ACCORDING TO A SOIL SURVEY. THIS DRAWINGS ARE JUST A PROTOTYPE.

FOUNDATIONS PLAN

SCALE: 1_____100

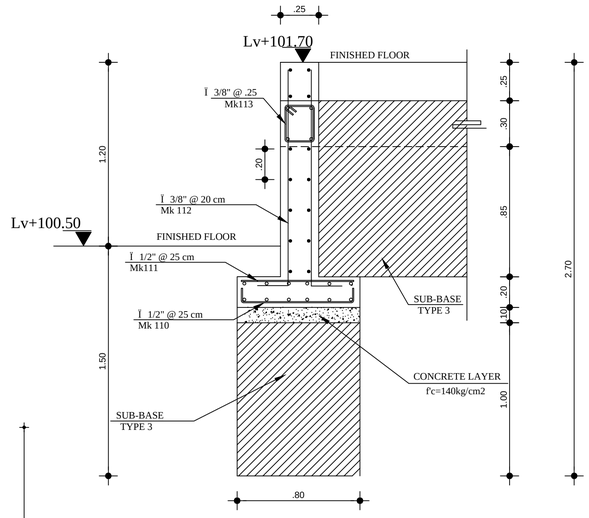

SECTION 1-1
RETAINING WALL TYPE RW1

ESC: 1:20

- 16Ī 1/2" Mk114 / Mk115 /Mk 116
- 14Ī 3/8" Mk117 / Mk118 / Mk 119

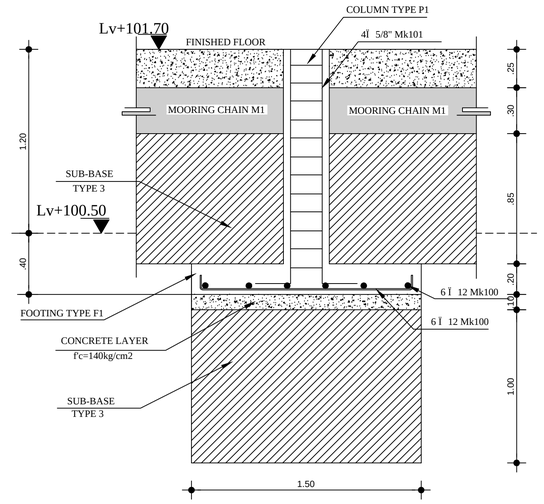

SECTION 2-2

SCALE: 1:20

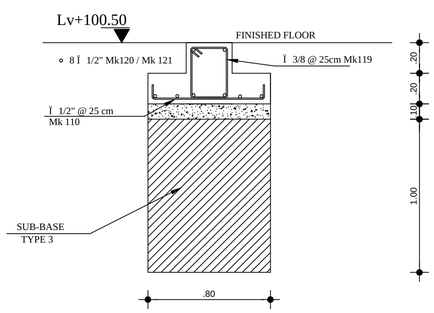

MOORING CHAIN M2

SCALE: 1:20

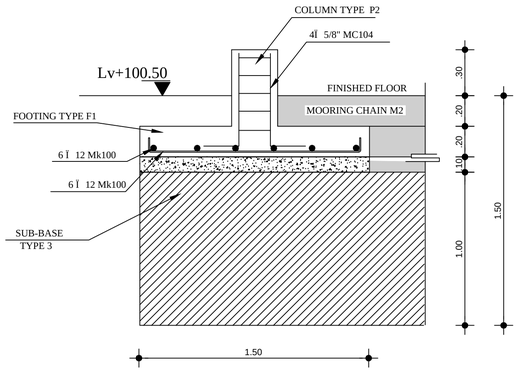

SECTION 3-3

SCALE: 1:20

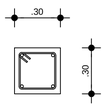

- 4Ī 1/2" Mk 122 / Mk123

STIRRUPS Ī 3/8" @ 25cm Mk124

MOORING CHAIN M1

SCALE: 1 - 20

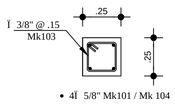

- 4Ī 5/8" Mk101 / Mk 104

COLUMNS' SECTION
TYPE P1 - TYPE P2

SCALE: 1 - 20

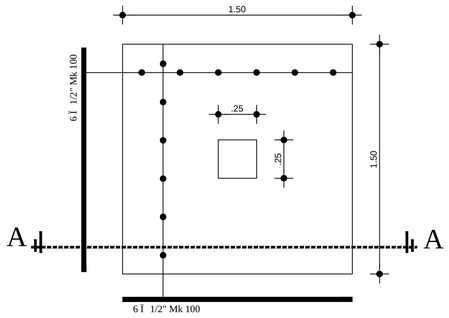

FOOTING TYPE F1

SCALE: 1 - 20

REINFORCEMENT SCHEDULE

Mk	TYPE	DIAM (inches)	NUM	DIMENSIONS (m) a	b	c	g	TOTAL LENGTH	REBAR NUMBER	NOTES
FOUNDATIONS, CHAINS & COLUMNS										
100	I	1/2	228	1.40				1.40	29	
101	L	5/8	72	1.55	0.30			1.85	12	
103	O	3/8	167	0.20	0.20		0.08	0.96	14	
104	L	5/8	42	0.65	0.30			0.95	4	
110	C	1/2	454	0.75	0.15			1.05	40	Take leftover from MC115 & 123
111	I	1/2	243	0.75				0.75	16	
112	L	3/8	590	1.55	0.30			1.85	99	
113	O	3/8	243	0.20	0.30		0.08	1.16	22	
114	I	1/2	64	12.00				12.00	64	
115	I	1/2	32	3.50				3.50	11	Leftover 11 rebar of 1.5 m & 1 of 8.5m
116	I	1/2	32	1.50				1.50	4	
117	I	3/8	56	12.00				12.00	56	
118	I	3/8	28	3.50				3.50	9	Leftover 9 rebar of 1.5 m
119	I	3/8	28	1.50				1.50	2	Take leftover from MC118 & 124
120	I	1/2	42	6.00				6.00	21	
121	I	1/2	12	5.75				5.75	6	
122	I	1/2	12	5.00				5.00	0	Take leftover from M123
123	I	1/2	16	6.45				6.45	16	Leftover 1 rebar of 5.55 m
124	C	3/8	164	0.25	0.25		0.08	1.16	17	Leftover 1 rebar of 5.04 m

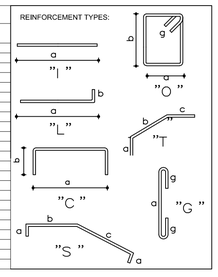

STEEL SCHEDULE SUMMARY

DIAMETER	3/8	1/2	5/8	3/4	7/8
REBAR NUMBER	228	204	16	0	0
WEIGHT/REBAR	6.720	11.928	18.624	26.820	36.504
TOTAL	2,052.61	2,433.31	297.98	0.00	0.00
STEEL SUMMARY KG					4,783.90

NOTE:

- THE STRUCTURAL DESIGN SHALL BE VERIFIED BY THE CONTRACTOR.
- ANY RECTIFICATION SHALL BE DONE THROUGH A CONTRACTUAL MODIFICATION APPROVED BY THE CONTRACTING OFFICER

TECHNICAL SPECIFICATIONS

OVERLAPS = 40 Ø REBAR (MIN)
REINFORCEMENT : fy = 4.200kg/cm2
CONCRETE: f'c = 210kg/cm2

Gs = 5 Tn/m2 (Soil reference
COATINGS: FOOTING: 5CM
OTHERS: 2CM

RETAINING WALL RW2

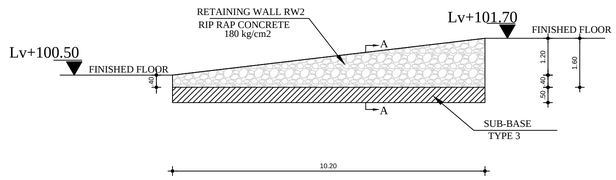

FRONTAL VIEW

SCALE: 1:100

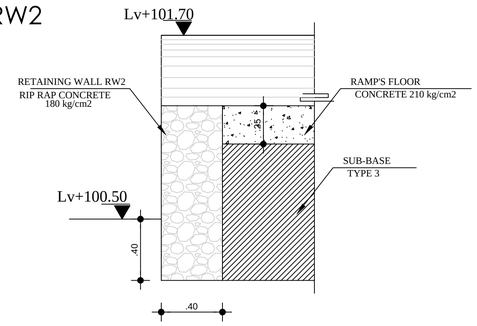

SECTION A-A

SCALE: 1:20

NARCOTICS AFFAIRS OFFICE - COSTA RICA

SECONDARY INSPECTION SITE FOR THE
KM35 – COSTA RICA POLICE

DESCRIPTION: INSPECTION BLOCK, FOUNDATIONS DETAILS, COLUMNS DETAILS

UNITS: METERS | VERSION: 01
CODE: 0001
DATE: FEBRUARY – 2013
DRAWN BY: MARIO NARVAEZ

SCALE: LISTED
ACAD FILE: DWG
SECOND INSPECT ARCH.dwg
SHEET #: E1-1
TOTAL SHEETS: 4

PROJECT COORDINATOR: MARIO NARVAEZ, NAS ENGINEER
NAO ACCEPTANCE: MARCELYN SANCHEZ, NARCOTICS AFFAIRS OFFICE
ACCEPTED BY: POLICE REPRESENTATIVE NAME, POLICE REPRESENTATIVE
PROFESSIONAL RESPONSIBLE: CONTRACTOR NAME, CONSTRUCTION RESPONSIBLE

LOCAL AUTHORITIES APPROVALS: