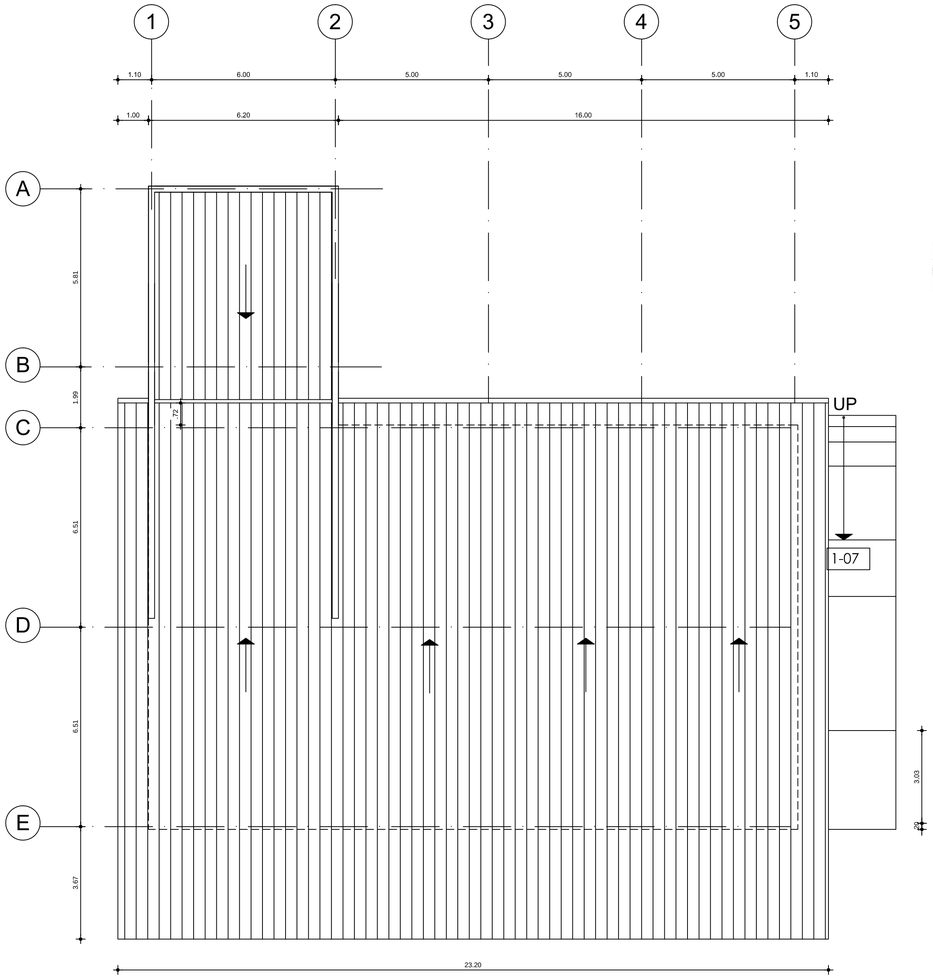

ROOF PLAN

SCALE:_____1:100

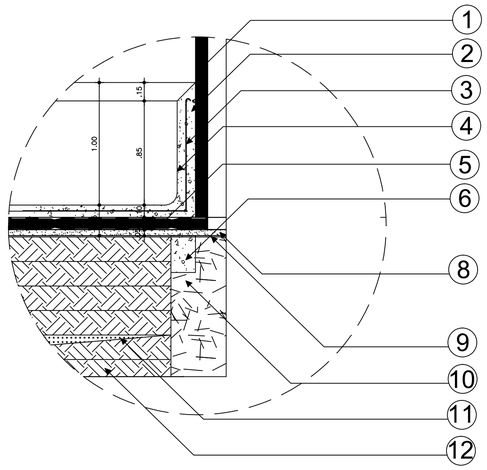

DETAIL 1

SCALE:_____1:25

FREEZING ROOM SYMBOLOGY

1. White/white panel MK100mm
2. Concrete protection wall and border
3. Electrowelded mesh 1 Φ 5,5mm @10 cm
4. smooth plaster
5. floor polypropylene panel 100mm
6. structural chain
8. concrete floor 5cm Electrowelded 3,5mm 15x15
9. double layer of polyethylene greenhouse type
10. Concrete wall (see structural drawings)
11. rubble layer for drainage
12. Compacted gravel
13. Roof white/white panel MK 150 mm
14. block wall - 2 side plastered
15. PVC 6" pipe (perforated for drainage)
16. concrete floor in platform
20. Rollup door 2.70x h2.60 panel MK100mm special ironwork for cold rooms
21. Sliding door 3.1 x h.4.0 panel MK100mm speciall ironwork for cold rooms
22. Rollup door 2.32 x 3.00 h panel MK100mm special ironwork for cold rooms
24. Loanding dock seal 3.50 x h.3.35 x .60 bottom

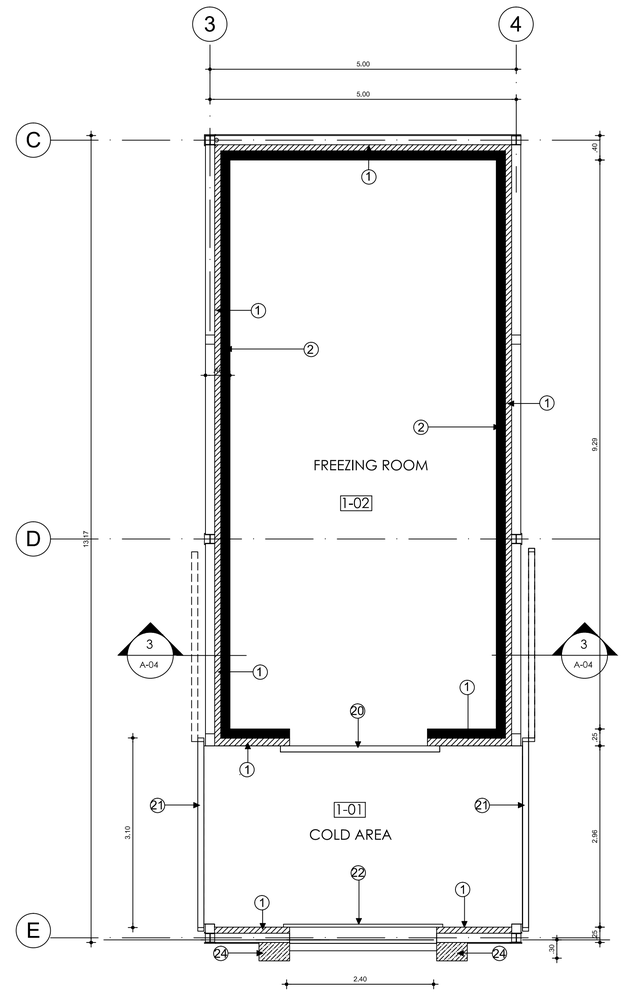

FLOOR PLAN - FREEZING ROOM

SCALE:_____1:50

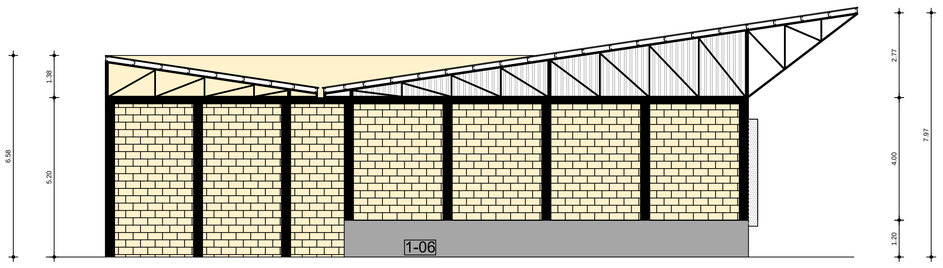

2
A1-1

SECTION 2

SCALE:_____1:100

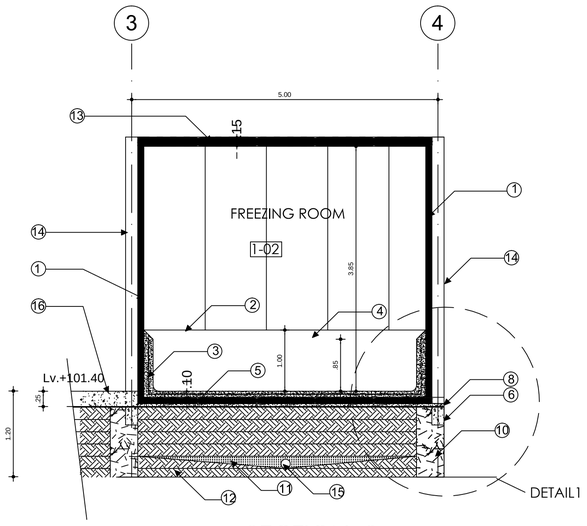

3
A-04

SECTION 3

SCALE:_____1:50

FREEZING ROOM EQUIPMENT'S SPECIFICATIONS

STEEL PLATE: GALVANIZED WITH G90 onz/pie LAYER. THICKNESS 0,40 . PRE-PAINTED WHITE COLOR AND FOIE PROTECTION. HIGH RESISTANCE TO CORROSION. INCLUDES 0.8 MICRON OF PRIMING COAT OVER GALVANIZED.

POLYPROPYLENE: ASTDM 1622 STANDARDS. 90% STRUCTURE OF CLOSED CELLS. COMPRESSION FORCES 1,12 Kg/CM2. THERMAL CONDUCTIVITY 0,14 b/u INCH/FOOT. TENSION FORCES 1.76 Kg/cm2. MAXIMUM TEMPERATURE + 80C. MIN -40-C.

PANELS: MINIMUM PANEL DENSITY 38 Kg/m3. JOINT BETWEEN MALE/FEMALE PANELS

FREEZING EQUIPMENTS: EQUIPMENTS OF 8HP TEMPERATURE -40-C . CONDENSING UNIT 220VOLTS, 3 PHASES. LOW TEMPERATURE APPLICATION. ECOLOGICAL REFRIGERATION R404A CONNECTION 208-230 /3 ph /60Hz. MEDIUM SILHOUETTE EVAPORATOR. ELECTRIC DEFROST WITH COIL AND FOLDING TRAY RESISTANCE.

AREA	FINISHING
	PLASTERED & PAINTED
	STRUCTURE PAINTED / WALLS PLASTERED & PAINTED
	CONCRETE
	PLAIN BLOCK & PAINTED

NARCOTICS AFFAIRS OFFICE - COSTA RICA

SECONDARY INSPECTION SITE FOR KM35 – COSTA RICA POLICE

DESCRIPTION:
INSPECTION BLOCK
ROOF PLAN – SECTIONS
FREEZING ROOM DETAILS

UNITS: METERS
VERSION: 01
CODE: 0001
DATE: FEBRUARY– 2013
DRAWN BY: MARIO NARVAEZ

SCALE: LISTED
ACAD FILE: DWG
SECOND INSPECT ARCH.dwg
SHEET #: A1-2
TOTAL SHEETS: 4

PROJECT COORDINATOR: MARIO NARVAEZ, NAS ENGINEER
NAO ACCEPTANCE: MARCELYN SANCHEZ, NARCOTICS AFFAIRS OFFICE
ACCEPTED BY: POLICE REPRESENTATIVE NAME, POLICE REPRESENTATIVE
PROFESSIONAL RESPONSIBLE: CONTRACTOR NAME, CONSTRUCTION RESPONSIBLE

LOCAL AUTHORITIES APPROVALS: