SOLICITATION/CONTRACT/ORDER FOR COMMERCIAL ITEMS

OFFEROR TO COMPLETE BLOCKS 12, 17, 23, 24, AND 30

1. REQUISITION NUMBER: WF7LKT02390401

2. CONTRACT NO.	3. AWARD/EFFECTIVE DATE	4. ORDER NUMBER	5. SOLICITATION NUMBER	6. SOLICITATION ISSUE DATE
			W913FT-10-R-0049	11-Sep-2010

7. FOR SOLICITATION INFORMATION CALL:	a. NAME	b. TELEPHONE NUMBER *(No Collect Calls)*	8. OFFER DUE DATE/LOCAL TIME
	ROSALBA MATEUS	571-383-2552	04:00 PM 17 Sep 2010

9. ISSUED BY — CODE W913FT

ACC-TA, RCO BOGOTA
U.S. EMBASSY-BOGOTA
USMILGRP, UNIT 5136
AP0 AA 34038-5136

TEL: 011-571383-2552
FAX: 011-571383-2084

10. THIS ACQUISITION IS
- [X] UNRESTRICTED
- [ ] SET ASIDE: % FOR
  - [ ] SB
  - [ ] HUBZONE SB
  - [ ] 8(A)
  - [ ] SVC-DISABLED VET-OWNED SB
  - [ ] EMERGING SB

SIZE STD: NAICS:

11. DELIVERY FOR FOB DESTINATION UNLESS BLOCK IS MARKED
- [ ] SEE SCHEDULE

12. DISCOUNT TERMS

- [ ] 13a. THIS CONTRACT IS A RATED ORDER UNDER DPAS (15 CFR 700)

13b. RATING

14. METHOD OF SOLICITATION
- [ ] RFQ
- [ ] IFB
- [X] RFP

15. DELIVER TO — CODE WF7LKT

USMILGP COLOMBIA - WAREHOUSE
ROY DE HOYOS
NUEVA ZONA DE AVIACION
HANGAR 18 PTA 6 VIA CATAM
BOGOTA
TEL: 423-8416 FAX: 423-8411

16. ADMINISTERED BY — CODE

17a. CONTRACTOR/ OFFEROR — CODE

TEL. — FACILITY CODE

18a. PAYMENT WILL BE MADE BY — CODE

- [ ] 17b. CHECK IF REMITTANCE IS DIFFERENT AND PUT SUCH ADDRESS IN OFFER

18b. SUBMIT INVOICES TO ADDRESS SHOWN IN BLOCK 18a. UNLESS BLOCK BELOW IS CHECKED [ ] SEE ADDENDUM

19. ITEM NO.	20. SCHEDULE OF SUPPLIES/ SERVICES	21. QUANTITY	22. UNIT	23. UNIT PRICE	24. AMOUNT
	SEE SCHEDULE				

25. ACCOUNTING AND APPROPRIATION DATA

26. TOTAL AWARD AMOUNT (For Govt. Use Only)

- [X] 27a. SOLICITATION INCORPORATES BY REFERENCE FAR 52.212-1. 52.212-4. FAR 52.212-3. 52.212-5 ARE ATTACHED. ADDENDA [X] ARE [ ] ARE NOT ATTACHED
- [ ] 27b. CONTRACT/PURCHASE ORDER INCORPORATES BY REFERENCE FAR 52.212-4. FAR 52.212-5 IS ATTACHED. ADDENDA [ ] ARE [ ] ARE NOT ATTACHED

28. CONTRACTOR IS REQUIRED TO SIGN THIS DOCUMENT AND RETURN 0 COPIES
- [ ] TO ISSUING OFFICE. CONTRACTOR AGREES TO FURNISH AND DELIVER ALL ITEMS SET FORTH OR OTHERWISE IDENTIFIED ABOVE AND ON ANY ADDITIONAL SHEETS SUBJECT TO THE TERMS AND CONDITIONS SPECIFIED HEREIN.

29. AWARD OF CONTRACT: REFERENCE
- [ ] OFFER DATED . YOUR OFFER ON SOLICITATION (BLOCK 5), INCLUDING ANY ADDITIONS OR CHANGES WHICH ARE SET FORTH HEREIN, IS ACCEPTED AS TO ITEMS:

30a. SIGNATURE OF OFFEROR/CONTRACTOR

31a. UNITED STATES OF AMERICA (SIGNATURE OF CONTRACTING OFFICER)

31c. DATE SIGNED

30b. NAME AND TITLE OF SIGNER *(TYPE OR PRINT)*

30c. DATE SIGNED

31b. NAME OF CONTRACTING OFFICER *(TYPE OR PRINT)*

TEL: EMAIL:

SOLICITATION/CONTRACT/ORDER FOR COMMERCIAL ITEMS (CONTINUED)					PAGE 2 OF 39
19. ITEM NO.	20. SCHEDULE OF SUPPLIES/ SERVICES	21. QUANTITY	22. UNIT	23. UNIT PRICE	24. AMOUNT
	SEE SCHEDULE				

32a. QUANTITY IN COLUMN 21 HAS BEEN

☐ RECEIVED ☐ INSPECTED ☐ ACCEPTED, AND CONFORMS TO THE CONTRACT, EXCEPT AS NOTED: _____

32b. SIGNATURE OF AUTHORIZED GOVERNMENT REPRESENTATIVE	32c. DATE	32d. PRINTED NAME AND TITLE OF AUTHORIZED GOVERNMENT REPRESENTATIVE

32e. MAILING ADDRESS OF AUTHORIZED GOVERNMENT REPRESENTATIVE	32f. TELEPHONE NUMBER OF AUTHORIZED GOVERNMENT REPRESENTATIVE
	32g. E-MAIL OF AUTHORIZED GOVERNMENT REPRESENTATIVE

33. SHIP NUMBER	34. VOUCHER NUMBER	35. AMOUNT VERIFIED CORRECT FOR	36. PAYMENT	37. CHECK NUMBER
☐ PARTIAL ☐ FINAL			☐ COMPLETE ☐ PARTIAL ☐ FINAL	

38. S/R ACCOUNT NUMBER	39. S/R VOUCHER NUMBER	40. PAID BY

41a. I CERTIFY THIS ACCOUNT IS CORRECT AND PROPER FOR PAYMENT		42a. RECEIVED BY *(Print)*	
41b. SIGNATURE AND TITLE OF CERTIFYING OFFICER	41c. DATE	42b. RECEIVED AT *(Location)*	
		42c. DATE REC'D *(YY/MM/DD)*	42d. TOTAL CONTAINERS

Section SF 1449 - CONTINUATION SHEET

ITEM NO	SUPPLIES/SERVICES	QUANTITY	UNIT	UNIT PRICE	AMOUNT
0001		1	Each		
	MOTOR EQUIPMENT FFP Vendor shall provide the items/equipment as stated in the list below. POC: LtCol Michel Monbouquette. PHONE: 2661214/1215. FOB: Destination PURCHASE REQUEST NUMBER: WF7LKT02390401				
				NET AMT	

ITEM NO	SUPPLIES/SERVICES	QUANTITY	UNIT	UNIT PRICE	AMOUNT
0004					
	IVA FFP IVA Taxes shall be provided in the quotation but removed from the final contract as this action will be exempt from taxes. A tax exmpt letter will be provided to the winning. FOB: Destination PURCHASE REQUEST NUMBER: WF7LKT02390401				
				NET AMT	

INSPECTION AND ACCEPTANCE TERMS

Supplies/services will be inspected/accepted at:

CLIN	INSPECT AT	INSPECT BY	ACCEPT AT	ACCEPT BY
0001	Destination	Government	Destination	Government
0004	Destination	Government	Destination	Government

DELIVERY INFORMATION

CLIN	DELIVERY DATE	QUANTITY	SHIP TO ADDRESS	UIC
0001	25-OCT-2010	1	USMILGP COLOMBIA - WAREHOUSE ROY DE HOYOS NUEVA ZONA DE AVIACION HANGAR 18 PTA 6 VIA CATAM BOGOTA 423-8416 FOB: Destination	WF7LKT
0004	25-OCT-2010		(SAME AS PREVIOUS LOCATION) FOB: Destination	WF7LKT

PAYMENT AND SHIPPING PROCESS
SHIPPING & PAYMENT INSTRUCTIONS
Note:

PLEASE SIGN THE FIRST PAGE OF THIS CONTRACT:

- If your contract was written on Standard Form (SF) 1449: Complete Blocks 30a, b, c (all three blocks must be completed).
- If your contract was written on Department of Defense (DD) Form 1155: Complete Blocks 16 (all ee blocks must be completed).
- If your contract was written on Standard Form (SF) 1442: Complete Blocks 21, 22, 23, 24
- If your contract was written on any other form, you **must** use DD Form 250 (completed) as the receiving report.

POR FAVOR FIRME LA PRIMERA PAGINA DE ESTE CONTRATO COMO SIGUE:

- Si su contrato fue realizado en la forma estándar (SF) 1449: Complete las casillas 30a, b, c (los tres deben ser llenados).
- Si su contrato fue realizado en la forma del departamento de defensa (DD) 1155; complete la casilla 16.
- Si su contrato fue realizado en la forma estándar (SF) 1442: Complete las casillas 21, 22, 23 y 24.
- Si su contrato fue realizado en otra forma, usted debe usar la DD 250 (completa) como el reporte de recibido.

RETURN A SIGN COPY OF THE FIRST PAGE OF THIS CONTRACT BY EMAIL:
You must distribute copies of these completed forms as follows.

1) Contract File: Will be received by:
   Rosalba Mateus Email: mateusr@tcsc.southcom.mil
   Robert Devisser Email: Robert.devisser@tcsc.southcom.mil
2) Paying Office & Resource Management Office (RMO): Receiving Report will be received by:

Tatiana Suarez Email: Tatiana.suarez.co@tcsc.southcom.mil

DEVUELVA UNA COPIA FIRMADA DE LA PRIMERA HOJA DE ESTE CONTRATO POR E-MAIL:

Usted debe distribuir copias de esas formas completas como sigue.

1) Contratos: Debe ser enviado a:
   Rosalba Mateus Email: mateusr@tcsc.southcom.mil
   Robert Devisser Email: robert.devisser@tcsc.southcom.mil

2) Oficina de pagos y Oficina de Administración de Recursos (RMO): "Reporte de recibido" debe ser enviado a:
   Tatiana Suarez Email: tatiana.suarez.co@tcsc.southcom.mil

SHIPPING METHODS / FORMAS DE ENVIO:

SHIPPING INSTRUCTIONS:

If sent to / Si lo envia a:

USMILGP COLOMBIA - WAREHOUSE
ROY DE HOYOS
NUEVA ZONA DE AVIACION
HANGAR 18 PTA 6 VIA CATAM
BOGOTA
423-8416

PAYMENT PROCESS / PROCESO DE PAGO:

TO SUBMIT THE INVOICE:

Present an Original invoice submitted to the USMILGRP Payment Office at one of the below addresses:

Within Colombia:

Billing Address:
Calle 24 Bis 48-50 (POST 1)
US Embassy
USMILGRP – Contracting Office
Attn: Tatiana Suares
BOGOTA, COLOMBIA
TEL: 011-571-383-2601

IMPORTANT: Services may be received/accepted and paid on an incremental basis. For example, if you have a contract that provides for a service on a monthly basis, you must provide invoice documentation at the end of every month so that you may receive monthly payments. Please ensure all invoices have the Contract Number.

IMPORTANTE:
Los servicios pueden ser recibidos / aceptados y pagados con los incrementos base. Por ejemplo si usted tiene un contrato que provee un servicio de base mensual, usted debe proveer la factura al final de cada mes para que así mismo usted reciba los pagos mensualmente.

Por favor asegúrese que todas las facturas tengan el número del contrato, la orden de compra o el número contrato.

Or if sent from the U.S:

Billing Address:
USMILGRP-BOGOTA
ATTN: ROBERT DeVISSER
CONTRACTING OFFICE
UNIT 5140
APO AA 34038

Please submit a copy of the Contract, Purchase Order or the BPA Call with each invoice. Contract number W913FT-10-

If the invoice is for a partial payment please indicate that on the invoice. If the invoice is for full payment also indicate that on the invoice.

You must distribute copies of these completed forms as follows.

1) Contract File: Receiving Report will be received by:
   Rosalba Mateus Email: mateusr@tcsc.southcom.mil
   Robert Devisser Email: Robert.devisser@tcsc.southcom.mil

2) Paying Office & Resource Management Office (RMO): Receiving Report will be received by:
   Tatiana Suarez Email: Tatiana.suarez.co@tcsc.southcom.mil

WHEN DELIVERING THE PRODUCTS OR COMPLETING THE CONTRACTED SERVICES, HAVE THE GOVERNMENT REPRESENTATIVE COMPLETE AND SIGN BLOCKS THE FOLLOWING:

- If your contract was written on Standard Form (SF) 1449: Complete Blocks 32a (all three blocks must be checked), 32b, 32c, 32d, 32e , 32f, 32g 33, 42a (print name), 42b (address), 42c, 42d (phone number for Paying Office use), or use DD Form 250 (completed).
- If your contract was written on Department of Defense (DD) Form 1155: Complete Blocks 27a (all three blocks must be checked), 27 b, c, d, e, f, g, (address & phone number for Paying Office use), 28 (check one)
- If your contract was written on Standard Form (SF) 1442: Complete Blocks 21, 22, 23
- If your contract was written on any other form, you **must** use DD Form 250 (completed) as the receiving report.

CUANDO SE HACE LA ENTREGA DE PRODUCTO O SE COMPLETA LA PRESTACION DEL SERVICIO, ESTA/ESTE DEBE TENER LA FIRMA DE UN REPRESENTANTE DEL GOBIERNO AMERICANO. UD DEBE COMPLETAR Y FIRMAR LAS CASILLAS COMO SE INDICA.

- Si su contrato fue realizado en la forma estándar (SF) 1449: Complete las casillas 32a (todos deben ser llenados). 32b, 32c, 32d, 32e 32f, 32g, 33, 42a (nombre en letra imprenta), 42b (dirección), 42c, 42d (Número telefónico para el uso de la oficina de pagos). O puede usar la forma DD 250 (completa).
- Si su contrato fue realizado en la forma del departamento de defensa (DD) 1155; complete las casillas 27a (las 3 deben ser completadas), 27b, c, d, e, f. g (dirección y teléfono para el uso de la oficina de pagos) y revisar la casilla 28.
- Si su contrato fue realizado en la forma estándar (SF) 1442: Complete las casillas 21, 22 y 23.

- Si su contrato fue realizado en otra forma, usted debe usar la DD 250 (completa) como el reporte de recibido.

A COPY OF THIS PAGE MUST BE ATTACHED TO THE INVOICE SUBMITTED FOR PAYMENT. THE INVOICE WILL NOT BE PROCESSED UNLESS THESE INSTRUCTIONS ARE FOLLOWED.

When the contract requires delivery at the Warehouse 18 of Catam, an access authorization shall be requested at least 24 hours prior in the following phone number: 011-571-4238400.

EXECUTING ALL OF THE ACTIONS WILL ENSURE THAT YOU RECEIVE PAYMENT QUICKLY. IF ANY MISSING INFORMATION INVOICES WILL BE REJECTED AND PAYMENT WILL NOT BE APPROVED.

PARA RADICAR LA FACTURA:

Radicar una factura original en el Grupo Militar, Embajada Americana en la siguiente direccion:

Dentro de Colombia:

Oficina de Pago:
Calle 24 Bis 48-50 (PUESTO # 1)
US Embassy
USMILGRP – Contracting Office
Attn: Tatitana Suarez
BOGOTA, COLOMBIA
TEL: 011-571-383-2601

Si se envia desde los Estados Unidos:

Oficina de Pago:
USMILGRP-BOGOTA
ATTN: ROBERT DeVISSER
CONTRACTING OFFICE
UNIT 5140
APO AA 34038

Nota:

FAVOR FIRMAR LA PRIMERA PAGINA DE ESTE CONTRATO (BLOQUE 16) Y DEVOLVER VIA FAX (011-571-315-3010).
EN EL MOMENTO DE LA ENTREGA DE LA MERCANCIA O AL REALIZARSE ALGUN SERVICIO, FAVOR HACER FIRMAR AL REPRESENTANTE DEL GRUPO MILITAR LOS BLOQUES 32a,b,c,d,e,f,g QUE SE ENCUENTRAN EN LA PRIMERA PAGINA DEL CONTRATO. UNA COPIA DE ESTA HOJA DEBE SER ADJUNTADA A LA FACTURA A RADICAR. LA FACTURA NO SE PROCESARA SI NO SIGUE ESTAS INSTRUCCIONES.

Cuando la entrega de los elementos sea necesaria hacerla en el Hangar 18 de Catam, debe solicitarse el permiso de ingreso correspondiente con (24) horas de anterioridad comunicándose al número telefónico: 011-571-423-8400.

Por favor anexe una copia del contrato, orden de compra o BPA Call a cada factura.

Indique en la factura si el pago a efectuar es por un valor total o por un valor parcial del contrato.

EJECUTAR LAS ANTERIORES ACCIONES, GARANTIZA QUE EL PAGO DE SUS FACTURAS SE REALICE OPORTUNAMENTE. CUALQUIER INFORMACION O REQUISITO NO CUMPLIDO, SERA MOTIVO PARA NO RECIBIR LA FACTURACION , NI EMPEZAR EL DEBIDO PROCESO DE PAGO.

ADDENDUM TO FAR 52.212-1

ADDENDUM TO FAR 52.212-1 INSTRUCTIOS TO OFFERORS – COMMERCIAL ITEMS

ADDITIONAL INSTRUCTIONS AND INFORMATION:

1. PROPOSAL SUBMITTAL INSTRUCTIONS: Offerors are required to submit a complete proposal package as listed in Paragraph 2 below to include financial capability information/ documentation. Proposal packages must be received on or before the solicitation closing date.

a. Proposal packages will be accepted via e-mail to:
Rosalba Mateus
mateusr@tcsc.southcom.mil
mateus.rosalba2@us.army.mil
Commercial: 011-571-383-2552

Alternate:
Annabelle F. Miller
devisserdd@tcsc.southcom.mil
Commercial: 011-571-383-4225

b. The Government reserves the right to extend the notification deadline of the solicitation up to the date proposals are initially due.

c. Proposals submitted electronically via e-mail shall be prepared in Microsoft application programs (i.e., Word 2000 and/or Excel 2000). Proposals submitted electronically do not relinquish the Offeror's responsibility for providing a hard copy of the complete proposal, if the contracting officer requires submission of a hard copy.

d. Minimum Proposal Acceptance Period - The proposal acceptance period is 60 days. The Offeror shall make a clear statement in its Proposal Documentation that the proposal is valid for a period of not less than 60 days from receipt of offers.

2. PROPOSAL FILES Offeror shall submit the following:

a. Certification that the contractor will provide the equipment/items on the list included in the solicitation on a brand name or equal basis. Certification shall clearly indicate that the contractor can meet this requirement. Certification shall be on the company letterhead and signed by an authorized representative of the company.

If an "equal" item is proposed, contractor shall submit descriptive literature or brochures for the proposed "equal" item that demonstrate that it meets or exceeds the salient characteristics of the requirement. **This is only required if an "Equal" item is proposed.**

If an "equal" item is proposed, the following information shall be provided with the certification. **This is only required if an "Equal" item is proposed.**

Brand Name Proposed: _____
Make and/or Model No.: _____
Manufacturer's Name: _____
Manufacturer's Address: _____
Manufacturer's Website/URL: _____

b. Excel pricing spreadsheet containing the list of items/spare parts, unit price and extended price.

c. Standard Form 1449, Solicitation/Contract/Order for Commercial Items with Blocks 12, 17a, 30a, 30b and 30c completed by the offeror.. This form shall be signed by an authorized representative of the company. Include acknowledgment of Amendments, if any.

d. Schedule of Supplies and Services indicating total proposed cost. Total amount should correspond to the total amount in the Excel pricing spreadsheet.

e. Completed Representations and Certifications

FAR 52.212-3 Offeror Representations and Certifications – Commercial Items Alternate 1

DFARS 252.212-7000 Offeror Representations and Certifications – Commercial Items

f. Financial Capability Information/Documentation. Offeror shall submit information and evidence of financial capability i.e., financial statements, bank confirmation of accounts, bank letters of credit. The information will be reviewed to ensure that the offeror has the financial capability to perform the contract given the magnitude of the proposed work. This element of financial capability is part of overall contractor responsibility. Offerors must be considered responsible to be eligible for awards.

CLAUSES INCORPORATED BY REFERENCE

52.204-4	Printed or Copied Double-Sided on Recycled Paper	AUG 2000
52.209-6	Protecting the Government's Interest When Subcontracting With Contractors Debarred, Suspended, or Proposed for Debarment	SEP 2006
52.211-6	Brand Name or Equal	AUG 1999
52.212-1	Instructions to Offerors--Commercial Items	JUN 2008
52.212-4	Contract Terms and Conditions--Commercial Items	JUN 2010
52.214-34	Submission Of Offers In The English Language	APR 1991
52.225-14	Inconsistency Between English Version And Translation Of Contract	FEB 2000
52.229-6	Taxes--Foreign Fixed-Price Contracts	JUN 2003
52.247-27	Contract Not Affected by Oral Agreement	APR 1984
252.203-7002	Requirement to Inform Employees of Whistleblower Rights	JAN 2009

252.209-7001	Disclosure of Ownership or Control by the Government of a Terrorist Country	JAN 2009
252.209-7004	Subcontracting With Firms That Are Owned or Controlled By The Government of a Terrorist Country	DEC 2006
252.222-7002	Compliance With Local Labor Laws (Overseas)	JUN 1997
252.225-7041	Correspondence in English	JUN 1997
252.225-7042	Authorization to Perform	APR 2003
252.232-7008	Assignment of Claims (Overseas)	JUN 1997
252.232-7010	Levies on Contract Payments	DEC 2006
252.233-7001	Choice of Law (Overseas)	JUN 1997

CLAUSES INCORPORATED BY FULL TEXT

52.212-2 EVALUATION--COMMERCIAL ITEMS (JAN 1999)

(a) The Government will award a contract resulting from this solicitation to the responsible offeror whose offer conforming to the solicitation will be most advantageous to the Government, price and other factors considered. The following factors shall be used to evaluate offers:

1. Tehnical Acceptability

i. This solicitation includes requirements for the required spare parts to be provided on a Brand Name or equal" basis, in accordance with FAR 11.104 and the FAR provision 52.211-6 incorporated into this solicitation. Offerors may choose to offer the specified item (see list under schedule B) or another product determined to be "equal" to the specified product. All "or equal" products to be delivered under the resulting contract shall comply with the salient characteristics set forth in the solicitation. These characteristics shall be used by the Government to determine that the offered products are equal to the specified product.

ii. Technical proposal shall consist of and must include:

(1) Certification that the contractor will provide the tools on the list included in the solicitation on a brand name or equal basis. Certification shall be on the company letterhead and signed by an authorized representative of the company.
(2) Descriptive literature or brochures for the proposed "equal" item that demostrate that it meets or exceeds the salient characteristics of the requirement.
(3) BRAND NAME OR EQUAL Information: Offerors shalll provide the following information for any "or equal" items proposed in lieu of the specific manufacturer, brand, make, model listed above:

Brand name proposed: _____

Make and/or Model No.: _____

Manufacturer's Name: _____

Manufacturer's Address: _____

Manufacturer's Website/URL: _____

Note: The offeror and the Contracting Officer agree that if the spaces above are completed that the offeror is offering the brand in accordance with the specifications/requirements as stated in the solicitation.

2. Price

The total evaluated price shall be the basis for evaluating price for contract award decision purposes. Total evaluated price shall be determinaed by adding the proposed prices on the list of items stated in the solicitation. Contractor shall price all line items in the list of items/products. In the event the unit price(s) and extended prices (s) are ambiguous, the Government shall use the indicated unit price(s) for evaluation and award purposes. The Government reserves the right to make an award on any quantity less than the quantity offered, at the unit cost or prices offered, unless the offeror specifies otherwise in the proposal.

(b) Options. The Government will evaluate offers for award purposes by adding the total price for all options to the total price for the basic requirement. The Government may determine that an offer is unacceptable if the option prices are significantly unbalanced. Evaluation of options shall not obligate the Government to exercise the option(s).

(c) A written notice of award or acceptance of an offer, mailed or otherwise furnished to the successful offeror within the time for acceptance specified in the offer, shall result in a binding contract without further action by either party. Before the offer's specified expiration time, the Government may accept an offer (or part of an offer), whether or not there are negotiations after its receipt, unless a written notice of withdrawal is received before award.

(End of provision)

52.212-3 OFFEROR REPRESENTATIONS AND CERTIFICATIONS--COMMERCIAL ITEMS (AUG 2009)

An offeror shall complete only paragraph (b) of this provision if the offeror has completed the annual representations and certifications electronically at http://orca.bpn.gov. If an offeror has not completed the annual representations and certifications electronically at the ORCA website, the offeror shall complete only paragraphs (c) through (m) of this provision.

(a) Definitions. As used in this provision --

"Emerging small business" means a small business concern whose size is no greater than 50 percent of the numerical size standard for the NAICS code designated.

"Forced or indentured child labor" means all work or service-

(1) Exacted from any person under the age of 18 under the menace of any penalty for its nonperformance and for which the worker does not offer himself voluntarily; or

(2) Performed by any person under the age of 18 pursuant to a contract the enforcement of which can be accomplished by process or penalties.

Inverted domestic corporation means a foreign incorporated entity which is treated as an inverted domestic corporation under 6 U.S.C. 395(b), i.e., a corporation that used to be incorporated in the United States, or used to be a partnership in the United States, but now is incorporated in a foreign country, or is a subsidiary whose parent corporation is incorporated in a foreign country, that meets the criteria specified in 6 U.S.C. 395(b), applied in accordance with the rules and definitions of 6 U.S.C. 395(c).

Manufactured end product means any end product in Federal Supply Classes (FSC) 1000-9999, except--

(1) FSC 5510, Lumber and Related Basic Wood Materials;

(2) Federal Supply Group (FSG) 87, Agricultural Supplies;

(3) FSG 88, Live Animals;

(4) FSG 89, Food and Related Consumables;

(5) FSC 9410, Crude Grades of Plant Materials;

(6) FSC 9430, Miscellaneous Crude Animal Products, Inedible;

(7) FSC 9440, Miscellaneous Crude Agricultural and Forestry Products;

(8) FSC 9610, Ores;

(9) FSC 9620, Minerals, Natural and Synthetic; and

(10) FSC 9630, Additive Metal Materials.

Place of manufacture means the place where an end product is assembled out of components, or otherwise made or processed from raw materials into the finished product that is to be provided to the Government. If a product is disassembled and reassembled, the place of reassembly is not the place of manufacture.

Restricted business operations means business operations in Sudan that include power production activities, mineral extraction activities, oil-related activities, or the production of military equipment, as those terms are defined in the Sudan Accountability and Divestment Act of 2007 (Pub. L. 110-174). Restricted business operations do not include business operations that the person (as that term is defined in Section 2 of the Sudan Accountability and Divestment Act of 2007) conducting the business can demonstrate--

(1) Are conducted under contract directly and exclusively with the regional government of southern Sudan;

(2) Are conducted pursuant to specific authorization from the Office of Foreign Assets Control in the Department of the Treasury, or are expressly exempted under Federal law from the requirement to be conducted under such authorization;

(3) Consist of providing goods or services to marginalized populations of Sudan;

(4) Consist of providing goods or services to an internationally recognized peacekeeping force or humanitarian organization;

(5) Consist of providing goods or services that are used only to promote health or education; or

(6) Have been voluntarily suspended.

Service-disabled veteran-owned small business concern--

(1) Means a small business concern--

(i) Not less than 51 percent of which is owned by one or more service-disabled veterans or, in the case of any publicly owned business, not less than 51 percent of the stock of which is owned by one or more service-disabled veterans; and

(ii) The management and daily business operations of which are controlled by one or more service-disabled veterans or, in the case of a service-disabled veteran with permanent and severe disability, the spouse or permanent caregiver of such veteran.

(2) Service-disabled veteran means a veteran, as defined in 38 U.S.C. 101(2), with a disability that is service-connected, as defined in 38 U.S.C. 101(16).

"Small business concern" means a concern, including its affiliates, that is independently owned and operated, not dominant in the field of operation in which it is bidding on Government contracts, and qualified as a small business under the criteria in 13 CFR Part 121 and size standards in this solicitation.

Veteran-owned small business concern means a small business concern--

(1) Not less than 51 percent of which is owned by one or more veterans (as defined at 38 U.S.C. 101(2)) or, in the case of any publicly owned business, not less than 51 percent of the stock of which is owned by one or more veterans; and

(2) The management and daily business operations of which are controlled by one or more veterans.

"Women-owned business concern" means a concern which is at least 51 percent owned by one or more women; or in the case of any publicly owned business, at least 51 percent of the stock of which is owned by one or more women; and whose management and daily business operations are controlled by one or more women.

"Women-owned small business concern" means a small business concern--

(1) That is at least 51 percent owned by one or more women or, in the case of any publicly owned business, at least 51 percent of its stock is owned by one or more women; or

(2) Whose management and daily business operations are controlled by one or more women.

(b) (1) Annual Representations and Certifications. Any changes provided by the offeror in paragraph (b)(2) of this provision do not automatically change the representations and certifications posted on the Online Representations and Certifications Application (ORCA) website.

(2) The offeror has completed the annual representations and certifications electronically via the ORCA website at http://orca.bpn.gov. After reviewing the ORCA database information, the offeror verifies by submission of this offer that the representations and certifications currently posted electronically at FAR 52.212-3, Offeror Representations and Certifications--Commercial Items, have been entered or updated in the last 12 months, are current, accurate, complete, and applicable to this solicitation (including the business size standard applicable to the NAICS code referenced for this solicitation), as of the date of this offer and are incorporated in this offer by reference (see FAR 4.1201), except for paragraphs ----------.

(Offeror to identify the applicable paragraphs at (c) through (n) of this provision that the offeror has completed for the purposes of this solicitation only, if any.)

These amended representation(s) and/or certification(s) are also incorporated in this offer and are current, accurate, and complete as of the date of this offer.

Any changes provided by the offeror are applicable to this solicitation only, and do not result in an update to the representations and certifications posted on ORCA.]

(c) Offerors must complete the following representations when the resulting contract will be performed in the United States or its outlying areas. Check all that apply.

(1) Small business concern. The offeror represents as part of its offer that it ( ) is, ( ) is not a small business concern.

(2) Veteran-owned small business concern. (Complete only if the offeror represented itself as a small business concern in paragraph (c)(1) of this provision.) The offeror represents as part of its offer that it ( ) is, ( ) is not a veteran-owned small business concern.

(3) Service-disabled veteran-owned small business concern. (Complete only if the offeror represented itself as a veteran-owned small business concern in paragraph (c)(2) of this provision.) The offeror represents as part of its offer that it ( ) is, ( ) is not a service-disabled veteran-owned small business concern.

(4) Small disadvantaged business concern. (Complete only if the offeror represented itself as a small business concern in paragraph (c)(1) of this provision.) The offeror represents, for general statistical purposes, that it ( ) is, ( ) is not a small disadvantaged business concern as defined in 13 CFR 124.1002.

(5) Women-owned small business concern. (Complete only if the offeror represented itself as a small business concern in paragraph (c)(1) of this provision.) The offeror represents that it ( ) is, ( ) is not a women-owned small business concern.

Note: Complete paragraphs (c)(6) and (c)(7) only if this solicitation is expected to exceed the simplified acquisition threshold.

(6) Women-owned business concern (other than small business concern). (Complete only if the offeror is a women-owned business concern and did not represent itself as a small business concern in paragraph (c)(1) of this provision.) The offeror represents that it ( ) is, a women-owned business concern.

(7) Tie bid priority for labor surplus area concerns. If this is an invitation for bid, small business offerors may identify the labor surplus areas in which costs to be incurred on account of manufacturing or production (by offeror or first-tier subcontractors) amount to more than 50 percent of the contract price:

_____

(8) Small Business Size for the Small Business Competitiveness Demonstration Program and for the Targeted Industry Categories under the Small Business Competitiveness Demonstration Program. (Complete only if the offeror has represented itself to be a small business concern under the size standards for this solicitation.)

(i) (Complete only for solicitations indicated in an addendum as being set-aside for emerging small businesses in one of the designated industry groups (DIGs).) The offeror represents as part of its offer that it ( ) is, ( ) is not an emerging small business.

(ii) (Complete only for solicitations indicated in an addendum as being for one of the targeted industry categories (TICs) or designated industry groups (DIGs).) Offeror represents as follows:

(A) Offeror's number of employees for the past 12 months (check the Employees column if size standard stated in the solicitation is expressed in terms of number of employees); or

(B) Offeror's average annual gross revenue for the last 3 fiscal years (check the Average Annual Gross Number of Revenues column if size standard stated in the solicitation is expressed in terms of annual receipts).

(Check one of the following):

Average Annual

Number of Employees Gross Revenues

___ 50 or fewer ___ $1 million or less

___ 51 - 100 ___ $1,000,001 - $2 million

___ 101 - 250 ___ $2,000,001 - $3.5 million

___ 251 - 500 ___ $3,500,001 - $5 million

___ 501 - 750 ___ $5,000,001 - $10 million

___ 751 - 1,000 ___ $10,000,001 - $17 million

___ Over 1,000 ___ Over $17 million

(9) (Complete only if the solicitation contains the clause at FAR 52.219-23, Notice of Price Evaluation Adjustment for Small Disadvantaged Business Concerns or FAR 52.219-25, Small Disadvantaged Business Participation Program-Disadvantaged Status and Reporting, and the offeror desires a benefit based on its disadvantaged status.)

(i) General. The offeror represents that either--

(A) It ( ) is, ( ) is not certified by the Small Business Administration as a small disadvantaged business concern and identified, on the date of this representation, as a certified small disadvantaged business concern in the database maintained by the Small Business Administration (PRO-Net), and that no material change in disadvantaged ownership and control has occurred since its certification, and, where the concern is owned by one or more individuals claiming disadvantaged status, the net worth of each individual upon whom the certification is based does not exceed $750,000 after taking into account the applicable exclusions set forth at 13 CFR 124.104(c)(2); or

(B) It ( ) has, ( )(has not submitted a completed application to the Small Business Administration or a Private Certifier to be certified as a small disadvantaged business concern in accordance with 13 CFR 124, Subpart B, and a decision on that application is pending, and that no material change in disadvantaged ownership and control has occurred since its application was submitted.

(ii) Joint Ventures under the Price Evaluation Adjustment for Small Disadvantaged Business Concerns. The offeror represents, as part of its offer, that it is a joint venture that complies with the requirements in 13 CFR 124.1002(f) and that the representation in paragraph (c)(9)(i) of this provision is accurate for the small disadvantaged business concern that is participating in the joint venture. (The offeror shall enter the name of the small disadvantaged business concern that is participating in the joint venture: _____.)

(10) HUBZone small business concern. (Complete only if the offeror represented itself as a small business concern in paragraph (c)(1) of this provision.) The offeror represents, as part of its offer, that--

(i) It ( ) is, ( ) is not a HUBZone small business concern listed, on the date of this representation, on the List of Qualified HUBZone Small Business Concerns maintained by the Small Business Administration, and no material change in ownership and control, principal office, or HUBZone employee percentage has occurred since it was certified by the Small Business Administration in accordance with 13 CFR part 126; and

(ii) It ( ) is, ( ) is not s joint venture that complies with the requirements of 13 CFR part 126, and the representation in paragraph (c)(10)(i) of this provision is accurate for the HUBZone small business concern or concerns that are participating in the joint venture. (The offeror shall enter the name or names of the HUBZone small business concern

or concerns that are participating in the joint venture:_____.) Each HUBZone small business concern participating in the joint venture shall submit a separate signed copy of the HUBZone representation.

(d) Certifications and representations required to implement provisions of Executive Order 11246--

(1) Previous Contracts and Compliance. The offeror represents that--

(i) It ( ) has, ( ) has not, participated in a previous contract or subcontract subject either to the Equal Opportunity clause of this solicitation, the and

(ii) It ( ) has, ( ) has not, filed all required compliance reports.

(2) Affirmative Action Compliance. The offeror represents that--

(i) It ( ) has developed and has on file, ( ) has not developed and does not have on file, at each establishment, affirmative action programs required by rules and regulations of the Secretary of Labor (41 CFR Subparts 60-1 and 60-2), or

(ii) It ( ) has not previously had contracts subject to the written affirmative action programs requirement of the rules and regulations of the Secretary of Labor.

(e) Certification Regarding Payments to Influence Federal Transactions (31 U.S.C. 1352). (Applies only if the contract is expected to exceed $100,000.) By submission of its offer, the offeror certifies to the best of its knowledge and belief that no Federal appropriated funds have been paid or will be paid to any person for influencing or attempting to influence an officer or employee of any agency, a Member of Congress, an officer or employee of Congress or an employee of a Member of Congress on his or her behalf in connection with the award of any resultant contract. If any registrants under the Lobbying Disclosure Act of 1995 have made a lobbying contact on behalf of the offeror with respect to this contract, the offeror shall complete and submit, with its offer, OMB Standard Form LLL, Disclosure of Lobbying Activities, to provide the name of the registrants. The offeror need not report regularly employed officers or employees of the offeror to whom payments of reasonable compensation were made.

(f) Buy American Act Certificate. (Applies only if the clause at Federal Acquisition Regulation (FAR) 52.225-1, Buy American Act --Supplies, is included in this solicitation.)

(1) The offeror certifies that each end product, except those listed in paragraph (f)(2) of this provision, is a domestic end product and that for other than COTS items, the offeror has considered components of unknown origin to have been mined, produced, or manufactured outside the United States. The offeror shall list as foreign end products those end products manufactured in the United States that do not qualify as domestic end products, i.e., an end product that is not a COTS item and does not meet the component test in paragraph (2) of the definition of "domestic end product." The terms "commercially available off-the-shelf (COTS) item," "component," "domestic end product," "end product," "foreign end product," and "United States" are defined in the clause of this solicitation entitled "Buy American Act--Supplies."
(2) Foreign End Products:

Line Item No.:----------
Country of Origin:----------

(List as necessary)

(3) The Government will evaluate offers in accordance with the policies and procedures of FAR Part 25.

(g)(1) *Buy American Act-Free Trade Agreements-Israeli Trade Act Certificate*. (Applies only if the clause at FAR 52.225-3, Buy American Act-Free Trade Agreements-Israeli Trade Act, is included in this solicitation.)

(i) The offeror certifies that each end product, except those listed in paragraph (g)(1)(ii) or (g)(1)(iii) of this provision, is a domestic end product and that for other than COTS items, the offeror has considered components of unknown origin to have been mined, produced, or manufactured outside the United States. The terms “Bahrainian, Moroccan, Omani, or Peruvian end product,” “commercially available off-the-shelf (COTS) item,” “component,” “domestic end product,” “end product,” “foreign end product,” “Free Trade Agreement country,” “Free Trade Agreement country end product,” “Israeli end product,” and “United States” are defined in the clause of this solicitation entitled “Buy American Act-Free Trade Agreements-Israeli Trade Act.”

(ii) The offeror certifies that the following supplies are Free Trade Agreement country end products (other than Bahrainian, Moroccan, Omani, or Peruvian end products) or Israeli end products as defined in the clause of this solicitation entitled ``Buy American Act--Free Trade Agreements--Israeli Trade Act":

Free Trade Agreement Country End Products (Other than Bahrainian, Moroccan, Omani, or Peruvian End Products) or Israeli End Products:

Line Item No.

[List as necessary]

(iii) The offeror shall list those supplies that are foreign end products (other than those listed in paragraph (g)(1)(ii) of this provision) as defined in the clause of this solicitation entitled "Buy American Act-Free Trade Agreements-Israeli Trade Act." The offeror shall list as other foreign end products those end products manufactured in the United States that do not qualify as domestic end products, i.e., an end product that is not a COTS item and does not meet the component test in paragraph (2) of the definition of “domestic end product.”

Other Foreign End Products:

Line Item No.	Country of Origin
_____	_____
_____	_____
_____	_____

[List as necessary]

(iv) The Government will evaluate offers in accordance with the policies and procedures of FAR Part 25.
(2) *Buy American Act-Free Trade Agreements-Israeli Trade Act Certificate, Alternate I (Jan 2004)*. If Alternate I to the clause at FAR 52.225-3 is included in this solicitation, substitute the following paragraph (g)(1)(ii) for paragraph (g)(1)(ii) of the basic provision:

(g)(1)(ii) The offeror certifies that the following supplies are Canadian end products as defined in the clause of this solicitation entitled "Buy American Act-Free Trade Agreements-Israeli Trade Act":

Canadian End Products:

Line Item No.
_____
_____
_____

[List as necessary]

(3) Buy American Act-Free Trade Agreements-Israeli Trade Act Certificate, Alternate II (Jan 2004). If Alternate II to the clause at FAR 52.225-3 is included in this solicitation, substitute the following paragraph (g)(1)(ii) for paragraph (g)(1)(ii) of the basic provision:

(g)(1)(ii) The offeror certifies that the following supplies are Canadian end products or Israeli end products as defined in the clause of this solicitation entitled "Buy American Act-Free Trade Agreements-Israeli Trade Act":

Canadian or Israeli End Products:

Line Item No.	**Country of Origin**
_____	_____
_____	_____
_____	_____

[List as necessary]

(4) Trade Agreements Certificate. (Applies only if the clause at FAR 52.225-5, Trade Agreements, is included in this solicitation.)

(i) The offeror certifies that each end product, except those listed in paragraph (g)(4)(ii) of this provision, is a U.S.-made or designated country end product, as defined in the clause of this solicitation entitled "Trade Agreements."

(ii) The offeror shall list as other end products those end products that are not U.S.-made or designated country end products.

Other End Products:

Line Item No.	Country of Origin
_____	_____
_____	_____
_____	_____

(List as necessary)

(iii) The Government will evaluate offers in accordance with the policies and procedures of FAR Part 25. For line items covered by the WTO GPA, the Government will evaluate offers of U.S.-made or designated country end products without regard to the restrictions of the Buy American Act. The Government will consider for award only offers of U.S.-made or designated country end products unless the Contracting Officer determines that there are no offers for such products or that the offers for such products are insufficient to fulfill the requirements of the solicitation.

(h) Certification Regarding Responsibility Matters (Executive Order 12689). The offeror certifies, to the best of its knowledge and belief, that --

(1) The offeror and/or any of its principals ( ) are, ( ) are not presently debarred, suspended, proposed for debarment, or declared ineligible for the award of contracts by any Federal agency,

(2) ( ) Have, ( ) have not, within a three-year period preceding this offer, been convicted of or had a civil judgment rendered against them for: commission of fraud or a criminal offense in connection with obtaining, attempting to obtain, or performing a Federal, state or local government contract or subcontract; violation of Federal or state antitrust statutes relating to the submission of offers; or commission of embezzlement, theft, forgery, bribery, falsification or destruction of records, making false statements, tax evasion, violating Federal criminal tax laws, or receiving stolen property; and

(3) ( ) are, ( ) are not presently indicted for, or otherwise criminally or civilly charged by a Government entity with, commission of any of these offenses enumerated in paragraph (h)(2) of this clause; and

(4) ( ) Have, ( ) have not, within a three-year period preceding this offer, been notified of any delinquent Federal taxes in an amount that exceeds $3,000 for which the liability remains unsatisfied.

(i) Taxes are considered delinquent if both of the following criteria apply:

(A) The tax liability is finally determined. The liability is finally determined if it has been assessed. A liability is not finally determined if there is a pending administrative or judicial challenge. In the case of a judicial challenge to the liability, the liability is not finally determined until all judicial appeal rights have been exhausted.

(B) The taxpayer is delinquent in making payment. A taxpayer is delinquent if the taxpayer has failed to pay the tax liability when full payment was due and required. A taxpayer is not delinquent in cases where enforced collection action is precluded.

(ii) Examples.

(A) The taxpayer has received a statutory notice of deficiency, under I.R.C. Sec. 6212, which entitles the taxpayer to seek Tax Court review of a proposed tax deficiency. This is not a delinquent tax because it is not a final tax liability. Should the taxpayer seek Tax Court review, this will not be a final tax liability until the taxpayer has exercised all judicial appeal rights.

(B) The IRS has filed a notice of Federal tax lien with respect to an assessed tax liability, and the taxpayer has been issued a notice under I.R.C. Sec. 6320 entitling the taxpayer to request a hearing with the IRS Office of Appeals contesting the lien filing, and to further appeal to the Tax Court if the IRS determines to sustain the lien filing. In the course of the hearing, the taxpayer is entitled to contest the underlying tax liability because the taxpayer has had no prior opportunity to contest the liability. This is not a delinquent tax because it is not a final tax liability. Should the taxpayer seek tax court review, this will not be a final tax liability until the taxpayer has exercised all judicial appeal rights.

(C) The taxpayer has entered into an installment agreement pursuant to I.R.C. Sec. 6159. The taxpayer is making timely payments and is in full compliance with the agreement terms. The taxpayer is not delinquent because the taxpayer is not currently required to make full payment.

(D) The taxpayer has filed for bankruptcy protection. The taxpayer is not delinquent because enforced collection action is stayed under 11 U.S.C. 362 (the Bankruptcy Code).

(i) Certification Regarding Knowledge of Child Labor for Listed End Products (Executive Order 13126). (The Contracting Officer must list in paragraph (i)(1) any end products being acquired under this solicitation that are included in the List of Products Requiring Contractor Certification as to Forced or Indentured Child Labor, unless excluded at 22.1503(b).)

(1) Listed End Product

Listed End Product	Listed Countries of Origin:

(2) Certification. (If the Contracting Officer has identified end products and countries of origin in paragraph (i)(1) of this provision, then the offeror must certify to either (i)(2)(i) or (i)(2)(ii) by checking the appropriate block.)

( )(i) The offeror will not supply any end product listed in paragraph (i)(1) of this provision that was mined, produced, or manufactured in the corresponding country as listed for that product.

( ) (ii) The offeror may supply an end product listed in paragraph (i)(1) of this provision that was mined, produced, or manufactured in the corresponding country as listed for that product. The offeror certifies that is has made a good faith effort to determine whether forced or indentured child labor was used to mine, produce, or manufacture any such end product furnished under this contract. On the basis of those efforts, the offeror certifies that it is not aware of any such use of child labor.

(j) Place of manufacture. (Does not apply unless the solicitation is predominantly for the acquisition of manufactured end products.) For statistical purposes only, the offeror shall indicate whether the place of manufacture of the end products it expects to provide in response to this solicitation is predominantly--

(1) ( ) In the United States (Check this box if the total anticipated price of offered end products manufactured in the United States exceeds the total anticipated price of offered end products manufactured outside the United States); or

(2) ( ) Outside the United States.

(k) Certificates regarding exemptions from the application of the Service Contract Act. (Certification by the offeror as to its compliance with respect to the contract also constitutes its certification as to compliance by its subcontractor if it subcontracts out the exempt services.) (The contracting officer is to check a box to indicate if paragraph (k)(1) or (k)(2) applies.)

( ) (1) Maintenance, calibration, or repair of certain equipment as described in FAR 22.1003-4(c)(1). The offeror ( ) does ( ) does not certify that--

(i) The items of equipment to be serviced under this contract are used regularly for other than Governmental purposes and are sold or traded by the offeror in substantial quantities to the general public in the course of normal business operations;

(ii) The services will be furnished at prices which are, or are based on, established catalog or market prices (see FAR 22.1003-4(c)(2)(ii)) for the maintenance, calibration, or repair of such equipment; and

(iii) The compensation (wage and fringe benefits) plan for all service employees performing work under the contract will be the same as that used for these employees and equivalent employees servicing the same equipment of commercial customers.

( ) (2) Certain services as described in FAR 22.1003-4(d)(1). The offeror ( ) does ( ) does not certify that--

(i) The services under the contract are offered and sold regularly to non-Governmental customers, and are provided by the offeror (or subcontractor in the case of an exempt subcontract) to the general public in substantial quantities in the course of normal business operations;

(ii) The contract services will be furnished at prices that are, or are based on, established catalog or market prices (see FAR 22.1003-4(d)(2)(iii));

(iii) Each service employee who will perform the services under the contract will spend only a small portion of his or her time (a monthly average of less than 20 percent of the available hours on an annualized basis, or less than 20 percent of available hours during the contract period if the contract period is less than a month) servicing the Government contract; and

(iv) The compensation (wage and fringe benefits) plan for all service employees performing work under the contract is the same as that used for these employees and equivalent employees servicing commercial customers.

(3) If paragraph (k)(1) or (k)(2) of this clause applies--

(i) If the offeror does not certify to the conditions in paragraph (k)(1) or (k)(2) and the Contracting Officer did not attach a Service Contract Act wage determination to the solicitation, the offeror shall notify the Contracting Officer as soon as possible; and

(ii) The Contracting Officer may not make an award to the offeror if the offeror fails to execute the certification in paragraph (k)(1) or (k)(2) of this clause or to contact the Contracting Officer as required in paragraph (k)(3)(i) of this clause.

(l) Taxpayer Identification Number (TIN) (26 U.S.C. 6109, 31 U.S.C. 7701). (Not applicable if the offeror is required to provide this information to a central contractor registration database to be eligible for award.)

(1) All offerors must submit the information required in paragraphs (l)(3) through (l)(5) of this provision to comply with debt collection requirements of 31 U.S.C. 7701(c) and 3325(d), reporting requirements of 26 U.S.C. 6041, 6041A, and 6050M, and implementing regulations issued by the Internal Revenue Service (IRS).

(2) The TIN may be used by the Government to collect and report on any delinquent amounts arising out of the offeror's relationship with the Government (31 U.S.C. 7701(c)(3)). If the resulting contract is subject to the payment reporting requirements described in FAR 4.904, the TIN provided hereunder may be matched with IRS records to verify the accuracy of the offeror's TIN.

(3) Taxpayer Identification Number (TIN).

( ) TIN: ----------.

( ) TIN has been applied for.

( ) TIN is not required because:

( ) Offeror is a nonresident alien, foreign corporation, or foreign partnership that does not have income effectively connected with the conduct of a trade or business in the United States and does not have an office or place of business or a fiscal paying agent in the United States;

( ) Offeror is an agency or instrumentality of a foreign government;

( ) Offeror is an agency or instrumentality of the Federal Government.

(4) Type of organization.

( ) Sole proprietorship;

( ) Partnership;

( ) Corporate entity (not tax-exempt);

( ) Corporate entity (tax-exempt);

( ) Government entity (Federal, State, or local);

( ) Foreign government;

( ) International organization per 26 CFR 1.6049-4;

( ) Other ----------.

(5) Common parent.

( ) Offeror is not owned or controlled by a common parent;

( ) Name and TIN of common parent:

Name ----------.
TIN ----------.

(m) Restricted business operations in Sudan. By submission of its offer, the offeror certifies that the offeror does not conduct any restricted business operations in Sudan.

(n) Prohibition on Contracting with Inverted Domestic Corporations.

(1) Relation to Internal Revenue Code. A foreign entity that is treated as an inverted domestic corporation for purposes of the Internal Revenue Code at 26 U.S.C. 7874 (or would be except that the inversion transactions were completed on or before March 4, 2003), is also an inverted domestic corporation for purposes of 6 U.S.C. 395 and for this solicitation provision (see FAR 9.108).

(2) Representation. By submission of its offer, the offeror represents that it is not an inverted domestic corporation and is not a subsidiary of one.

(End of provision)

52.212-5 CONTRACT TERMS AND CONDITIONS REQUIRED TO IMPLEMENT STATUTES OR EXECUTIVE ORDERS--COMMERCIAL ITEMS (SEP 2009)

(a) The Contractor shall comply with the following Federal Acquisition Regulation (FAR) clauses, which are incorporated in this contract by reference, to implement provisions of law or Executive orders applicable to acquisitions of commercial items:

(1) 52.222-50, Combating Trafficking in Persons (FEB 2009) (22 U.S.C. 7104(g)).

Alternate I (Aug 2007) of 52.222-50 (22 U.S.C. 7104(g)).

(2) 52.233-3, Protest After Award (AUG 1996) (31 U.S.C. 3553).

(3) 52.233-4, Applicable Law for Breach of Contract Claim (OCT 2004) (Pub. L. 108-77, 108-78).

(b) The Contractor shall comply with the FAR clauses in this paragraph (b) that the Contracting Officer has indicated as being incorporated in this contract by reference to implement provisions of law or Executive orders applicable to acquisitions of commercial items: (Contracting Officer check as appropriate.)

_X__ (1) 52.203-6, Restrictions on Subcontractor Sales to the Government (SEP 2006), with Alternate I (OCT 1995) (41 U.S.C. 253g and 10 U.S.C. 2402).

___ (2) 52.203-13, Contractor Code of Business Ethics and Conduct (DEC 2008)(Pub. L. 110-252, Title VI, Chapter 1 (41 U.S.C. 251 note)).

___ (3) 52.203-15, Whistleblower Protections under the American Recovery and Reinvestment Act of 2009 (MAR 2009) (Section 1553 of Pub. L. 111-5). (Applies to contracts funded by the American Recovery and Reinvestment Act of 2009.)

__(4) 52.204-11, American Recovery and Reinvestment Act—Reporting Requirements (MAR 2009) (Pub. L. 111-5).

___ (5) 52.219-3, Notice of Total HUBZone Set-Aside (Jan 1999) (15 U.S.C. 657a).

___ (6) 52.219-4, Notice of Price Evaluation Preference for HUBZone Small Business Concerns (JUL 2005) (if the offeror elects to waive the preference, it shall so indicate in its offer) (15 U.S.C. 657a).

___ (7) [Reserved].

___ (8)(i) 52.219-6, Notice of Total Small Business Set-Aside (JUNE 2003) (15 U.S.C. 644).

___ (ii) Alternate I (OCT 1995) of 52.219-6.

___ (iii) Alternate II (MAR 2004) of 52.219-6.

___ (9)(i) 52.219-7, Notice of Partial Small Business Set-Aside (JUNE 2003) (15 U.S.C. 644).

___ (ii) Alternate I (OCT 1995) of 52.219-7.

___ (iii) Alternate II (MAR 2004) of 52.219-7.

___ (10) 52.219-8, Utilization of Small Business Concerns (MAY 2004) (15 U.S.C. 637 (d)(2) and (3)).

___ (11)(i) 52.219-9, Small Business Subcontracting Plan (APR 2008) (15 U.S.C. 637(d)(4)).

___ (ii) Alternate I (OCT 2001) of 52.219-9

___ (iii) Alternate II (OCT 2001) of 52.219-9.

___ (12) 52.219-14, Limitations on Subcontracting (DEC 1996) (15 U.S.C. 637(a)(14)).

___ (13) 52.219-16, Liquidated Damages--Subcontracting Plan (JAN 1999) (15 U.S.C. 637(d)(4)(F)(i)).

___ (14)(i) 52.219-23, Notice of Price Evaluation Adjustment for Small Disadvantaged Business Concerns (OCT 2008) (10 U.S.C. 2323) (if the offeror elects to waive the adjustment, it shall so indicate in its offer).

___ (ii) Alternate I (JUNE 2003) of 52.219-23.

___ (15) 52.219-25, Small Disadvantaged Business Participation Program--Disadvantaged Status and Reporting (APR 2008) (Pub. L. 103-355, section 7102, and 10 U.S.C. 2323).

___ (16) 52.219-26, Small Disadvantaged Business Participation Program--Incentive Subcontracting (OCT 2000) (Pub. L. 103-355, section 7102, and 10 U.S.C. 2323).

___ (17) 52.219-27, Notice of Total Service-Disabled Veteran-Owned Small Business Set-Aside (MAY 2004) (U.S.C. 657 f).

___ (18) 52.219-28, Post Award Small Business Program Rerepresentation (APR 2009) (15 U.S.C. 632(a)(2)).

___ (19) 52.222-3, Convict Labor (JUNE 2003) (E.O. 11755).

_X__ (20) 52.222-19, Child Labor--Cooperation with Authorities and Remedies (AUG 2009) (E.O. 13126).

___ (21) 52.222-21, Prohibition of Segregated Facilities (FEB 1999).

___ (22) 52.222-26, Equal Opportunity (MAR 2007) (E.O. 11246).

___ (23) 52.222-35, Equal Opportunity for Special Disabled Veterans, Veterans of theVietnam Era, and Other Eligible Veterans (SEP 2006) (38 U.S.C. 4212).

___ (24) 52.222-36, Affirmative Action for Workers with Disabilities (JUN 1998) (29 U.S.C. 793).

___ (25) 52.222-37, Employment Reports on Special Disabled Veterans, Veterans of the Vietnam Era, and Other Eligible Veterans (SEP 2006) (38 U.S.C. 4212).

___ (26) 52.222-39, Notification of Employee Rights Concerning Payment of Union Dues or Fees (DEC 2004) (E.O. 13201).

___ (27) 52.222-54, Employment Eligibility Verification (JAN 2009). (Executive Order 12989). (Not applicable to the acquisition of commercially available off-the-shelf items or certain other types of commercial items as prescribed in 22.1803.)

___ (28)(i) 52.223-9, Estimate of Percentage of Recovered Material Content for EPA-Designated Items (MAY 2008) (42 U.S.C. 6962(c)(3)(A)(ii)). (Not applicable to the acquisition of commercially available off-the-shelf items.)

___ (ii) Alternate I (MAY 2008) of 52.223-9 (42 U.S.C. 6962(i)(2)(c)). (Not applicable to the acquisition of commercially available off-the-shelf items.)

___ (29) 52.223-15, Energy Efficiency in Energy-Consuming Products (DEC 2007) (42 U.S.C. 8259b) .

___ (30)(i) 52.223-16, IEEE 1680 Standard for the Environmental Assessment of Personal Computer Products (DEC 2007) (E.O. 13423).

___ (ii) Alternate I (DEC 2007) of 52.223-16.

___ (31) 52.225-1, Buy American Act--Supplies (JUNE 2003) (41 U.S.C. 10a-10d).

___ (32)(i) 52.225-3, Buy American Act--Free Trade Agreements--Israeli Trade Act (JUN 2009) (41 U.S.C. 10a-10d, 19 U.S.C. 3301 note, 19 U.S.C. 2112 note, 19 U.S.C. 3805 note, Pub. L. 108-77, 108-78, 108-286, 108-302, 109-53, 109-169, 109-283, and 110-138).

___ (ii) Alternate I (JAN 2004) of 52.225-3.

___ (iii) Alternate II (JAN 2004) of 52.225-3.

___ (33) 52.225-5, Trade Agreements (AUG 2009) (19 U.S.C. 2501, et seq., 19 U.S.C. 3301 note).

_X__ (34) 52.225-13, Restrictions on Certain Foreign Purchases (JUN 2008) (E.O.'s, proclamations, and statutes administered by the Office of Foreign Assets Control of the Department of the Treasury).

___ (35) 52.226-4, Notice of Disaster or Emergency Area Set-Aside (Nov 2007) (42 U.S.C. 5150).

___ (36) 52.226-5, Restrictions on Subcontracting Outside Disaster or Emergency Area (Nov 2007) (42 U.S.C. 5150).

___ (37) 52.232-29, Terms for Financing of Purchases of Commercial Items (FEB 2002) (41 U.S.C. 255(f), 10 U.S.C. 2307(f))

___ (38) 52.232-30, Installment Payments for Commercial Items (OCT 1995) (41 U.S.C. 255(f), 10 U.S.C. 2307(f)).

___ (39) 52.232-33, Payment by Electronic Funds Transfer--Central Contractor Registration (OCT 2003) (31 U.S.C. 3332).

_X__ (40) 52.232-34, Payment by Electronic Funds Transfer--Other than Central Contractor Registration (MAY 1999) (31 U.S.C. 3332)

___ (41) 52.232-36, Payment by Third Party (MAY 1999) (31 U.S.C. 3332).

___ (42) 52.239-1, Privacy or Security Safeguards (AUG 1996) (5 U.S.C. 552a).

___ (43)(i) 52.247-64, Preference for Privately Owned U.S.-Flag Commercial Vessels (FEB 2006) (46 U.S.C. Appx 1241(b) and 10 U.S.C. 2631).

____ (ii) Alternate I (APR 2003) of 52.247-64.

(c) The Contractor shall comply with the FAR clauses in this paragraph (c), applicable to commercial services, that the Contracting Officer has indicated as being incorporated in this contract by reference to implement provisions of law or Executive orders applicable to acquisitions of commercial items: (Contracting Officer check as appropriate.)

____ (1) 52.222-41, Service Contract Act of 1965 (Nov 2007) (41 U.S.C. 351, et seq.).

____ (2) 52.222-42, Statement of Equivalent Rates for Federal Hires (MAY 1989) (29 U.S.C. 206 and 41 U.S.C. 351, et seq.).

____ (3) 52.222-43, Fair Labor Standards Act and Service Contract Act--Price Adjustment (Multiple Year and Option Contracts) (SEP 2009) (29 U.S.C. 206 and 41 U.S.C. 351, et seq.).

____ (4) 52.222-44, Fair Labor Standards Act and Service Contract Act--Price Adjustment (SEP 2009) (29 U.S.C. 206 and 41 U.S.C. 351, et seq.)

____ (5) 52.222-51, Exemption from Application of the Service Contract Act to Contracts for Maintenance, Calibration, or Repair of Certain Equipment--Requirements (Nov 2007) (41 U.S.C. 351, et seq.).

____ (6) 52.222-53, Exemption from Application of the Service Contract Act to Contracts for Certain Services--Requirements (FEB 2009) (41 U.S.C. 351, et seq.).

____ (7) 52.226-6, Promoting Excess Food Donation to Nonprofit Organizations (Mar 2009) (Pub. L. 110-247).

____ (8) 52.237-11, Accepting and Dispensing of $1 Coin (SEP 2008)(31 U.S.C. 5112(p)(1)).

(d) Comptroller General Examination of Record. The Contractor shall comply with the provisions of this paragraph (d) if this contract was awarded using other than sealed bid, is in excess of the simplified acquisition threshold, and does not contain the clause at 52.215-2, Audit and Records--Negotiation.

(1) The Comptroller General of the United States, or an authorized representative of the Comptroller General, shall have access to and right to examine any of the Contractor's directly pertinent records involving transactions related to this contract.

(2) The Contractor shall make available at its offices at all reasonable times the records, materials, and other evidence for examination, audit, or reproduction, until 3 years after final payment under this contract or for any shorter period specified in FAR Subpart 4.7, Contractor Records Retention, of the other clauses of this contract. If this contract is completely or partially terminated, the records relating to the work terminated shall be made available for 3 years after any resulting final termination settlement. Records relating to appeals under the disputes clause or to litigation or the settlement of claims arising under or relating to this contract shall be made available until such appeals, litigation, or claims are finally resolved.

(3) As used in this clause, records include books, documents, accounting procedures and practices, and other data, regardless of type and regardless of form. This does not require the Contractor to create or maintain any record that the Contractor does not maintain in the ordinary course of business or pursuant to a provision of law.

(e) (1) Notwithstanding the requirements of the clauses in paragraphs (a), (b), (c), and (d) of this clause, the Contractor is not required to flow down any FAR clause, other than those in this paragraph (e)(1)in a subcontract for commercial items. Unless otherwise indicated below, the extent of the flow down shall be as required by the clause—

(i) 52.203-13, Contractor Code of Business Ethics and Conduct (DEC 2008) (Pub. L. 110-252, Title VI, Chapter 1 (41 U.S.C. 251 note).

(ii) 52.219-8, Utilization of Small Business Concerns (May 2004) (15 U.S.C. 637(d)(2) and (3)), in all subcontracts that offer further subcontracting opportunities. If the subcontract (except subcontracts to small business concerns) exceeds $550,000 ($1,000,000 for construction of any public facility), the subcontractor must include 52.219-8 in lower tier subcontracts that offer subcontracting opportunities.

(iii) Reserved.

(iv) 52.222-26, Equal Opportunity (MAR 2007) (E.O. 11246).

(v) 52.222-35, Equal Opportunity for Special Disabled Veterans, Veterans of the Vietnam Era, and Other Eligible Veterans (SEP 2006) (38 U.S.C. 4212).

(vi) 52.222-36, Affirmative Action for Workers with Disabilities (June 1998) (29 U.S.C. 793).

(vii) 52.222-39, Notification of Employee Rights Concerning Payment of Union Dues or Fees (DEC 2004) (E.O. 13201).

(viii) 52.222-41, Service Contract Act of 1965 (Nov 2007) (41 U.S.C. 351, et seq.).

(ix) 52.222-50, Combating Trafficking in Persons (FEB 2009) (22 U.S.C. 7104(g)).

Alternate I (AUG 2007) of 52.222-50 (22 U.S.C. 7104(g)).

(x) 52.222-51, Exemption from Application of the Service Contract Act to Contracts for Maintenance, Calibration, or Repair of Certain Equipment--Requirements (Nov 2007) (41 U.S.C. 351, et seq.).

(xi) 52.222-53, Exemption from Application of the Service Contract Act to Contracts for Certain Services--Requirements (FEB 2009) (41 U.S.C. 351, et seq.).

(xii) 52.222-54, Employment Eligibility Verification (JAN 2009).

(xiii) 52.226-6, Promoting Excess Food Donation to Nonprofit Organizations. (MAR 2009) (Pub. L. 110-247). Flow down required in accordance with paragraph (e) of FAR clause 52.226-6.

(xiv) 52.247-64, Preference for Privately Owned U.S.-Flag Commercial Vessels (FEB 2006) (46 U.S.C. Appx 1241(b) and 10 U.S.C. 2631). Flow down required in accordance with paragraph (d) of FAR clause 52.247-64.

(2) While not required, the contractor May include in its subcontracts for commercial items a minimal number of additional clauses necessary to satisfy its contractual obligations.

(End of clause)

52.225-17 EVALUATION OF FOREIGN CURRENCY OFFERS (FEB 2000)

If the Government receives offers in more than one currency, the Government will evaluate offers by converting the foreign currency to United States currency using the official exchange rate in effect as follows:

(a) For acquisitions conducted using sealed bidding procedures, on the date of bid opening.

(b) For acquisitions conducted using negotiation procedures--

(1) On the date specified for receipt of offers, if award is based on initial offers; otherwise

(2) On the date specified for receipt of proposal revisions.

(End of provision)

52.233-2 SERVICE OF PROTEST (SEP 2006)

(a) Protests, as defined in section 33.101 of the Federal Acquisition Regulation, that are filed directly with an agency, and copies of any protests that are filed with the Government Accountability Office (GAO), shall be served on the Contracting Officer (addressed as follows) by obtaining written and dated acknowledgment of receipt from

Regional Contracting Office – bogota
US Embassy – Bogota
MILGP Unit 5140
APO AA 34038-5140

(b) The copy of any protest shall be received in the office designated above within one day of filing a protest with the GAO.

(End of provision)

52.252-1 SOLICITATION PROVISIONS INCORPORATED BY REFERENCE (FEB 1998)

This solicitation incorporates one or more solicitation provisions by reference, with the same force and effect as if they were given in full text. Upon request, the Contracting Officer will make their full text available. The offeror is cautioned that the listed provisions may include blocks that must be completed by the offeror and submitted with its quotation or offer. In lieu of submitting the full text of those provisions, the offeror may identify the provision by paragraph identifier and provide the appropriate information with its quotation or offer. Also, the full text of a solicitation provision may be accessed electronically at this/these address(es):

WWW.ARNETGOV/FAR

(End of provision

52.252-2 CLAUSES INCORPORATED BY REFERENCE (FEB 1998)

This contract incorporates one or more clauses by reference, with the same force and effect as if they were given in full text. Upon request, the Contracting Officer will make their full text available. Also, the full text of a clause may be accessed electronically at this/these address(es):

www.arnetgov/far

(End of clause)

252.212-7000 OFFEROR REPRESENTATIONS AND CERTIFICATIONS- COMMERCIAL ITEMS. (JUN 2005)

(a) Definitions.

As used in this clause-

(1) Foreign person means any person other than a United States person as defined in Section 16(2) of the Export Administration Act of 1979 (50 U.S.C. App. Sec. 2415).

(2) United States means the 50 States, the District of Columbia, outlying areas, and the outer Continental Shelf as defined in 43 U.S.C. 1331.

(3) United States person is defined in Section 16(2) of the Export Administration Act of 1979 and means any United States resident or national (other than an individual resident outside the United States and employed by other than a United States person), any domestic concern (including any permanent domestic establishment of any foreign concern), and any foreign subsidiary or affiliate (including any permanent foreign establishment) of any domestic concern which is controlled in fact by such domestic concern, as determined under regulations of the President.

(b) Certification.

By submitting this offer, the Offeror, if a foreign person, company or entity, certifies that it -

(1) Does not comply with the Secondary Arab Boycott of Israel; and

(2) Is not taking or knowingly agreeing to take any action, with respect to the Secondary Boycott of Israel by Arab countries, which 50 U.S.C. App. Sec. 2407(a) prohibits a United States person from taking.

(c) Representation of Extent of Transportation by Sea. (This representation does not apply to solicitations for the direct purchase of ocean transportation services).

(1) The Offeror shall indicate by checking the appropriate blank in paragraph (c)(2) of this provision whether transportation of supplies by sea is anticipated under the resultant contract. The term "supplies" is defined in the Transportation of Supplies by Sea clause of this solicitation.

(2) Representation.

The Offeror represents that it-

___Does anticipate that supplies will be transported by sea in the performance of any contract or subcontract resulting from this solicitation.

___Does not anticipate that supplies will be transported by sea in the performance of any contract or subcontract resulting from this solicitation.

(3) Any contract resulting from this solicitation will include the Transportation of Supplies by Sea Clause. If the Offeror represents that it will not use ocean transportation, the resulting contract will also include the Defense Federal Acquisition Regulation Supplement clause at 252.247-7024, Notification of Transportation of Supplies by Sea.

(End of provision)

252.212-7001 CONTRACT TERMS AND CONDITIONS REQUIRED TO IMPLEMENT STATUTES OR EXECUTIVE ORDERS APPLICABLE TO DEFENSE ACQUISITIONS OF COMMERCIAL ITEMS (JUN 2010)

(a) The Contractor agrees to comply with the following Federal Acquisition Regulation (FAR) clause which, if checked, is included in this contract by reference to implement a provision of law applicable to acquisitions of commercial items or components.

_X__ 52.203-3, Gratuities (APR 1984) (10 U.S.C. 2207).

(b) The Contractor agrees to comply with any clause that is checked on the following list of Defense FAR Supplement clauses which, if checked, is included in this contract by reference to implement provisions of law or Executive orders applicable to acquisitions of commercial items or components.

(1) _X__252.203-7000, Requirements Relating to Compensation of Former DoD Officials (JAN 2009) (Section 847 of Pub. L. 110-181).

(2) ___ 252.205-7000, Provision of Information to Cooperative Agreement Holders (DEC 1991) (10 U.S.C. 2416).

(3) ___ 252.219-7003, Small Business Subcontracting Plan (DoD Contracts) (APR 2007) (15 U.S.C. 637).

(4) ___ 252.219-7004, Small Business Subcontracting Plan (Test Program) (AUG 2008) (15 U.S.C. 637 note).

(5) ___ 252.225-7001, Buy American Act and Balance of Payments Program (JAN 2009) (41 U.S.C. 10a-10d, E.O. 10582).

(6) ____ 252.225-7008, Restriction on Acquisition of Specialty Metals (JUL 2009) (10 U.S.C. 2533b).

(7) ____ 252.225-7009, Restriction on Acquisition of Certain Articles Containing Specialty Metals (JUL 2009) (10 U.S.C. 2533b).

(8) ____ 252.225-7012, Preference for Certain Domestic Commodities (JUN 2010) (10 U.S.C. 2533a).

(9) ____ 252.225-7015, Restriction on Acquisition of Hand or Measuring Tools (JUN 2005) (10 U.S.C. 2533a).

(10) ____ 252.225-7016, Restriction on Acquisition of Ball and Roller Bearings (MAR 2006) (Section 8065 of Public Law 107-117 and the same restriction in subsequent DoD appropriations acts).

(11))(i) ___ 252.225-7021, Trade Agreements (NOV 2009) (19 U.S.C. 2501-2518 and 19 U.S.C. 3301 note).

(ii) ___ Alternate I (SEP 2008)

(12) ____ 252.225-7027, Restriction on Contingent Fees for Foreign Military Sales (APR 2003) (22 U.S.C. 2779).

(13) ____ 252.225-7028, Exclusionary Policies and Practices of Foreign Governments (APR 2003) (22 U.S.C. 2755).

(14)(i) ____ 252.225-7036, Buy American Act--Free Trade Agreements--Balance of Payments Program (JUL 2009) (41 U.S.C. 10a-10d and 19 U.S.C. 3301 note).

(ii) ___ Alternate I (JUL 2009) of 252.225-7036.

(15) ____ 252.225-7038, Restriction on Acquisition of Air Circuit Breakers (JUN 2005) (10 U.S.C. 2534(a)(3)).

(16) ____ 252.226-7001, Utilization of Indian Organizations, Indian-Owned Economic Enterprises, and Native Hawaiian Small Business Concerns (SEP 2004) (Section 8021 of Public Law 107-248 and similar sections in subsequent DoD appropriations acts).

(17) ____ 252.227-7015, Technical Data--Commercial Items (NOV 1995) (10 U.S.C. 2320).

(18) ____ 252.227-7037, Validation of Restrictive Markings on Technical Data (SEP 1999) (10 U.S.C. 2321).

(19) _X___ 252.232-7003, Electronic Submission of Payment Requests and Receiving Reports (MAR 2008) (10 U.S.C. 2227).

(20) ____ 252.237-7019, Training for Contractor Personnel Interacting with Detainees (SEP 2006) (Section 1092 of Public Law 108-375).

(21) _X___ 252.243-7002, Requests for Equitable Adjustment (MAR 1998) (10 U.S.C. 2410).

(22)____ 252.247-7003, Pass-Through of Motor Carrier Fuel Surcharge Adjustment to the Cost Bearer (JUL 2009) (Section 884 of Public Law 110-417).

(23)(i) ____ 252.247-7023, Transportation of Supplies by Sea (MAY 2002) (10 U.S.C. 2631).

(ii) ____ Alternate I (MAR 2000) of 252.247-7023.

(iii) ____ Alternate II (MAR 2000) of 252.247-7023.

(iv) ____ Alternate III (MAY 2002) of 252.247-7023.

(24) ____ 252.247-7024, Notification of Transportation of Supplies by Sea (MAR 2000) (10 U.S.C. 2631).

(c) In addition to the clauses listed in paragraph (e) of the Contract Terms and Conditions Required to Implement Statutes or Executive Orders--Commercial Items clause of this contract (FAR 52.212-5), the Contractor shall include the terms of the following clauses, if applicable, in subcontracts for commercial items or commercial components, awarded at any tier under this contract:

(1) 252.237-7019, Training for Contractor Personnel Interacting with Detainees (SEP 2006) (Section 1092 of Public Law 108-375).

(2) 252.247-7003, Pass-Through of Motor Carrier Fuel Surcharge Adjustment to the Cost Bearer (JUL 2009) (Section 884 of Public Law 110-417).

(3) 252.247-7023, Transportation of Supplies by Sea (MAY 2002) (10 U.S.C. 2631).

(4) 252.247-7024, Notification of Transportation of Supplies by Sea (MAR 2000) (10 U.S.C. 2631).

(End of clause)

252.229-7001 TAX RELIEF (JUN 1997)

(a) Prices set forth in this contract are exclusive of all taxes and duties from which the United States Government is exempt by virtue of tax agreements between the United States Government and the Contractor's government. The following taxes or duties have been excluded from the contract price:

NAME OF TAX: (IVA) RATE (PERCENTAGE): (16%)

(b) The Contractor's invoice shall list separately the gross price, amount of tax deducted, and net price charged.

(c) When items manufactured to United States Government specifications are being acquired, the Contractor shall identify the materials or components intended to be imported in order to ensure that relief from import duties is obtained. If the Contractor intends to use imported products from inventories on hand, the price of which includes a factor for import duties, the Contractor shall ensure the United States Government's exemption from these taxes. The Contractor may obtain a refund of the import duties from its government or request the duty-free import of an amount of supplies or components corresponding to that used from inventory for this contract.

(End of clause)

SPECIFICATIONS

EQUIPMENT

ITEM	DESCRIPTION / ENGLISH	DESCRIPTION / SPANISH	REFERENCE	QT
1	Outboard motor F / B 350 HP (which can be cut to visualize the internal movement of equipment	Motor F / B 350 HP (el cual se pueda cortar para visualizar movimiento interior del equipo)	F350AETX	1
2	Outboard motor F / B 200 4T (which can be cut to visualize the internal movement of equipment)	Motor F / B 200 HP 4T (el cual se pueda cortar para visualizar movimiento interior del equipo)	F200B	1
3	Outboard motor F / B 200 2T (which can be cut to visualize the internal movement of equipment)	Motor F / B 200 HP 2T (el cual se pueda cortar para visualizar movimiento interior del equipo)	200AETX	1
4	Outboard motor control box	Caja de mando		1
5	Engine test tank outboard	Tanque de pruebas para motores fuera de borda	Bob Kerr's Marine or equivalent	1
6	Hood for motor gas extraction and isolution of noise test tank outboard motors	Campana para extraccion de gases del motor y aislamiento de ruido para tanque de pruebas motores fuera de borda.	Bob Kerr's Marine or equivalent	1
7	Eye wash station	Estacion para limpieza de ojos	G1814	3
8	Air compressor equipment (system with lines) REF. ACBLK6580V2)	Equipo compresor de aire (sistema con lineas)	REF. ACBLK6580V2	1
9	Bats parts washing (with wheels for transportation).	Batea de lavado de piezas (con llantas para transporte)		2
10	Engine trolley F / B 400 Kg hydraulic.	Carro de transporte para motores F / B Hidraulico de 400 Kg.	SD3	2

11	Base for assembly and disassembly of transmissions	Base para arme y desarme de trasmisiones	REF. 601-400 TR-2	2
12	Basis for assembly and disassembly of the head of force	Bases para arme y desarme de cabeza de fuerza.	1000-HD	2
13	Work bench grinder and hand press	Banco de trabajo con esmeril y prensa manual	CG471-1	2
14	Specialized tool for outboard motors (kit)	Herramienta especializada para motores fuera de borda Yamaha (kit)		1
15	Mechanical Tool	Herramienta mecanico	Ref. 9100GSBO	1
16	Acrylic board erasable 1.20 x 2.20	Tablero acrilico borrable 1.20 x 2.20		2
17	Complete kit tachometers indicatorsJuego completo indicadores	Juego completo indicadors tacometros		1

DRAWINGS

ELEMENTO	DESCRIPCIÓN
MOTOR F350	

MOTOR F200	
MOTOR 200AETX	

PALANCA DE CONTROL MOTORES FUERA DE BORDA	
TANQUE DE PRUEBAS	
ESTACIÓN PARA LIMPIEZA DE OJOS	

EQUIPO COMPRESOR DE AIRE (SISTEMA CON LÍNEAS)	
CARRO DE TRANSPORTE PARA MOTORES F/B HIDRÁULICO DE 400 KG.	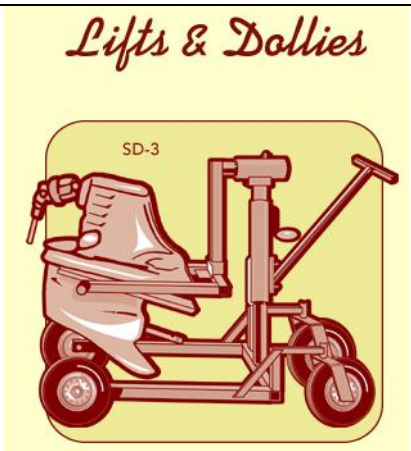
BASE PARA ARME Y DESARME DE TRANSMISIONES	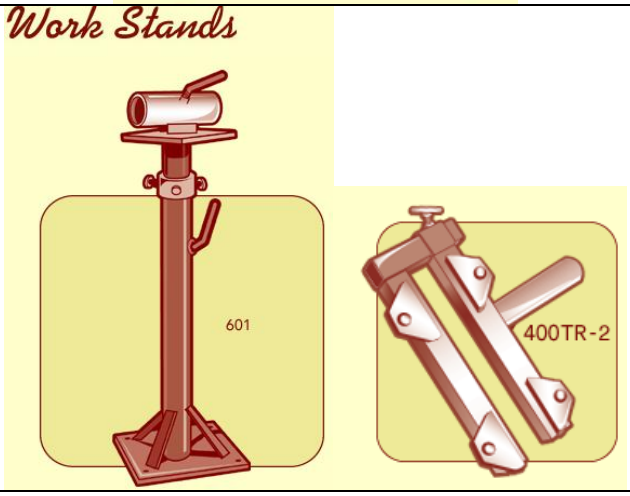

PUENTE GRÚA CAPACIDAD 1.5 T	
BASE PARA ARME Y DESARME DE CABEZA DE FUERZA	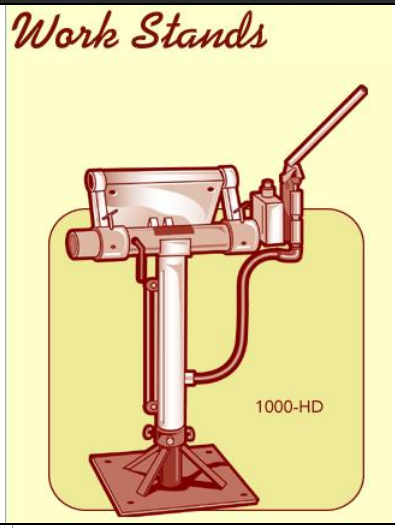
BANCO DE TRABAJO	

JUEGO DE INDICADORES PARA MOTOR FUERA DE BORDA	