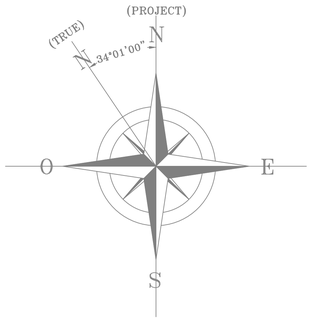

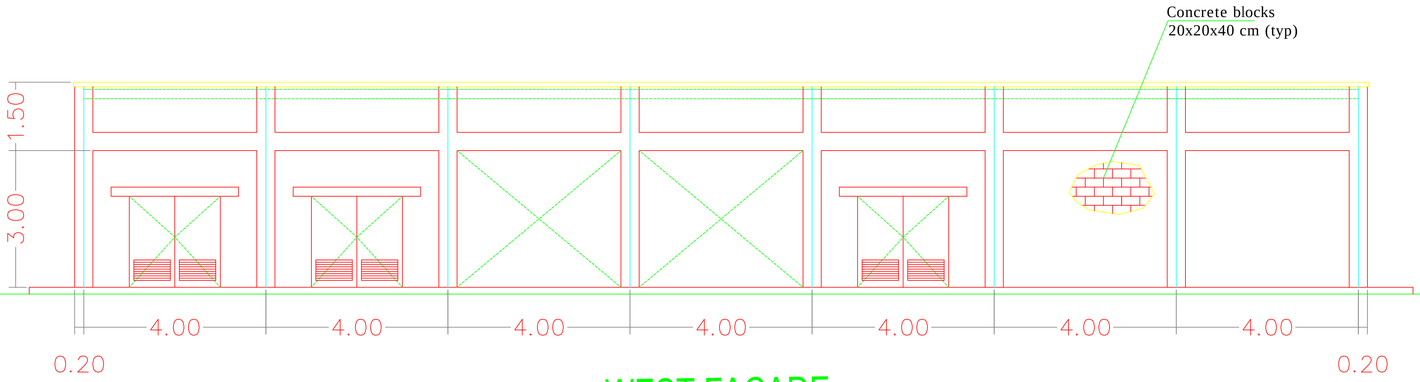

WEST FACADE

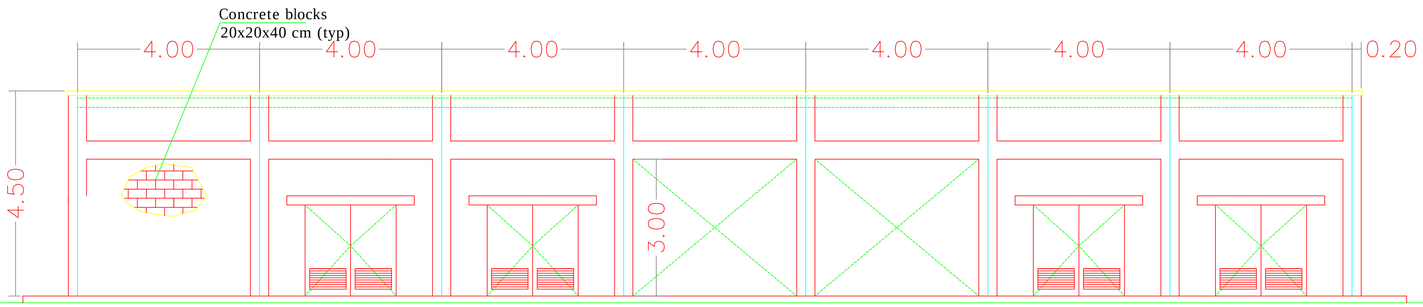

EAST FACADE

United States Department of State

U.S. EMBASSY
COMPOUND

BOGOTA, COLOMBIA

WARNING: This document is the property of the U.S. Government. Further reproduction and/ or distribution is prohibited without the express written permission of: OBO

Information on this document is not to be altered except with the written approval of the individual whose seal appears hereon.

PROJECT DESIGN / MANAGMENT

C.O.R:

ARCH./COTR:

CIVIL ENG.:
PROFESSIONAL I.D.:

PLANNING:

CIVIL:

ARCH.:

HYDRAULIC:

STRUCTURAL:

MECH./ ELEC.:

NOTES:

scale 1:750

Rev Number	Description	Date
10		
9		
8		
7		
6		
5		
4		
3		
2		
1		

Revisions

DESIGN PHASE FOR BIDDING

FBO/PE/PM | FBO/PE/BDE

Drawing Title

GREENHOUSE
West & East Facades

Drawing Name | Scale | Phase: ■ 30% ☐ 60% ☐ 90% ☐ 100% ☐ AS BUILT

Code: A-1

Date: JUL 2015

Drawn By: PEDRO BUENO

Checked By: HERNAN AGUIRRE

Project Number (Contract #)

Classification