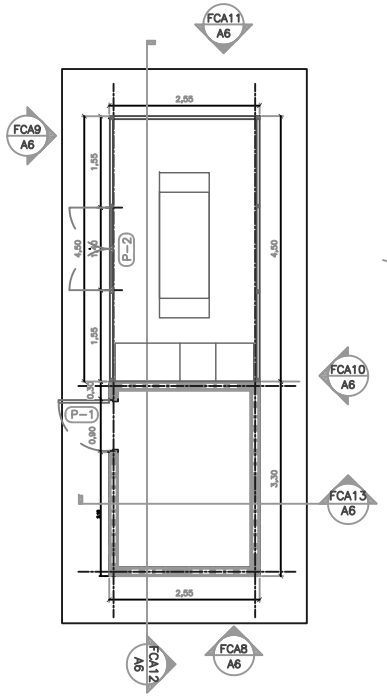

LAYOUT ELECTRICAL HOUSE
SCALE 1:50

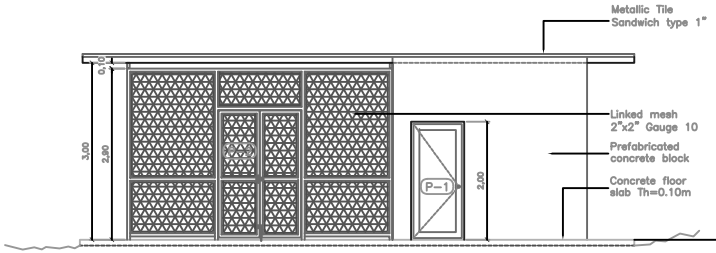

ELEVATION FCA09 A6
SCALE 1:50

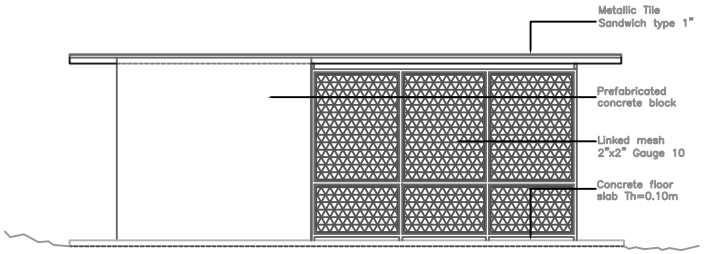

A6 ELEVATION FCA10
SCALE 1:50

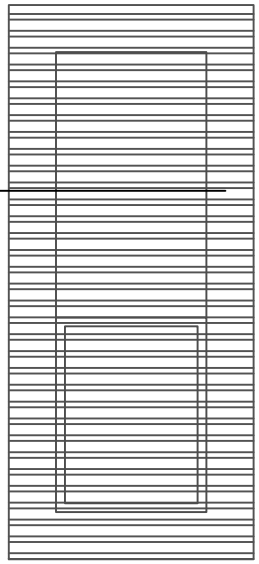

A6 ROOF PLAN
SCALE 1:50

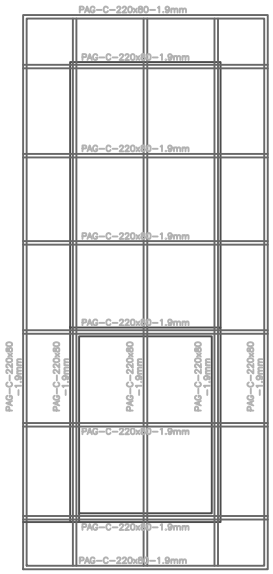

A6 ROOF STRUCTURAL LAYOUT
SCALE 1:50

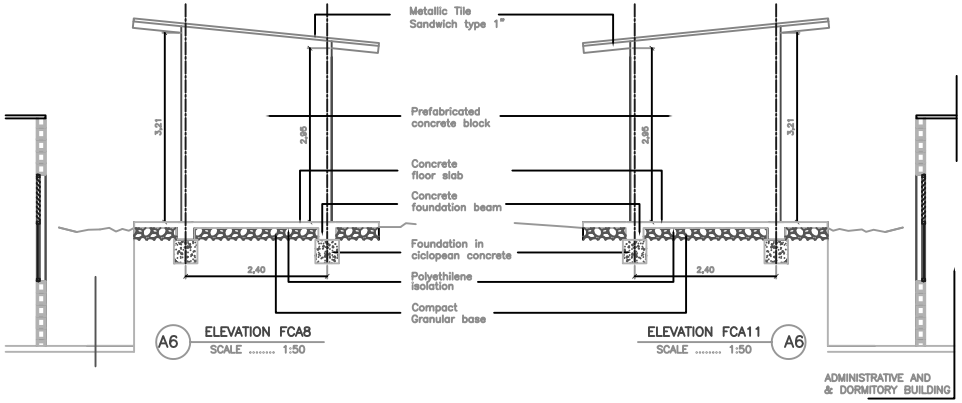

A6 ELEVATION FCA8
SCALE 1:50

ELEVATION FCA11 A6
SCALE 1:50

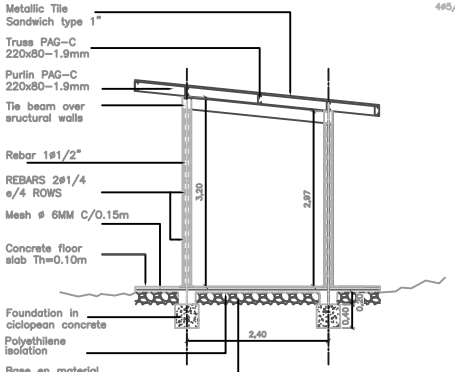

SECTION FCA13 A6
SCALE 1:50

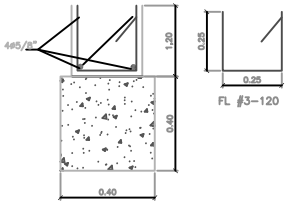

FOUNDATION BEAM
ON CICLOPEAN CONCRETE
SCALE 1:25

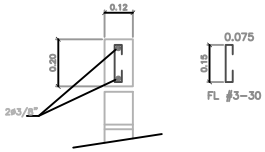

TIE BEAM
OVER STRUCTURAL WALL
SCALE 1:25

EMBASSY OF THE UNITED STATES
I.N.L. SECTION
BOGOTA , COLOMBIA

WARNING:
This document is the property of the U.S. Government. Further reproduction and/ or distribution is prohibited without the written permission of the I.N.L. Section Colombia.
Information on this document is not to be altered except with the written approval of this office.

SUPERVISED BY:
I.N.L.
INTERNATIONAL NARCOTICS AND LAW
ENFORCEMENT SECTION
EMBASSY OF THE UNITED STATES,
BOGOTA, COLOMBIA

COR: Iván Morales

PROJECT DESIGN / MANAGEMENT

FACILITIES FOR COUNTER NARCOTICS
POLICE

FLORIDA BLANCA - BUCARAMANGA

Contract/PO No.: | Contract/PO date:

Legenda/Remarks

General location

ALL UNITS IN METRIC SYSTEM

Revisions

Rev.No.	Description	Date
1	Included P2, Corrected Elev. 08-10	2014-08-04
2		
3		
4		
5		
6		
7		
8		
9		
10		

Phase: ☒35% ☐60% ☐90% ☐00% ☐AS BUILT

Drawing title:
ARCHITECTURAL
ELECTRICAL HOUSE

Drawing file: | Scale: 1:50

Code: A7

Drawing date: April 14, 2014
Designed by: Iván Camilo Cruz
Profession: Architect
Professional ID: 7670058544VLL
Signature: