COOPER Power Systems

Distribution Transformers

Three-Phase Padmounted Compartmental Type Installation and Maintenance Instructions

Service Information

S210-12-1

Figure 1.
Three-Phase Padmounted Transformer

Contents

Safety Information 2
Product Information 3
Introduction 3
Acceptance and Initial Inspection 3
Handling 3
Storage 3
Installation 4
Installation Location 4
Mounting the Transformer 4
Pre-Service Inspection (Exterior) 4
Pre-Service Inspection (Interior) 5
External Connections 6
Accessories 7
Liquid Level Gauge 7
Liquid Temperature Gauge 7
Pressure-Vacuum Gauge 8
Pressure Relief Device 8
Switches and Protective Devices 9
Bay-O-Net Fuse 9
Internal Cartridge Fuse 12
Internal Loadbreak Switches 13
Tap Changer 14
Dual-Voltage and Delta-Wye Switch 16
Vacuum Fault Interrupter (VFI) 17
Air Switches (Arc-Strangler®) 18
Surge Arresters 19
Maintenance 21
Exterior Maintenance 21
Cabinet Interior Maintenance 21
Tank Internal Maintenance 21
Tank Cover Removal and Installation 22
Bushing Removal and Replacement 24
Cabinet Removal and Installation 24
Insulating Liquid Maintenance 25
Applicable Standards 27
Spare Parts and Service 27

These instructions do not claim to cover all details or variations in the equipment, procedure, or process described, nor to provide directions for meeting every possible contingency during installation, operation or maintenance. When additional information is desired to satisfy a circumstance not covered sufficiently for the user's purpose, please contact your Cooper Power Systems representative.

February 2001 • Supersedes 1/90 • © 2001 Cooper Power Systems, Inc.
Printed in U.S.A.

SAFETY FOR LIFE

Cooper Power Systems products meet or exceed all applicable industry standards relating to product safety. We actively promote safe practices in the use and maintenance of our products through our service literature, instructional training programs, and the continuous efforts of all Cooper Power Systems employees involved in product design, manufacture, marketing, and service.

We strongly urge that you always follow all locally approved safety procedures and safety instructions when working around high voltage lines and equipment, and support our “Safety For Life” mission.

SAFETY INFORMATION

The instructions in this manual are not intended as a substitute for proper training or adequate experience in the safe operation of the equipment described. Only competent technicians who are familiar with this equipment should install, operate, and service it.

A competent technician has these qualifications:

- *Is thoroughly familiar with these instructions.*
- *Is trained in industry-accepted high and low-voltage safe operating practices and procedures.*
- *Is trained and authorized to energize, de-energize, clear, and ground power distribution equipment.*
- *Is trained in the care and use of protective equipment such as flash clothing, safety glasses, face shield, hard hat, rubber gloves, hotstick, etc.*

Following is important safety information. For safe installation and operation of this equipment, be sure to read and understand all cautions and warnings.

Hazard Statement Definitions

This manual may contain these four types of hazard statements:

DANGER: Indicates an imminently hazardous situation which, if not avoided, will result in death or serious injury.

WARNING: Indicates a potentially hazardous situation which, if not avoided, could result in death or serious injury.

CAUTION: Indicates a potentially hazardous situation which, if not avoided, may result in minor or moderate injury.

CAUTION: Indicates a potentially hazardous situation which, if not avoided, may result in equipment damage only.

Safety Instructions

Following are general caution and warning statements that apply to this equipment. Additional statements, related to specific tasks and procedures, are located throughout the manual.

DANGER: Hazardous voltage. Contact with hazardous voltage will cause death or severe personal injury. Follow all locally approved safety procedures when working around high voltage lines and equipment.

WARNING: Before installing, operating, maintaining, or testing this equipment, carefully read and understand the contents of this manual. Improper operation, handling or maintenance can result in death, severe personal injury, and equipment damage.

WARNING: This equipment is not intended to protect human life. Follow all locally approved procedures and safety practices when installing or operating this equipment. Failure to comply may result in death, severe personal injury and equipment damage.

WARNING: Power distribution equipment must be selected for the intended application. It must be installed and serviced by competent personnel who have been trained and understand proper safety procedures. These instructions are written for such personnel and are not a substitute for adequate training and experience in safety procedures. Failure to properly select, install or maintain this equipment can result in death, severe personal injury, and equipment damage.

PRODUCT INFORMATION

Introduction

These transformers are designed for installation on three-phase underground systems. All units are constructed for weather-exposed mounting on a concrete pad with high and low voltage cable entering the operating compartments through an opening in the pad.

Acceptance and Initial Inspection

Receiving Inspection

It is important that a thorough inspection of the transformer be made before it is unloaded from the carrier.

1. Ensure that *all* parts listed on the bill of lading are present.
2. Before unloading the transformer, inspect for signs of damage or mishandling. Locate accessory parts that may have been shipped separately.
3. If damage is detected or shortages are noticed, write a brief description on the freight bill. Normally, the transformer is shipped FOB point of manufacture, and it is the customer's responsibility to file a claim against the carrier. If the transformer was shipped FOB destination, notify your factory representative. He or she will, with the inspector's report, take the necessary steps to file a claim against the carrier.

Handling

WARNING: Heavy Equipment. Improper handling can cause severe injury, death, or damage to transformer. Before moving the transformer, read the handling instructions provided in this manual.

Special procedures must be followed when handling transformer in ambient temperatures below -20°C. Contact your factory representative for further instructions. Failure to follow special handling procedures may cause premature failure of transformer and its components.

Transformer Weight

The transformer weight is shown on the transformer nameplate. Most of the weight in a padmounted transformer assembly is in the main tank that holds the core and coil assembly and the insulating liquid.

Moving Transformers Shipped on Pallets

Transformers shipped on pallets may be lifted or moved by forklift trucks of proper capacity. When using a forklift, lift with the transformer tank closest to the mast of the forklift since most of the transformer weight is in the tank. Pallet mounted equipment may also be moved by crane or hoist.

Lifting Transformers by Crane or Hoist

Check the weight of the transformer and the capacity and condition of all hoisting or lifting equipment. Do not use worn, frayed or damaged cables or slings. Do not use hoisting machinery with load capacity less than the weight of the transformer. Improper use of hoist or jack could seriously damage the transformer or its attachments or cause serious personal injury.

For unloading, lifting lugs are provided near the top of the transformer tank. Lifting chain or cable angles should not be over 30° from vertical. Otherwise, spreaders should be used to hold the lifting cables apart to avoid any bending of the structure or lifting lugs.

Do not attempt to lift the transformer by placing a continuous loop of chain or cable around the unit or lifting lugs. This can damage the transformer and can cause accidents resulting in serious personal injury.

If the transformer cannot be lifted by crane, it may be skidded or moved by rollers.

Using Jacks

Place jacks under the tank base on the open ends of the transformer tank. Jacking pads are provided for transformers with bases greater than 6". Do not place jacks under radiators or terminal compartment frames.

When jacking a transformer for insertion of rollers underneath it, ensure that four jacks are used and that two adjacent corners are raised simultaneously and evenly to avoid warping the base. When using rollers, use as many as necessary to distribute the weight uniformly.

Do not attach pulling lines to moldings or other sheet metal parts of the transformer.

Storage

Transformers that will not be placed in service immediately should be stored with terminal compartment doors closed and sealed to prevent damage to bushings or other attachments.

INSTALLATION

Installation Location

The transformer must be located to meet applicable fire codes. For indoor installations, the installation location must meet the requirements of the National Electric Code (NEC®) with sufficient space requirements and proper overcurrent protection as specified by the listing body that has jurisdiction over the installation.

These padmounted transformers are built to operate at altitudes up to 3300 feet at 30°C average and 40°C maximum ambient, unless otherwise specified. Before operating a standard transformer at higher altitudes, contact your factory representative.

Mounting the Transformer

WARNING: Fire Hazard. Non-level installation of transformer can result in fire and cause severe personal injury or death. Prepare transformer installation site such that transformer does not tilt more than two (2.0) degrees from horizontal while the transformer is in service at the site.

The transformer should be mounted on a level concrete pad. The pad should be strong enough to support the weight of the transformer. The site must be adequately prepared to prevent the transformer from tilting beyond two degrees from horizontal.

Tilting beyond two degrees may cause internal components to come out of the oil and/or cables to mechanically stress the bushings and bushing gaskets. Excessive tilt (beyond two degrees) can result in a lower dielectric strength for the transformer than the basic insulation level (BIL) listed on the nameplate. Reduced BIL can result in an internal dielectric breakdown with a risk of explosion, tank rupture, or fire.

To maintain full cabinet security, the transformer tank and cabinet base have provisions for installing cleats to secure transformer to pad. If gaps still exist between the cabinet and pad after cleating the cabinet, the installation will not provide the security needed to prevent tampering by the public. Add a permanent mortar seal to fill the gaps.

Pre-Service Inspection (Exterior)

New transformers, or transformers which are being activated after a period of storage, should be thoroughly inspected before being connected to the power distribution system to identify damage which may have occurred during storage.

1. The transformer exterior should be inspected for nicks, dents, and scratches. Repair damage to weather-resistant finishes promptly.
2. The tank cover and manhole/handhole cover seals and all gaskets or seals at bushings, gauges, fuses, operating devices, etc., should be inspected for evidence of insulating liquid seepage. Repair leaking or improperly tightened gaskets and seals before the transformer is placed in service.
3. Under normal conditions, the transformer leaves the factory with a slight vacuum (negative pressure) in the tank over the oil. However, positive pressure may have been requested or have developed in the tank during shipment or storage. Continued absence of either negative or positive pressure may indicate a leak at a gasket seal or tank seam, and require further investigation. To leak test transformer, remove the pressure relief valve (see Figure 2) and pressurize the headspace to ensure that there are no leaks. The test pressure should not exceed 7 psig. The established pressure should be maintained for at least four hours to ensure that all the seals are proper.

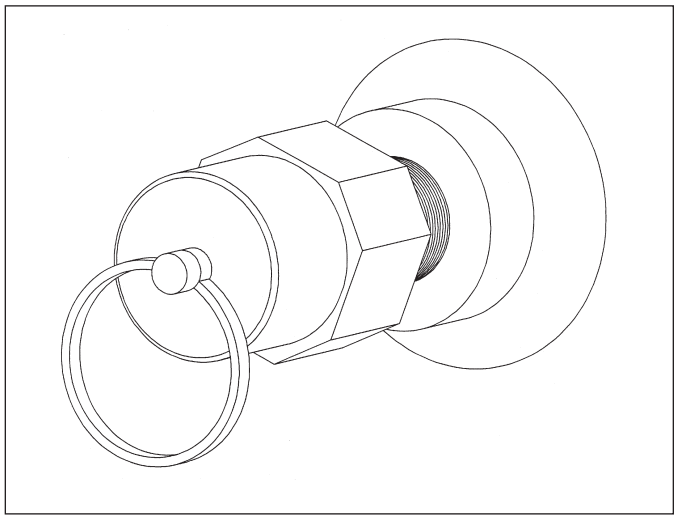

Figure 2.
Pressure Relief Valve

CAUTION: Elevated Pressure. Can cause severe personal injury. Do not remove liquid level plug before venting transformer to zero pressure. Pull ring on pressure relief valve to relieve pressure (see Figure 2).

4. The liquid level inside the tank must be checked (see Insulating Liquid Maintenance section of this manual). On transformers equipped with a liquid level gauge, the liquid level may be read directly from the gauge. On transformers that are not

gauge equipped, the tank liquid level must be determined by removing the liquid level plug (see Figure 3). At 25°C liquid temperature, the liquid level should be at the bottom edge of the liquid level plug hole.

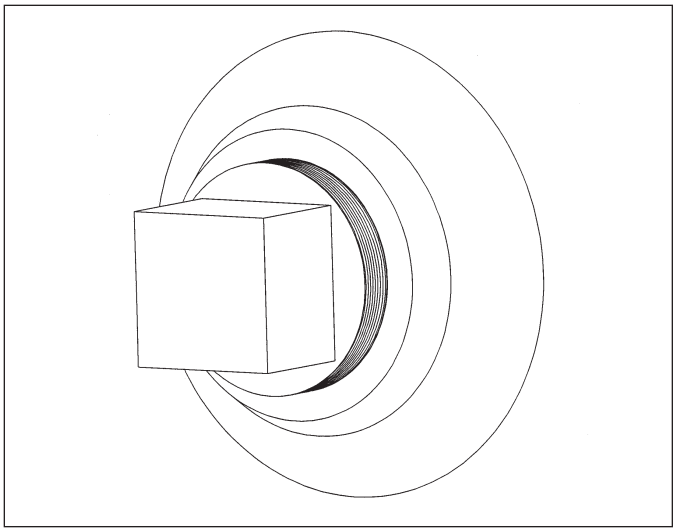

Figure 3.
Liquid Level Plug

If the tank temperature is greater than ambient air temperature, the transformer tank must be vented to zero pressure before the liquid level plug is removed. Failure to do so may cause hot oil to be sprayed from the plug hole and may result in severe personal injury.

WARNING: Fire Hazard. Energizing transformer in ambient temperatures below -20°C can result in fire and cause severe personal injury or death. Contact your factory representative for further instructions on energizing transformer in ambient temperatures below -20°C.

5. Special procedures must be followed when energizing a transformer in ambient temperatures below -20°C. Contact your factory representative for further instructions. Failure to follow special start-up procedures may cause premature failure of the transformer and its components. Also, note warning and caution statements in Switches and Protective Devices section of this manual for further precautions when operating under-oil loadbreak accessories in insulating liquid temperatures below 0°C.

Pre-Service Inspection (Interior)

Pre-service interior inspection may not be required if exterior inspection reveals no evidence of damage.

CAUTION: Before opening the transformer tank for Pre-Service Inspection, read the Insulating Liquid Maintenance section in this manual. This section explains safety precautions that should be taken and gives instructions on how to prevent insulating liquid contamination.

If interior inspection is required, the transformer must be opened by removing the manhole/handhole or tank cover. See the Tank Cover Removal and Installation section of this manual.

Pre-service interior inspections should be restricted to noting defects or damage that may prevent proper operation of the transformer.

Inspect for:

1. Moisture on underside of the tank cover or manhole cover.
2. Loose, shifted, or damaged parts (bushings, fuse holders, etc.).
3. Broken or loose connections.
4. Contaminated insulating liquid (sediment or foreign objects on the tank bottom, dirt or air bubbles suspended in the liquid).

Internal Damage

If concealed internal damage is suspected, it may be necessary to lower the insulting liquid level to complete the inspection. Refer to the Insulating Liquid Maintenance section of this manual.

Contaminated Insulating Liquid

If moisture is found inside the tank, or there is evidence that the insulating liquid may be otherwise contaminated, a liquid sample should be taken for analysis. Samples should be drawn from the bottom of the tank. For instruction on sampling the insulating liquid please see the Insulating Liquid Maintenance section of this manual.

If moisture is present in the liquid, the transformer must be dried out. Contact your factory representative for special instructions on dry-out or other decontamination processes.

External Connections

WARNING: Hazardous voltage. Can cause severe injury, death, or damage to equipment. Ground transformer following industry-accepted safe grounding practices before making other electrical connections. De-energize power distribution wires that will be connected to transformer. Verify that wires are de-energized at the transformer before connecting to transformer.

Transformers that require no internal inspection or repair may be connected to the system. Transformers must be connected and operated as indicated by the transformer nameplate. Clean bushings and terminals before making connections. Remove dirt, grease or foreign material. Contamination can cause failure of the bushings.

Cables connected to the transformer terminals are to have sufficient flex to allow normal pad movement due to ground freeze/thaw and settling. Insufficient cable flex may cause premature failure of the bushings.

Ground Connections

The transformer tank must be connected to a permanent, low-resistance ground. If the tank is not solidly grounded and the transformer is connected to the power distribution system, then the tank should be regarded as energized. An energized tank is extremely dangerous. Contact with an energized tank can shock, burn, or cause death.

Three-phase padmounted transformers are equipped with two grounding pads for making the ground connection. The pads (see Figures 4 & 5) are located on the faceplate of the transformer behind the terminal compartment doors. One pad is in the primary compartment and the other in the secondary compartment.

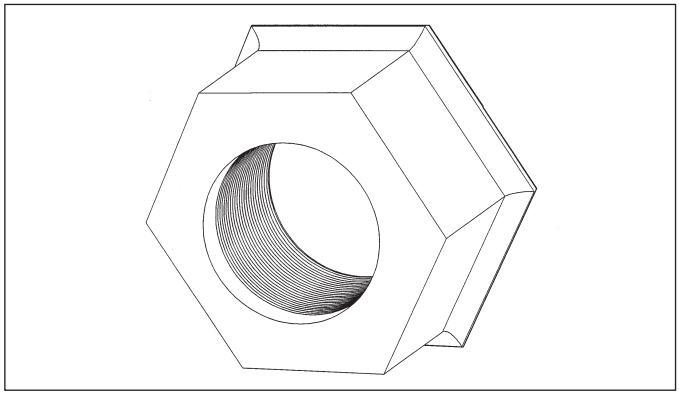

Figure 4.
Grounding Pad (≤500kVA)

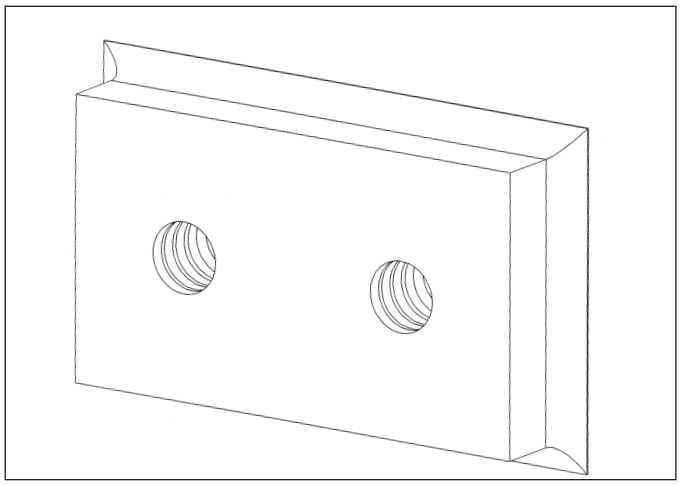

Figure 5.
Grounding Pad (>500kVA)

Grounded Wye-Grounded Wye Transformer Connections

Grounded Wye-Grounded Wye winding connection transformers are designed for power distribution systems that have a grounded neutral connector. All windings designed for grounded neutral operation must be permanently and solidly grounded to the system neutral without electrical resistance.

High Voltage Connections

Make connections as shown in the diagrams and information on the transformer nameplate. Transformer neutrals must be connected to system neutrals. Leads and connections that are not used must be insulated from ground and all other leads.

Livefront Transformer Connections

Externally clamped porcelain bushings are normally provided for high voltage connection to three-phase padmounted livefront transformers. The bushings have tin-plated eyebolt terminals suitable for both copper and aluminum conductors. The bushings are positioned to allow vertical takeoff of primary cables entering from below.

Deadfront Transformer Connections

Deadfront three-phase padmounted transformers are equipped with universal bushing wells, one-piece bushings, or bushing wells with factory-installed inserts. Universal bushing wells must be field equipped with bushing well inserts before loadbreak cable connections can be made. Bushing well inserts must be compatible with the universal bushing well. Use of improperly rated

inserts can cause premature failure of the transformer or its components. Read the manufacturer's instructions furnished with the inserts before installing to determine if they are compatible.

Low Voltage Connections

Spade terminals are the standard low voltage connectors used for three-phase padmounted transformers. The low voltage bushings are externally clamped to the transformer tank wall.

.

ACCESSORIES

Three-phase padmounted transformers can be equipped with a variety of optional equipment. Most such accessories are factory installed and no fieldwork is required to prepare them for operation.

Liquid Level Gauge

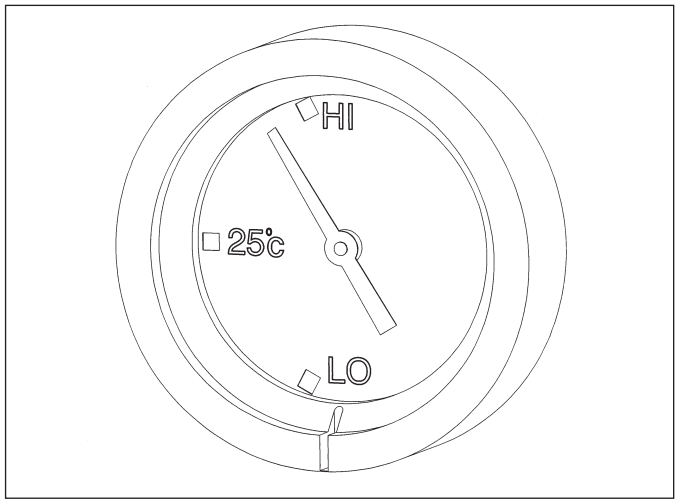

Figure 6.
Liquid Level Gauge

Transformers may be furnished with a liquid level indicator as optional equipment to aid in the systematic inspection of the transformer under load. It consists of a float-arm inside the tank, an indicating pointer and a magnetic coupling between the two across a liquid-tight separation.

The gauge may have two SPDT (Single Pole Double Throw) alarm contacts to give a remote annunciation of low liquid level. For wiring and contact ratings, refer to the schematic furnished with the transformer.

Liquid Temperature Gauge

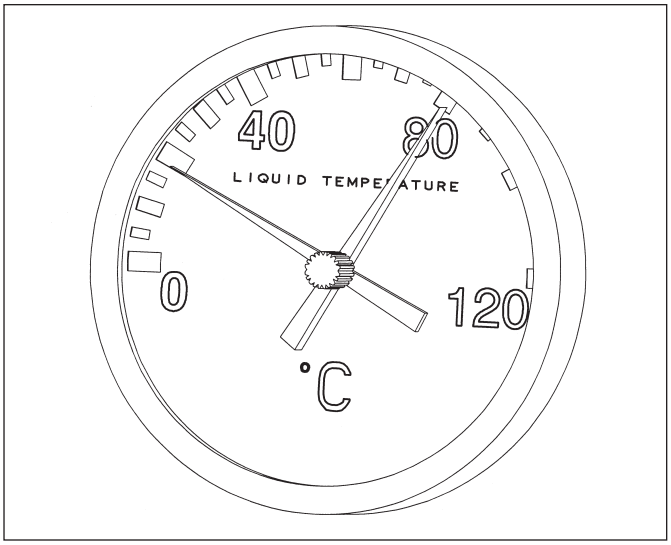

Figure 7.
Liquid Temperature Gauge

Transformers may be furnished with a temperature gauge as optional equipment to indicate the top liquid temperature in the tank in degrees Centigrade. The temperature-sensitive element is mounted in a leak-proof well, permitting removal of the thermometer without lowering the oil level. The device is furnished with an additional red pointer to show the highest temperature attained since the last reset. To reset the maximum indicator, turn the knob in the center of the dial.

The thermometer may have two SPDT contacts for a high temperature alarm, for energizing a fan circuit or for a low temperature alarm. For wiring and contact ratings, refer to the schematic furnished with the transformer.

Pressure-Vacuum Gauge

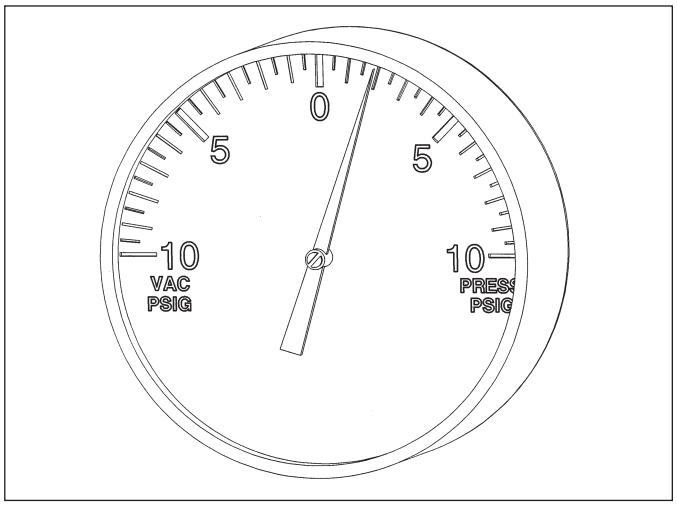

Figure 8.
Pressure-Vacuum Gauge

Transformers may be furnished with a pressure-vacuum gauge as optional equipment to indicate whether the gas space in the tank is under positive or negative pressure. The pressure will vary depending on the transformer temperature. If the transformer is de-energized or operating under light load in low ambients, the pressure may be negative.

CAUTION: If the indicator reads zero and does not change under any load condition, the transformer should be checked for a possible leak in the seal.

If sufficient air has been absorbed by the liquid during shipment or storage, the transformer may operate indefinitely in the vacuum range, depending upon the loading conditions. This, in itself, is not cause for concern, provided the pressure vacuum gauge does not remain on zero for any length of time - an indication of a leak.

The transformer may have pressure vacuum switches with two SPDT contacts for remote alarm on positive and negative pressure. For wiring and contact ratings, refer to the schematic furnished with the transformer.

Pressure Relief Device

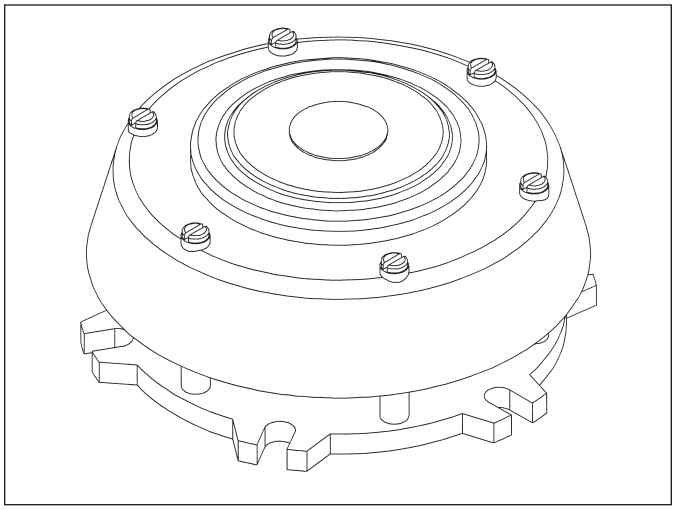

Figure 9.
Pressure Relief Device

Transformers may have a cover-mounted pressure relief device (PRD) in addition to the faceplate-mounted pressure relief valve (PRV) standard on all three-phase padmounted designs. The cover-mounted PRD consists of a self-resetting, spring-loaded diaphragm and a mechanical operation indicator. Should the tank pressure increase above that for which the device is set, the gas pressure will lift the diaphragm and let the gas escape quickly. Immediately after the pressure returns to normal, the diaphragm will reset and reseal the transformer. A mechanical indicator will protrude vertically. This must be reset manually to indicate subsequent operations.

The PRD may have SPDT alarm contacts for remote signaling of device activation. For wiring and contact ratings, refer to the schematic furnished with the transformer.

SWITCHES AND PROTECTIVE DEVICES

Bay-O-Net Fuse

WARNING: Hazardous voltage. Can cause severe injury, death, or damage to equipment.

- Do not operate loadbreak equipment if a fault condition is suspected. Doing so can cause an explosion or fire.
- Use a hotstick to operate transformer loadbreak equipment.
- After operating transformer loadbreak equipment, check that voltages at transformer terminals are the expected values. Checking voltages verifies that loadbreak equipment operated properly and that electrical circuit conditions are as expected.
- Before servicing transformer secondary connected equipment, verify that all transformer secondary terminals have zero voltage and ground the transformer secondary terminals following industry accepted safe grounding practices. Grounding secondary terminals protects against situations such as a standby generator energizing transformer from the secondary circuit.
- Before servicing transformer, ALWAYS de-energize the transformer from a remote upstream source and then proceed to ground all primary and secondary transformer terminals following industry accepted safe grounding practices. Grounding secondary terminals protects against situations such as a standby generator energizing transformer from the secondary circuit.
- Follow industry accepted safety practices. Utilize protective clothing and equipment when working with loadbreak equipment.

WARNING: Three-phase padmounted transformers use conventional transformer oil, R-Temp®, or Envirotemp® FR3™ for an insulating liquid. When the insulating liquid temperature is less than -20°C (-4°F) for conventional transformer oil, less than 0°C (32°F) for R-Temp, or less than -10°C (14°F) for Envirotemp FR3, viscosity is reduced, which may reduce make and break capabilities of loadbreak devices. Below these temperatures, under-oil loadbreak accessories should not be used to make or break a load. Instead, de-energize transformer from a remote upstream source before operating under-oil loadbreak devices.

WARNING: Hazardous voltage. Can cause severe injury, death, or damage to equipment. Use a hotstick to service a Bay-O-Net fuse. Do not install a Bay-O-Net fuse to complete an electrical circuit if a fault condition is suspected. Do not re-energize suspected failed equipment. After installing Bay-O-Net fuse, energize transformer from a remote upstream source.

Cooper Power Systems Bay-O-Net fuse assemblies are used to protect transformers and distribution systems. The assemblies are mounted on the faceplate of padmounted transformers and combine the ease of hotstick operation with the safety of deadfront construction (see Figure 10).

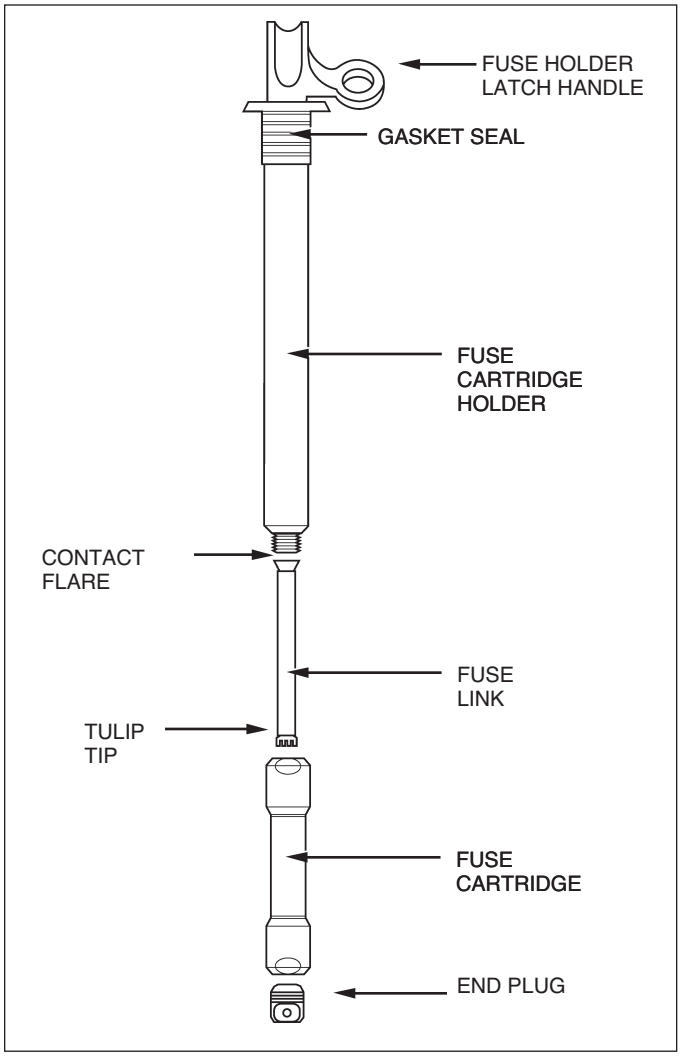

Figure 10.
Bay-O-Net Fuse Assembly

A Bay-O-Net fuse is not recommended for fault closing. Do not re-energize suspected failed equipment; serious personal injury may result. Internal fault conditions can cause the transformer to rupture or the cover to blow off. Always energize transformer from a remote upstream source.

When replacing a blown fuse, the feed circuit should be opened and closed from a remote location. The Bay-O-Net fuse should be replaced using the procedure described below and re-energized from a remote upstream source. If equipment is re-fused while energized, the fuse could close in on the system's maximum fault current. Any equipment that has a suspected failure should not be closed in with the fuse.

For additional information on the Cooper Power Systems Bay-O-Net fuse assembly, including loadbreak ratings, refer to Electrical Apparatus bulletins 240-40, S240-40-2, and S240-40-3.

Current sensing, dual sensing, dual element, and high ampere overload links can be used in a Bay-O-Net fuse assembly. For additional information on these links, including interrupting ratings, see Electrical Apparatus bulletins 240-45, 240-46, 240-48, and 240-49 respectively.

Bay-O-Net Fuse Re-Fusing Instructions

Remove Fuse Holder
Step 1 - Relieve Tank Pressure.

Use a hotstick to perform the following steps:

1. Pull ring on pressure relief valve to open valve. Hold the valve open for 30 seconds after pressurized air can no longer be heard hissing through the valve.

CAUTION: If tank pressure has not been released, the fuse holder may be forced out of the Bay-O-Net housing. Maintain control of fuse holder at all times.

2. Close pressure relief valve and wait 30 seconds.
3. Pull pressure relief valve open. Hold the valve open until hissing stops, and then for another 5 seconds. Pulling the valve open again allows any residual pressure to be released from tank.

Step 2 - Unlock Fuse Holder and Break Seal.

Use a hotstick to perform the following steps:

1. Stand to one side of the Bay-O-Net being removed.
2. Attach hotstick to fuse holder eye.
3. Twist hotstick to unlock fuse holder (see Figure 11).
4. Turn fuse holder 90° in the Bay-O-Net housing to break seal between seal gasket and Bay-O-Net housing (see Figure 11).

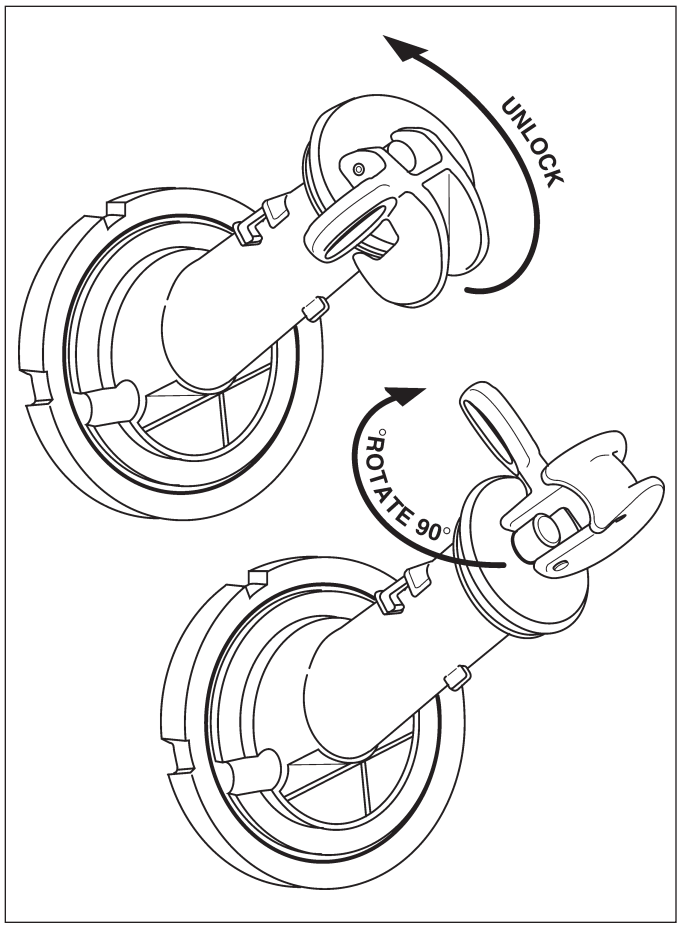

Figure 11.
Unlock and Turn Fuse Holder 90° in the Bay-O-Net Housing

Step 3 - Draw Fuse Holder Out.

Use a hotstick to perform the following steps:

1. Draw fuse holder out quickly 8 to 10 inches to interrupt load (see Figure 12).
2. Wait several seconds for fluid to drain from fuse holder.

CAUTION: If fluid is coming out of the Bay-O-Net assembly, open the pressure relief valve again to equalize pressure inside the tank.

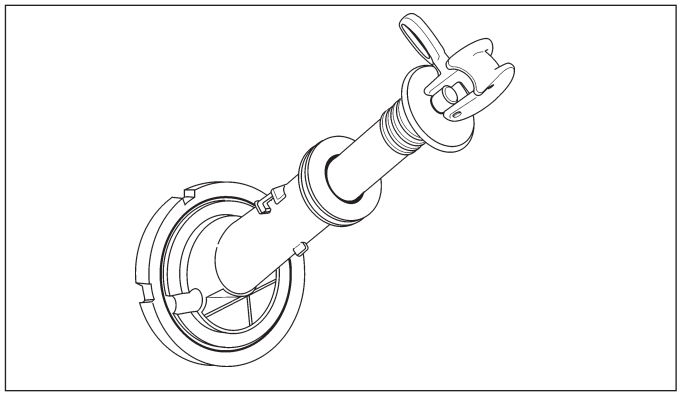

Figure 12.
Draw Fuse Holder Out 8 to 10 Inches

Step 4 - Remove Fuse Holder from Bay-O-Net Housing.

1. Remove fuse holder from Bay-O-Net housing.
2. Wipe off fuse cartridge holder and fuse cartridge (see Figure 13).

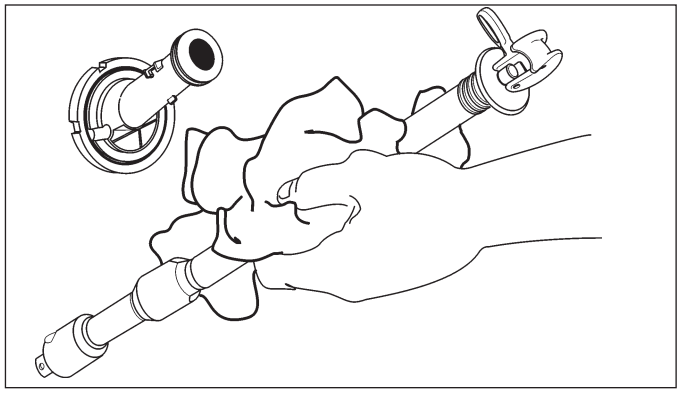

Figure 13.
Remove Fuse Holder From Bay-O-Net Housing and Wipe Clean

Replace Fuse Link

A separate replaceable fuse link, fuse cartridge, and end plug are available for all Cooper Power Systems Bay-O-Net fuses except catalog numbers 4000358C16CB and C18CB, 4038361C03CB, C04CB, C05CB, and solid link 4038361C10CB. These catalog numbers are integral assembles which include the link, cartridge and end plug. For the above listed integral assemblies follow step 5 and then tighten new cartridge/fuse/end plug against fuse holder using 50 to 70 in-lbs. torque; then, proceed to step 9. For all other Bay-O-Net fuses, follow steps 5 through 9.

Step 5 - Remove Fuse Cartridge.

Use a 3/4 inch wrench to remove fuse cartridge from fuse cartridge holder (see Figure 14).

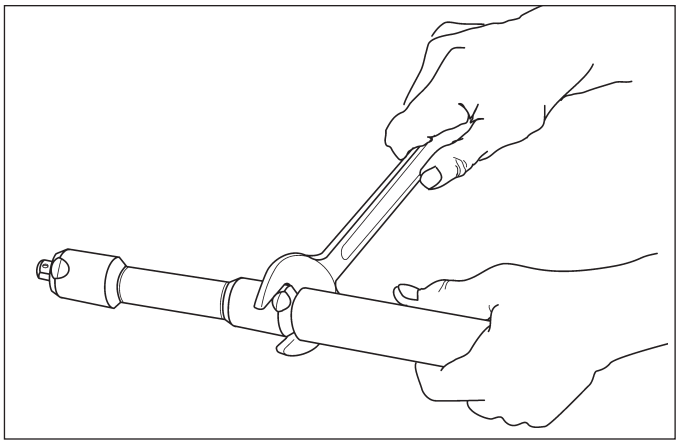

Figure 14.
Remove Fuse Cartridge Holder

Step 6 - Remove End Plug and Fuse Link from Fuse Cartridge.

1. Use 3/4 inch and 1/2 inch wrenches to remove end plug (see Figure 15).
2. Use screwdriver or other tool to straighten tulip tip end of fuse link and push fuse link out of fuse cartridge. Replace fuse cartridge if damaged.

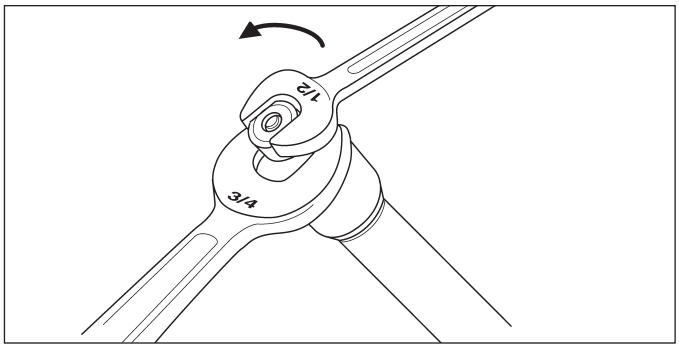

Figure 15.
Remove End Plug from Fuse Cartridge

Step 7 - Insert Replacement Fuse Link Into Fuse Cartridge (see Figure 16).

1. A slight resistance may occur when inserting fuse link into cartridge.
2. If the catalog number of the fuse being replaced is not known, consult specifications or contact a factory representative. Fuse catalog numbers may

also be indicated on the transformer door and/or nameplate.

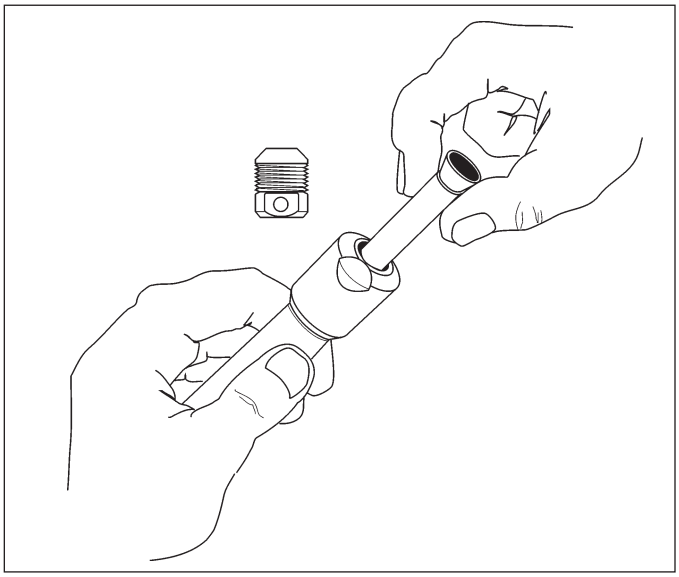

Figure 16.
Insert Replacement Fuse Link

Step 8 - Tighten Cartridge to Fuse Cartridge Holder.

1. Tighten fuse contact flare end against fuse cartridge holder using 50 to 70 in-lbs. torque.
2. Replace end plug on the other end of fuse cartridge and tighten to 50 to 70 in-lbs. torque.
3. Remove end plug and ensure that petals of tulip tip have spread uniformly.
4. Replace end plugs, applying 50 to 70 in-lbs. torque to both connections.

Step 9 - Install Fuse Holder.

Use a hotstick to perform the following steps.

1. Pull pressure relief valve, holding it open until hissing stops, and then for another five seconds.
2. Attach end of fuseholder assembly to hotstick and insert holder assembly firmly into Bay-O-Net housing.
3. Twist locking handle so that latch engages Bay-O-Net housing's shoulder, and steel washer seats tightly on end of tube of Bay-O-Net holder assembly.

CAUTION: Visually inspect entire fuse holder assembly to ensure it is installed properly.

Internal Cartridge Fuse

WARNING: Hazardous voltage. Can cause severe injury, death, or damage to equipment. Turn off power to transformer before servicing internal cartridge fuses. Ground transformer following industry accepted safe grounding practices.

Internal cartridge fuses are "weak link" expulsion-type fuses used to protect transformers and distribution systems. Internal cartridge fuse assemblies are mounted inside the transformer tank and are compatible for use in all Cooper Power Systems insulating liquids. See fuse manufacturer's product literature for maximum interrupting ratings.

Internal Cartridge Fuse Replacement

1. Verify that tank is grounded. De-energize transformer from a remote upstream source. Ground all bushings and terminals.
2. Remove tank cover as outlined in Tank Cover Removal and Installation section of this manual.
3. Locate cartridge fuse assembly (see Figure 17) on back tank wall.

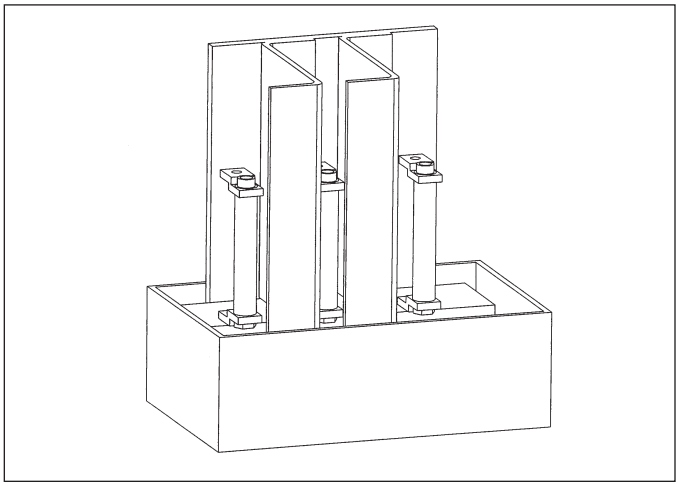

Figure 17.
Cartridge Fuse Assembly

4. Carefully remove all nuts that attach wire leads to fuse, making sure not to drop nuts into the transformer tank. Note position of all nuts, flat washers, spring washers, etc., so that they can be reinstalled in the same locations.
5. Replace fuses as required. Reconnect leads and re-install washers and nuts in original locations.
6. Re-install cover as outlined in Tank Cover Removal and Installation section of this manual.

Internal Loadbreak Switches

WARNING: Hazardous voltage. Can cause severe injury, death, or damage to equipment.

- Do not operate loadbreak equipment if a fault condition is suspected. Doing so can cause an explosion or fire.
- Use a hotstick to operate transformer loadbreak equipment.
- After operating transformer loadbreak equipment, check that voltages at transformer terminals are the expected values. Checking voltages verifies that loadbreak equipment operated properly and that electrical circuit conditions are as expected.
- Before servicing transformer secondary connected equipment, verify that all transformer secondary terminals have zero voltage and ground the transformer secondary terminals following industry accepted safe grounding practices. Grounding secondary terminals protects against situations such as a standby generator energizing transformer from the secondary circuit.
- Before servicing transformer, ALWAYS de-energize the transformer from a remote upstream source and then proceed to ground all primary and secondary transformer terminals following industry accepted safe grounding practices. Grounding secondary terminals protects against situations such as a standby generator energizing transformer from the secondary circuit.
- Follow industry accepted safety practices. Utilize protective clothing and equipment when working with loadbreak equipment.

WARNING: Three-phase padmounted transformers use conventional transformer oil, R-Temp®, or Envirotemp® FR3™ for an insulating liquid. When the insulating liquid temperature is less than -20°C (-4°F) for conventional transformer oil, less than 0°C (32°F) for R-Temp or less than -10°C (14°F) for Envirotemp FR3, viscosity is reduced, which may reduce make and break capabilities of loadbreak devices. Below these temperatures, under-oil loadbreak accessories should not be used to make or break a load. Instead, de-energize transformer from a remote upstream source before operating under-oil loadbreak devices.

It is recommended that remote energization be used whenever possible. Operate loadbreak switches using hotstick tool. After loadbreak switch is switched to “OPEN” position, verify that transformer secondary terminals have zero voltage and then ground the secondary terminals to prevent transformer backfeed energization.

Two-Position Loadbreak Switch

The operating mechanism of the Cooper Power Systems two-position loadbreak switch employs a manually-charged over-toggle stored spring assembly which performs independent of operator speed. The spring-loaded activating mechanism ensures quick loadbreak or loadmake operations in less than one cycle. Incorporated into the switch mechanism are internal stops that restrict the handle orientation to only two positions: “OPEN” and “CLOSED” (see Figure 18). The switch should be hotstick-operated and will require 15 ft-lbs. minimum input torque to operate.

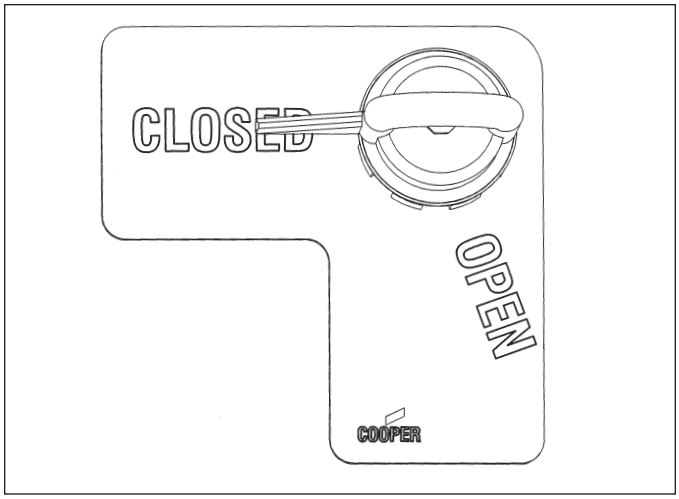

Figure 18.
Two-Position Loadbreak Switch Handle and Indicator Plate

Refer to Electrical Apparatus bulletin 800-65 for two-position loadbreak switch ratings.

Sectionalizing Loadbreak Switch

The Cooper Power Systems sectionalizing loadbreak switch rotates 360° in either direction for alternate source selection. An externally-installed index plate prevents rotation to positions other than the one desired. The switch cannot be switched more than one position without resetting the index plate.

A spring-loaded activating mechanism ensures quick loadbreak action and positive contact engagement through all positions. Switching can be accomplished in less than one cycle, and should be performed with a hotstick. To follow are operation examples for the two most common sectionalizing switch configurations.

The following is a V-blade switch operation example (see Figure 19):

If “A” is the feeder and it is desired to switch to “B” feeder, the V-blade switch can be rotated as follows:

1. Set index stop plate between “LINE A ONLY” and “OPEN”.
2. Rotate switch handle counterclockwise to “OPEN”. Transformer and loop conductor are now “OPEN”.
3. Move index plate between “OPEN” and “LINE B ONLY”.
4. Rotate switch handle counterclockwise to “LINE B ONLY”. Transformer is now energized for “B” feeder.

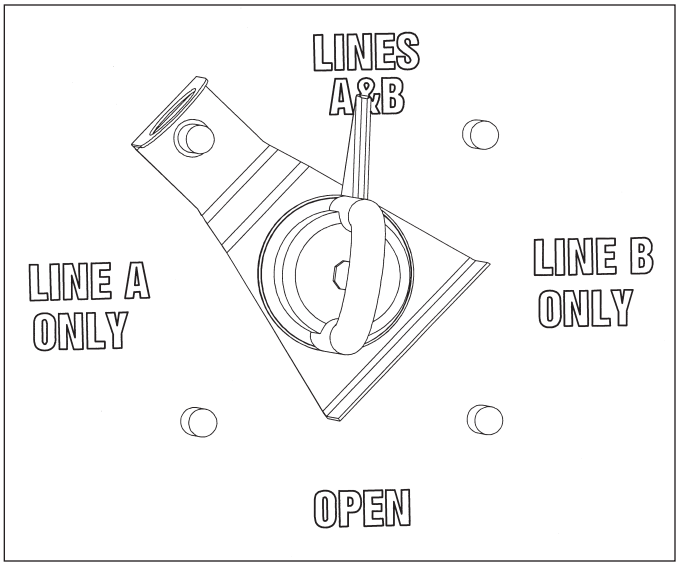

Figure 19.
V-Blade Four-Position Sectionalizing Switch Handle and Index Plate

The following is a T-blade switch operation example (see Figure 20):

If “A” is the feeder and it is desired to switch to “B” feeder, the T-blade switch can be rotated as follows:

1. Set index stop plate between “LINE A ONLY” and “LOOP THRU TRANSFORMER OPEN”.
2. Rotate switch handle counterclockwise to “LOOP THRU TRANSFORMER OPEN”. The transformer is now “OPEN” and the loop conductor is electrically connected.
3. Move index plate between “LOOP THRU TRANSFORMER OPEN”” and “LINE B ONLY”.
4. Rotate switch handle counterclockwise to “LINE B ONLY”. The transformer is now energized for “B” feeder.

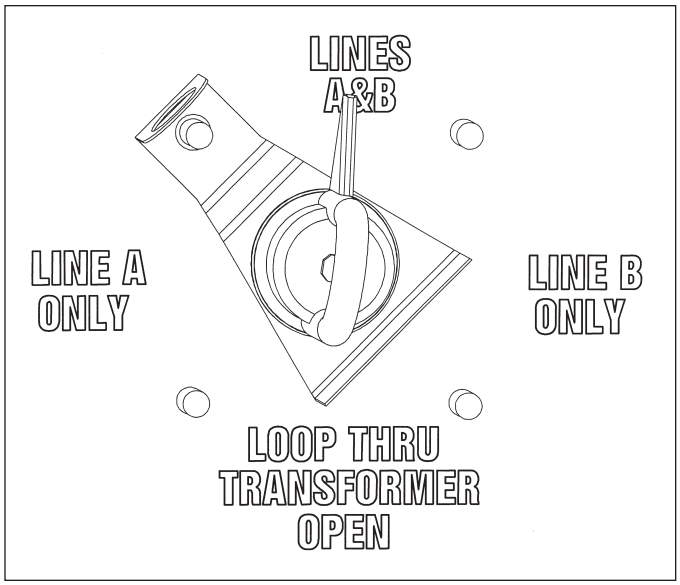

Figure 20.
T-Blade Four-Position Sectionalizing Switch Handle and Index Plate

For switch ratings and additional switch configurations refer to Electrical Apparatus bulletin 800-64.

Tap Changer

WARNING: Hazardous voltage. Can cause severe injury, death, or damage to equipment. De-energize transformer from a remote upstream source before operating non-loadbreak tap changers, dual-voltage switches, or delta-wye switches.

Transformers equipped with a tap changer can be changed from one operating voltage to another. The transformer must be de-energized and grounded before the tap changer is operated. Operating voltages accessible through use of the tap changer are indicated on the transformer nameplate.

On most three-phase padmounted transformers equipped with tap changers, the tap changer operating handle is located on the faceplate in the high-voltage terminal compartment.

The standard style of tap changer will have a hotstick-operable handle. There are two styles of tap changer with this type of handle, each requiring a slightly different method for changing tap settings.

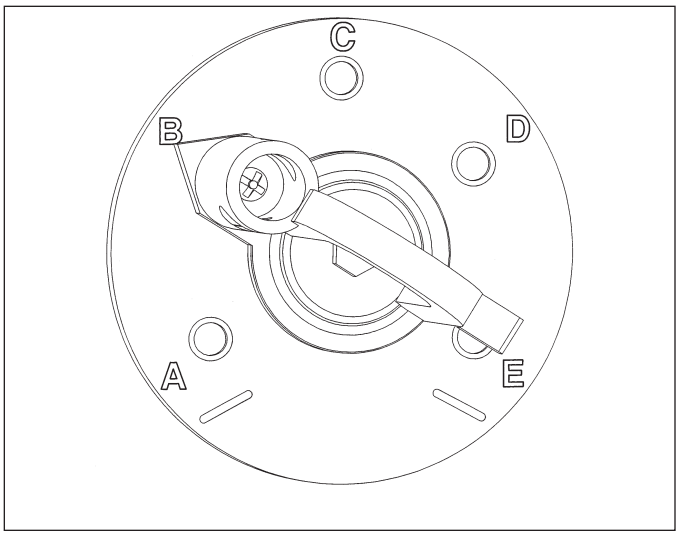

Figure 21.
Hotstick-Operable Tap Changer (Style I)

The tap changer shown in Figure 21 can be switched to a new tap position as follows:

1. Verify that tank is grounded. De-energize transformer from a remote upstream source. Ground all bushings and terminals before operating the tap switch.
2. Back out lock screw to clear index plate.
3. Rotate handle to desired position.
4. Secure handle in its new position by tightening lock screw through index plate until it bottoms.
5. Padlocking may be accomplished through hole provided.

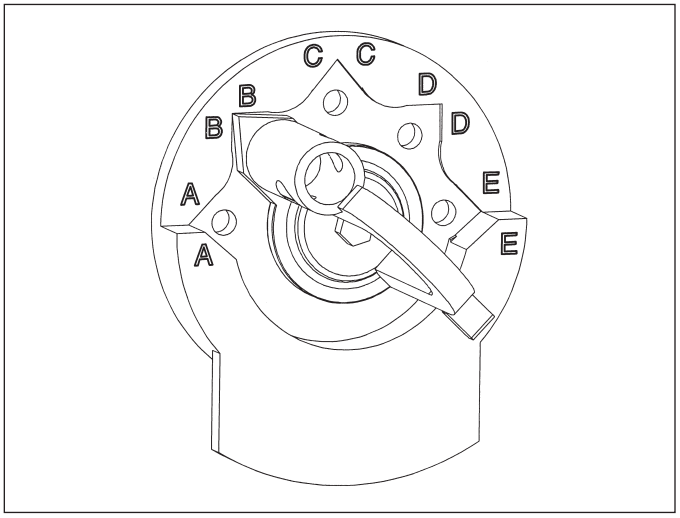

Figure 22.
Hot stick-Operable Tap Changer (Style II)

The tap changer shown in Figure 22 can be switched to a new tap position as follows:

1. Verify that tank is grounded. De-energize transformer from a remote upstream source. Ground all bushings and terminals before operating the tap switch.
2. Back out lock screw to clear index plate.
3. Pull handle out to clear index plate.
4. Rotate handle to desired position and allow pointer to drop into slot of index plate.
5. Secure handle in its new position by tightening lock screw through index plate until it bottoms.
6. Padlocking may be accomplished through hole provided.

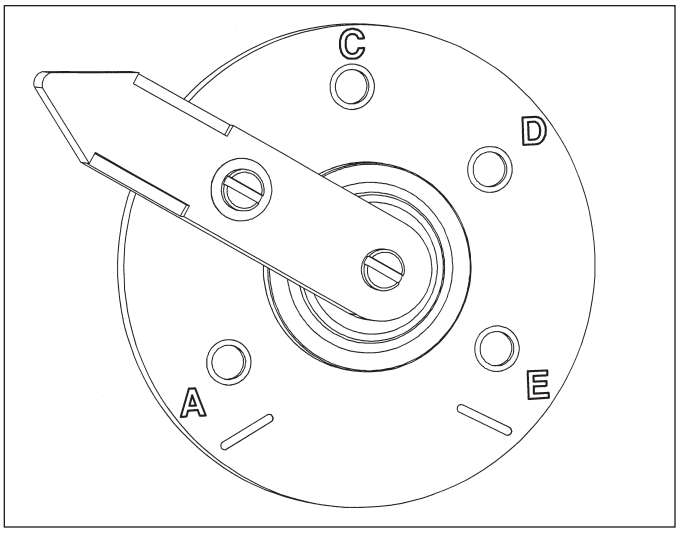

Figure 23.
Lever Handle Tap Changer

On some transformers, tap changers have a lever handle (see Figure 23). A lock screw secures the handle at a particular setting. Such tap changers can be switched to a new position as follows;

1. Verify that tank is grounded. De-energize transformer from a remote upstream source. Ground all bushings and terminals before operating the tap switch.
2. Back out lock screw to clear index plate.
3. Rotate handle to desired position.
4. Secure handle in its new position by tightening lock screw through index plate until it bottoms.

Dual-Voltage and Delta-Wye Switch

WARNING: Hazardous voltage. Can cause severe injury, death, or damage to equipment. De-energize transformer from a remote upstream source before operating non-loadbreak tap changers, dual-voltage switches, or delta-wye switches.

CAUTION: Excessive current. Can cause damage to transformer winding. When dual-voltage or delta-wye switches are set to connect transformer windings in parallel, tap changers must be in the position shown on the transformer nameplate.

Transformers equipped for dual-voltage or delta-wye (reconnectable winding) operations usually have an externally-operable switch mounted on the faceplate in the high voltage terminal compartment. Units combining dual-voltage and delta-wye may have two separate switches. The transformer must be de-energized and grounded before dual-voltage or delta-wye switches are operated. Attempting to change dual-voltage or delta-wye switches on an energized transformer may result in damage to the equipment and severe personal injury.

Dual-voltage windings are either connected in series (for the higher voltage) or in parallel (for the lower voltage). Dual-voltage and delta-wye switches have two positions. Switch positions are identified on the transformer nameplate and marked by corresponding numerals on the switch mounting plate.

When dual-voltage or delta-wye switches are set to connect transformer windings in parallel, tap changers must be in the position shown on the transformer nameplate. Tap changers cannot be used to adjust voltage when transformer windings are connected in parallel. Improper tap-changer settings will cause circulating currents in the windings, which will damage the windings and cause failure of the transformer.

To change dual winding switch settings:

The standard type of dual-voltage or delta-wye switch will have a hotstick-operable handle (see Figure 24).

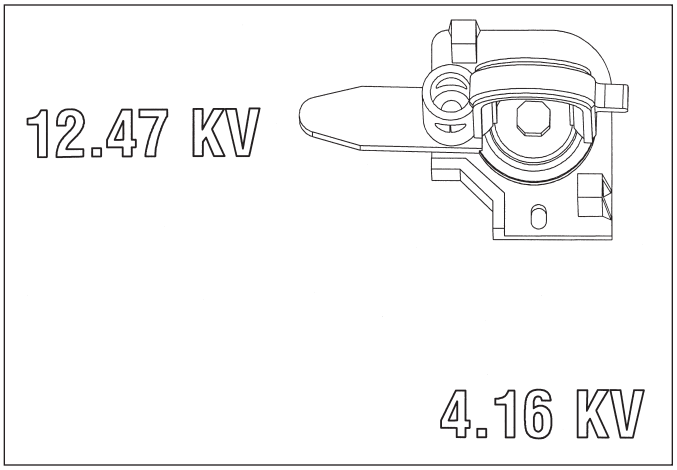

Figure 24.
Dual-Voltage/Delta-Wye Switch (Hotstick-Operable)

This type of dual-voltage or delta-wye switch can be switched to a new position as follows:

1. Verify that tank is grounded. De-energize transformer from a remote upstream source. Ground all bushings and terminals before operating dual-voltage or delta-wye switch.
2. Back out lock screw to clear index plate.
3. Pull handle out to clear index plate and rotate handle 90°. Drop handle into new position.
4. Secure handle in its new position by tightening lock screw through index plate until it bottoms.
5. Padlocking may be accomplished through hole provided.

On some transformers, dual-voltage or delta-wye switches have a lever handle (see Figure 25).

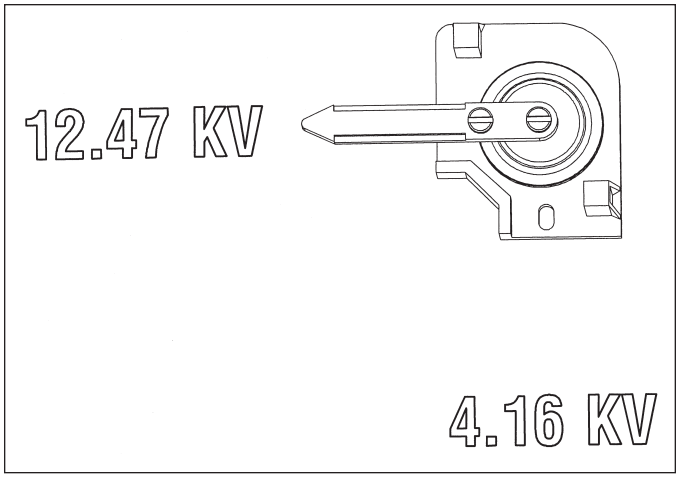

Figure 25.
Dual-Voltage/Delta-Wye Switch (Lever Handle)

This type of dual-voltage or delta-wye switch can be switched to a new position as follows:

1. Verify that tank is grounded. De-energize transformer from a remote upstream source. Ground all bushings and terminals before operating dual-voltage or delta-wye switch.
2. Back out lock screw to clear index plate.
3. Rotate handle 90° to new position.
4. Secure handle in its new position by tightening lock screw through index plate until it bottoms.

Vacuum Fault Interrupter (VFI)

WARNING: Hazardous voltage. Can cause severe injury, death, or damage to equipment.

- Do not operate loadbreak equipment if a fault condition is suspected. Doing so can cause an explosion or fire.
- Use a hotstick to operate transformer loadbreak equipment.
- After operating transformer loadbreak equipment, check that voltages at transformer terminals are the expected values. Checking voltages verifies that loadbreak equipment operated properly and that electrical circuit conditions are as expected.
- Before servicing transformer secondary connected equipment, verify that all transformer secondary terminals have zero voltage and ground the transformer secondary terminals following industry accepted safe grounding practices. Grounding secondary terminals protects against situations such as a standby generator energizing transformer from the secondary circuit.
- Before servicing transformer, ALWAYS de-energize the transformer from a remote upstream source and then proceed to ground all primary and secondary transformer terminals following industry accepted safe grounding practices. Grounding secondary terminals protects against situations such as a standby generator energizing transformer from the secondary circuit.
- Follow industry accepted safety practices. Utilize protective clothing and equipment when working with loadbreak equipment.

WARNING: Three-phase padmounted transformers use conventional transformer oil, R-Temp®, or Envirotemp® FR3™ for an insulating liquid. When the insulating liquid temperature is less than -20°C (-4°F) for conventional transformer oil, less than 0°C (32°F) for R-Temp or less than -10°C (14°F) for Envirotemp FR3, viscosity is reduced, which may reduce make and break capabilities of loadbreak devices. Below these temperatures, under-oil loadbreak accessories should not be used to make or break a load. Instead, de-energize transformer from a remote upstream source before operating under-oil loadbreak devices.

Cooper Power Systems VFI transformers utilize vacuum interrupters to provide fault current interruption and load make/break switching capabilities. The VFI uses the same technology used in Kyle® VFI Pad-Mounted Switchgear.

VFI transformers can be configured for either transformer protection or loop protection. A VFI transformer with transformer protection protects the transformer and provides proper coordination with upstream protective devices. A VFI transformer with loop protection protects the loop or downstream section of a feeder. Consequently, when a fault occurs downstream, the VFI breaker trips and isolates the fault, leaving the transformer load uninterrupted.

The VFI in a VFI transformer has a hotstick-operable handle located on the faceplate of the transformer, with the operating mechanisms configured for ganged three-phase operation (see Figure 26). The VFI is opened by pulling the operation handle down to the open position. The VFI is closed by briskly pushing the handle up, into the closed position. If the VFI mechanism has tripped as the result of a fault or overload condition, the mechanism must be reset before it can be closed. To reset the mechanism, firmly pull the operation handle down toward the ground until the latch resets. After the latch has been successfully re-set, the VFI interrupter mechanism can be closed normally.

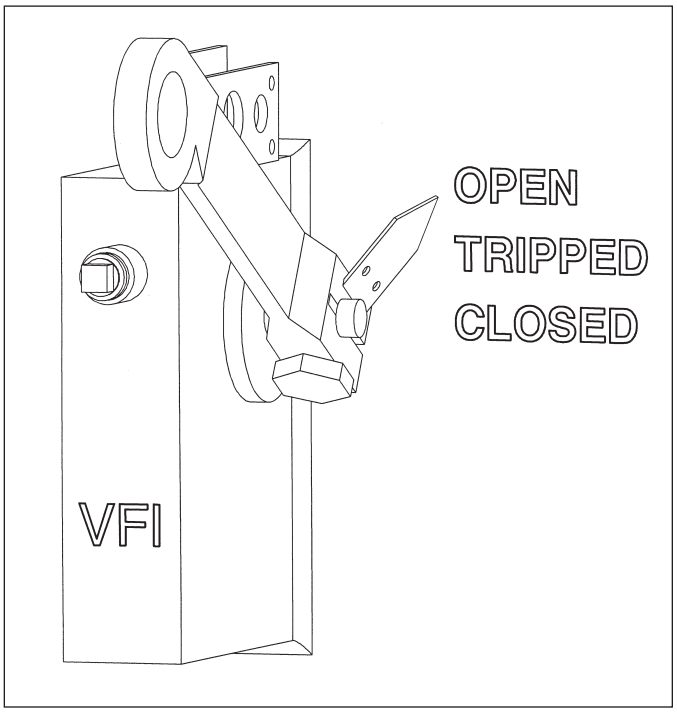

Figure 26.
VFI Operating Handle

Current-sensing transformers (CTs) located inside the VFI transformer provide line current information to the electronic control. When line current exceeds the minimum trip setting, the control initiates a signal which causes the VFI to trip and then interrupt the circuit. All three phases will open when the VFI is tripped, regardless of whether the trip was single-phase or three-phase initiated.

Refer to Service Information bulletin S285-75-1 for electronic control operation instructions.

Electrical ratings for Cooper Power Systems VFI's are as follows:

Continuous Current (max). 600A
Interrupting Current (sym./asym.) 12kA/20kA
Momentary Current 10 cycles (asym.) 20kA
1-Second Withstand Current (sym.). 12kA
Making Current (sym.). 12kA

For further information on Cooper Power Systems VFI transformers, contact your factory representative.

Air Switches (Arc-Strangler®)

WARNING: Hazardous voltage. Can cause severe injury, death, or damage to equipment.

- Do not operate loadbreak equipment if a fault condition is suspected. Doing so can cause an explosion or fire.
- Use a hotstick to operate transformer loadbreak equipment.
- After operating transformer loadbreak equipment, check that voltages at transformer terminals are the expected values. Checking voltages verifies that loadbreak equipment operated properly and that electrical circuit conditions are as expected.
- Before servicing transformer secondary connected equipment, verify that all transformer secondary terminals have zero voltage and ground the transformer secondary terminals following industry accepted safe grounding practices. Grounding secondary terminals protects against situations such as a standby generator energizing transformer from the secondary circuit.
- Before servicing transformer, ALWAYS de-energize the transformer from a remote upstream source and then proceed to ground all primary and secondary transformer terminals following industry accepted safe grounding practices. Grounding secondary terminals protects against situations such as a standby generator energizing transformer from the secondary circuit.
- Follow industry accepted safety practices. Utilize protective clothing and equipment when working with loadbreak equipment.

WARNING: Three-phase padmounted transformers use conventional transformer oil, R-Temp®, or Envirotemp® FR3™ for an insulating liquid. When the insulating liquid temperature is less than -20°C (-4°F) for conventional transformer oil, less than 0°C (32°F) for R-Temp or less than -10°C (14°F) for Envirotemp FR3, viscosity is reduced, which may reduce make and break capabilities of loadbreak devices. Below these temperatures, under-oil loadbreak accessories should not be used to make or break a load. Instead, de-energize transformer from a remote upstream source before operating under-oil loadbreak devices.

WARNING: Hazardous voltage. Can cause severe injury, death, or damage to equipment. Depending on configuration, Arc-Strangler fuses or switchblades may be energized even when in the "open" position. Refer to Electrical Apparatus bulletin 240-60 for further information.

Arc-Strangler Loadbreaking Device With NX® Fusing

NX full range current limiting fuses up to 15.5kV can be ordered with an integral Arc-Strangler loadbreaking device. These in-air devices are mounted on the faceplate of the transformer. The Arc Strangler has the same operating characteristics as the basic NX clip-style fuse, along with loadbreaking capabilities.

The Arc-Strangler loadbreaking device is a spring-loaded sliding sleeve that extinguishes the arc drawn between the mounting contacts and the fuse conductor when the fuse is opened while load current is flowing. All magnitudes of current through the continuous current rating of the fuse can be interrupted positively and safely under proper conditions. A pullring at the top of the fuse assembly (for hotstick operation) and a hinge at the bottom complete the loadbreak device.

Arc-Strangler Switchblades

Switchblades with integral Arc-Strangler loadbreaking devices are available for use in NX type fuse mountings. Arc Strangler switchblades are designed to break load current only (up to 200A) and do not incorporate a fuse of any type for overload or fault interruption.

Surge Arresters

WARNING: Hazardous voltage. Can cause severe injury, death, or damage to equipment. De-energize transformer from a remote upstream source before servicing or operating surge arresters or disconnect switches. Check that all transformer terminals and bushings have zero voltage. Ground transformer following industry accepted safe grounding practices.

CAUTION: Excessive test voltage can damage surge arresters. Disconnect surge arresters before running impulse or applied potential tests on the transformer.

Surge arresters are used in three-phase padmounted transformers to protect underground distribution equipment and cable from overvoltage surges. During steady state conditions, line-to-ground voltage is applied continuously across the arrester terminals. When surges occur, the arrester immediately limits the overvoltage to the required protective level by conducting the surge current to ground. Upon passage of the surge, the arrester returns to its initial state, conducting minimal leakage current.

Surge arresters should be installed only on systems where the power frequency voltage at the arrester does not exceed published maximum continuous operating voltage (MCOV) values.

The transformer should not be tested (impulse or applied potential) with the arrester connected. If connected during impulse tests, the arrester will clamp the discharge voltage applied by the test equipment. If the arrester is connected to the transformer during an applied potential test, there is a possibility that the arrester will be damaged. Disconnect surge arresters before tests are performed on the transformer. Arresters should be reconnected immediately after tests are completed.

Under-oil MOV Arrester

The Cooper Power Systems heavy duty distribution class under-oil MOV arrester is designed to be mounted inside the transformer tank (see Figure 27). Internal, under-oil mounting of the arrester prevents shortened arrester life due to surface contamination, wildlife damage, vandalism, or moisture ingress.

Under-oil arresters are designed to operate when submerged in oil. It is recommended that the average oil temperature not exceed 90°C and that the maximum oil temperature not exceed 125°C.

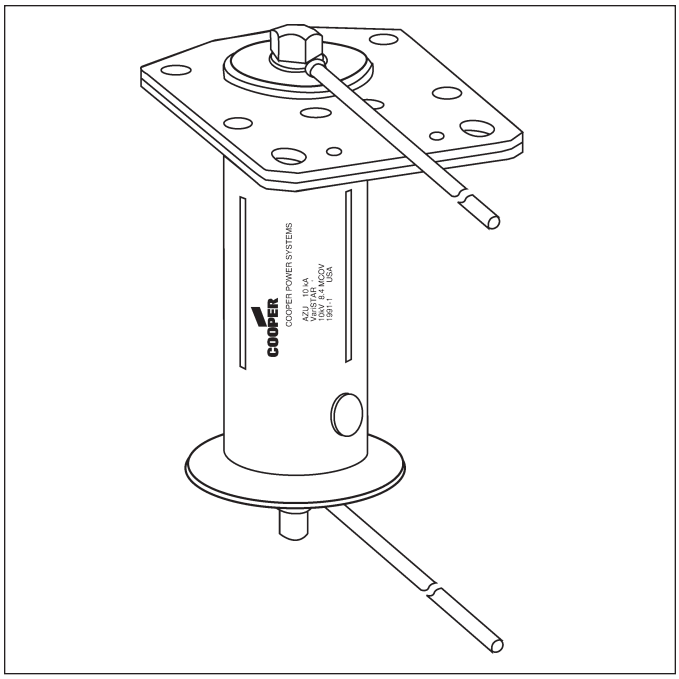

Figure 27.
Heavy Duty Distribution Class Under-oil MOV Arrester

Under-oil Arrester Disconnection During Test (with Arrester Disconnect Switch)

The Cooper Power Systems Arrester Disconnector provides a means of disconnecting and reconnecting an under-oil arrester ground for transformer testing. Separate disconnectors are used for each arrester in the transformer, and are located on the transformer faceplate.

The Arrester Disconnector is operated as follows:

Operating from closed to open position (see Figure 28):

1. Verify that tank is grounded. De-energize transformer from a remote upstream source. Ground all bushings and terminals.
2. Unscrew handle from shaft.
3. Re-attach small diameter end of handle to shaft.
4. Push handle and shaft toward transformer until shaft flange (adjacent to handle) is flush to sealing gland.
5. Transformer is now ready for Impulse or Applied Potential testing.

Operating from open to closed position:

1. Verify that tank is grounded. De-energize transformer from a remote upstream source. Ground all bushings and terminals.
2. Pull handle and shaft away from transformer completely.
3. Unscrew handle and re-attach with large diameter end toward the transformer. To assure good ground contact, the handle should be re-tightened by rotating handle 3/4 to 1 turn after handle has come in contact with seal gland.

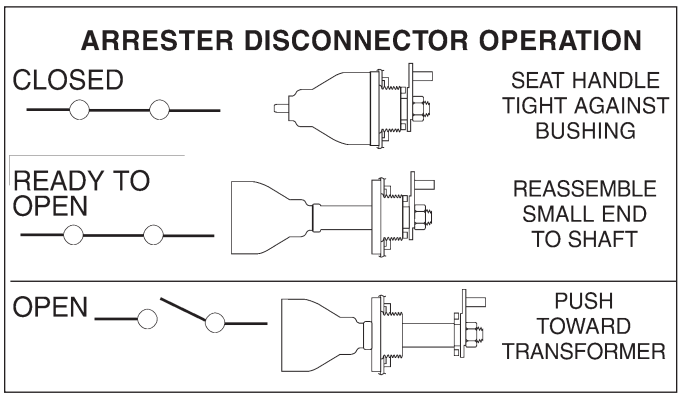

Figure 28.
Arrester Disconnector Operation

Under-oil Arrester Disconnection During Test (without Arrester Disconnect Switch)

CAUTION: Before opening the transformer tank for internal maintenance, read the Insulating Liquid Maintenance section in this manual. This section explains safety precautions that should be taken and gives instructions on how to prevent insulating liquid contamination.

To disconnect arresters without a disconnect switch:

1. Verify that tank is grounded. De-energize transformer from a remote upstream source. Ground all bushings and terminals.
2. Remove tank cover following procedures in Tank Cover Removal and Installation section of this manual.
3. Locate arrester ground lead pad (see Figure 29) attached to tank wall.
4. Disconnect arrester ground leads from ground lead pad and separate leads ends a minimum of 5” from each other and from any part of the transformer.
5. Transformer is now ready for impulse or applied potential testing.

To reconnect:

1. Reconnect arrester ground leads to ground lead pad.
2. Re-install tank cover as outlined in Tank Cover Removal and Installation section of this manual.

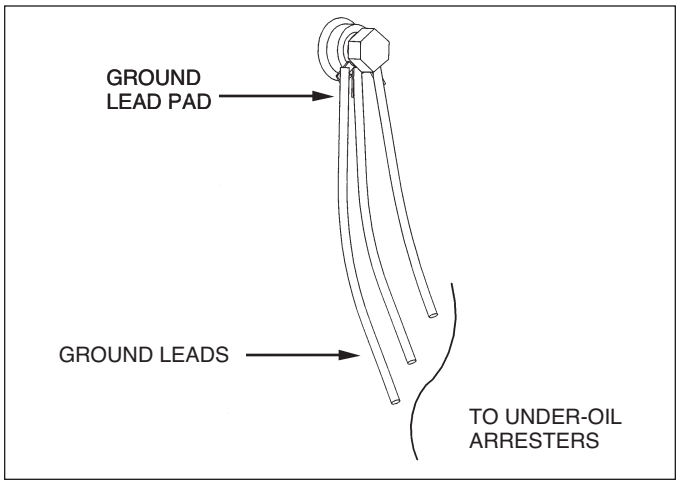

Figure 29.
Under-oil Arrester Jumper Ground Lead Pad with Ground Leads

External Arrester

External surge arresters ordered with the transformer must be installed and connected in the field before the transformer is put into service.

Arrester and tank ground connections must be completed before the transformer is connected to the high voltage or low voltage lines. Proper connection places the arrester in a direct shunt relationship to the transformer insulation.

MAINTENANCE

Exterior Maintenance

On an annual or more frequent interval, inspect all exposed surfaces for evidence of tampering, battered metal, gouges, etc. Dents or deformities should be repaired at once. Scratched or weathered paint or protective coatings should be touched up promptly.

Keep the area around the transformer clean. Do not store tools, materials or equipment on or against the transformer.

Cabinet Interior Maintenance

WARNING: Hazardous voltage. Can cause severe injury, death, or damage to equipment. De-energize transformer from a remote upstream source before opening cabinet and doing cabinet interior inspection or maintenance. Check that all transformer terminals and bushings have zero voltage. Ground transformer following industry accepted safe grounding practices.

Periodically inspect the terminal compartment interior and all operating equipment. Check all gauges and controls for proper operation. Repair or replace damaged or defective equipment.

Inspect drain cocks, plugs, fuse mountings, and switches. Look for evidence of insulating liquid seepage around tank-wall gaskets, seals, etc. Repair as required.

Replacement of gaskets or seals in the tank wall may require that the tank be opened and the insulating liquid lowered to the appropriate level. For instruction on opening the tank and for draining and replacing the insulating liquid, refer to the Insulating Liquid Maintenance section in this manual.

Tank Internal Maintenance

(For Envirotran™ Transformers see the Envirotran Transformers section of this manual before continuing)

CAUTION: Elevated Pressure. Can cause personal injury or damage to transformer. Release internal pressure with pressure relief device before removing tank cover, manhole cover or handhole cover.

WARNING: Hazardous voltage. Can cause severe injury, death, or damage to equipment. De-energize transformer from a remote upstream source before opening cabinet and doing internal tank inspection or maintenance. Check that all transformer terminals and bushings have zero voltage. Ground transformer following industry accepted safe grounding practices.

Service to bushings or equipment inside the transformer tank will require that the tank be opened and the insulating liquid lowered to the appropriate level. Before opening the transformer tank, read the Insulating Liquid Maintenance section in this manual. The Liquid Maintenance section explains safety precautions that should be taken and gives instructions on how to prevent insulating liquid contamination. Precautions must be taken to prevent dirt or moisture from entering the opened transformer tank. Contamination of the insulating liquid will prevent the transformer from operating properly and may cause serious damage to the transformer.

Three-phase padmounted transformers may have either bolt-on or weld-on main tank covers. Bolt-on covers can

be removed to access the tank interior. Access to the interior of a transformer with a weld-on tank cover is typically through a manhole/handhole. To gain additional internal access to tanks with weld-on tank covers, the tank cover must be cut open.

Tank Cover Removal and Installation

(For Envirotran Transformers see the Envirotran Transformers section of this manual before continuing)

CAUTION: Elevated Pressure. Can cause personal injury or damage to transformer. Release internal pressure with pressure relief device before removing tank cover, manhole cover or handhole cover.

WARNING: Hazardous voltage. Can cause severe injury, death, or damage to equipment. De-energize transformer from a remote upstream source before opening cabinet and doing internal tank inspection or maintenance. Check that all transformer terminals and bushings have zero voltage. Ground transformer following industry accepted safe grounding practices.

Transformers that have been system-connected should be de-energized, grounded, and disconnected before being opened for inspection.

If the tank seal is broken, it is recommended that a leak test be performed to verify that the tank is properly sealed. To leak test, remove the pressure relief device and pressurize the headspace. The test pressure should not exceed 7 psig. The established pressure should be maintained for at least four hours to insure that all the seals are proper.

Bolt-On Tank Cover Removal

Transformer tanks are factory-sealed to prevent ingress of ambient air and moisture. Do not open under any precipitation conditions.

1. Verify that tank is grounded. De-energize transformer from a remote upstream source. Ground all bushings and terminals before removing cover.
2. Thoroughly clean tank cover to help prevent contamination of insulating liquid when removing the cover. Remove all dirt, grease, and moisture.
3. From within the cabinet, remove the hardware (3/8” nuts using a 9/16” socket) which attaches the cover nutguard to the faceplate.
4. Relieve internal tank pressure by operating the pressure relief valve. Remove the hardware (3/8” nuts using a 9/16” socket) which attaches the cover to the tank.
5. Gently pry the cover upward. Do not allow the cover gasket to come in contact with the transformer insulating liquid. Allowing the gasket to contact the liquid will make it slippery and difficult to hold in position during cover installation. Lift cover straight up to prevent damage to cover, bolts, and tank gasket.
6. Note the location and orientation (up/down) of each gasket section as they are removed from the tank flange so that they can be reinstalled properly.

Bolt-On Tank Cover Installation

1. Return the gasket sections to their original positions and orientation.
2. Re-install the cover, using 25 ft-lbs. torque to tighten the cover hardware. After installing all the nuts, re-torque each nut to ensure proper torque is achieved.
3. Remove the pressure relief valve and pressurize the headspace through the pressure relief valve coupling to ensure that there are no leaks. Test pressure should not exceed 7 psig. Established pressure should be maintained for at least four hours to insure that all seals are proper.
4. Re-install the nutguard using 25 ft-lbs. torque to tighten nutguard access hardware.
5. Re-install pressure relief valve.

Bolt-On Manhole/Handhole Cover Removal

Transformer tanks are factory-sealed to prevent ingress of ambient air and moisture. Do not open under any precipitation conditions.

1. Verify that tank is grounded. De-energize transformer from a remote upstream source. Ground all bushings and terminals before removing cover.
2. From within cabinet, remove hardware (3/8” nuts using a 9/16” socket) attaching manhole/handhole access cover to cabinet.
3. Remove manhole/handhole access cover.
4. Thoroughly clean tank and manhole/handhole cover to help prevent contamination of insulating liquid when removing manhole/handhole cover. Remove all dirt, grease, and moisture.

5. Relieve internal tank pressure by operating pressure relief valve.
6. Remove hardware (3/8” nuts using a 9/16” socket) attaching manhole/handhole cover to tank.
7. Gently pry cover upward. Do not allow cover gasket to come in contact with transformer insulating liquid. Allowing the gasket to contact the liquid will make it slippery and difficult to hold in position during cover installation. Lift cover straight up to prevent damage to cover, bolts, and tank gasket.
8. Note location and orientation (up/down) of each gasket section as they are removed from tank flange so they can be re-installed properly.

Bolt-On Manhole/Handhole Cover Installation

1. Return gasket sections to their original positions and orientation.
2. Re-install manhole/handhole, using 25 ft-lbs. torque to tighten hardware. After installing all nuts, re-torque each nut to ensure proper torque is achieved.
3. Remove pressure relief valve and pressurize headspace through pressure relief valve coupling to ensure that there are no leaks. Test pressure should not exceed 7 psig. Established pressure should be maintained for at least four hours to ensure that all seals are proper.
4. Re-install access cover using 25 ft-lbs. torque to tighten access cover hardware.
5. Re-install pressure relief valve.

Weld-On Tank Cover Removal

WARNING: Explosive gas. Can cause severe injury, death, or damage to equipment. Before cutting open a weld-on tank cover, fill tank headspace with nitrogen gas. Keep nitrogen gas flowing while cutting. Keep tank headspace filled with nitrogen until cutting is finished.

Transformer tanks are factory-sealed to prevent ingress of ambient air and moisture. Do not open under any precipitation conditions.

Explosive gases can develop inside a transformer tank headspace during the life of the transformer. It is strongly recommended that weld-on cover removal be done only in a controlled repair facility by experienced maintenance personnel. To prevent explosions, the following procedures must be followed during weld-on cover removal:

1. Verify that tank is grounded. De-energize transformer from a remote upstream source. Ground all bushings and terminals before removing cover.
2. Relieve internal tank pressure by operating pressure relief valve.
3. Remove manhole/handhole cover as outlined in the Tank Cover Removal and Installation section of this manual.
4. Drain insulating liquid to the top of core clamp as outlined in the Insulating Liquid Maintenance section of this manual.
5. Allow transformer to sit with manhole/handhole removed for a minimum of 24 hours to allow explosive gases to escape.
6. Place a rubberized blanket on top of core clamp and completely cover core/coil assembly to protect core/coil assembly from weld spatter contamination during cover cutting.
7. Remove pressure relief valve and attach a nitrogen source in its place.
8. Fill headspace with nitrogen with manhole/handhole cover still removed. Nitrogen gas will help prevent a volatile gas explosion while tank cover is being cut off.
9. While continuing to keep nitrogen flowing into the headspace, use carbon air arc machinery or a hard-wheel grinder to cut cover weld.
10. Thoroughly clean tank cover to help prevent contamination of insulating liquid when removing cover. Remove all dirt, grease, and moisture.
11. Remove tank cover from tank.

Weld-On Tank Cover Installation

1. Grind smooth and then clean cover, removing all weld spatter accumulated during cover removal.
2. It is recommended that the tank weld rope gasket be replaced around the tank lip prior to re-installing cover. The tank weld rope gasket helps prevent weld spatter from entering the tank during cover weld. The rubberized blanket installed during cover removal should still be covering the core/coil assembly.
3. Re-position cover on tank.
4. Fill headspace with nitrogen through pressure relief valve coupling, with manhole/handhole still removed.
5. Continue to keep nitrogen source flowing into headspace, and weld cover fully around the tank lip.

6. Remove rubberized blanket that was installed during cover removal.
7. Refill insulating liquid as outlined in Insulating Liquid Maintenance section of this manual.
8. Re-install manhole/handhole cover as outlined in Tank Cover Removal and Installation section of this manual.
9. Pressurize headspace through pressure relief valve coupling to insure that there are no leaks. The test pressure should not exceed 7 psig. The established pressure should be maintained for at least four hours to ensure that all seals are proper.
10. Re-install pressure relief valve.

Bushing Removal and Replacement

1. Verify that tank is grounded. De-energize transformer from a remote upstream source. Ground all bushings and terminals before performing maintenance on bushings.
2. Open tank by removing tank cover or manhole/handhole cover as outlined in Tank Cover Removal and Installation section of this manual.
3. Lower insulating liquid level as outlined in Insulating Liquid Maintenance section of this manual. Lower liquid level to completely expose the bushing.
4. Disconnect all internal and external cable and leads. Note position of all nuts, flat washers, spring washers, etc., so they can be re-installed in same locations.
5. Remove all bushing clamp hardware, noting position of all nuts, flat washers, spring washers, etc., so they can be re-installed in same locations.
6. Remove external bushing clamp, bushing, and gasket.
7. Install a new bushing and gasket. Center bushing and gasket to obtain an effective seal. Install exterior bushing clamp and clamp hardware. Tighten clamp nuts per torque specified in Table 1.
8. Re-connect all external and internal cables and leads. Replace all nuts, flat washers, spring washers, etc., in their original position. Tighten all connections per torque specified in Table 1.
9. Restore insulating liquid to appropriate level as outlined in Insulating Liquid Maintenance section of this manual. Close, reseal, and leak test tank as outlined in the Tank Cover Removal and Installation section of this manual. Inspect bushing-to-tank seal for leaks or seepage.

Bushing Clamps	
Clamp Type	**Hardware Tightening Torque**
Cast Aluminum Clamp	70-80 in-lbs.
Molded Polymer Tri-Clamp	40-60 in-lbs.
All other 3 & 4 hole Clamps	40-60 in-lbs.

Bushings With Internal Spade Connections	
Bushing Hardware	**Hardware Tightening Torque**
1/2” Steel (Grade 8)	50 ft-lbs.
3/8” Steel (Grade 8)	50 ft-lbs.

Bushings With Internal Stud Connections	
Bushing Hardware	**Hardware Tightening Torque**
3/8”-16 Brass Nuts	16 ft-lbs.
5/8”-11 Aluminum Nuts	60 ft-lbs.
5/8”-11 Brass Nuts	75 ft-lbs.
1”-14 Brass Nuts	121 ft-lbs.
Bushing Lead Block, 1/2” Steel Hardware	110 ft-lbs.

Table 1.
Bushing Hardware Tightening Torque

Cabinet Removal and Installation

Cabinet Removal

CAUTION: Potential Falling Object. Can cause personal injury or damage to transformer. Do not open cabinet doors when cabinet is removed from transformer tank. Opening cabinet doors will cause cabinet to fall forward.

WARNING: Hazardous voltage. Can cause severe injury, death, or damage to equipment. De-energize transformer from a remote upstream source before opening cabinet and doing cabinet interior inspection or maintenance. Check that all transformer terminals and bushings have zero voltage. Ground transformer following industry accepted safe grounding practices.

1. Verify that tank is grounded. De-energize transformer from a remote upstream source. Ground all bushings and terminals before performing maintenance on cabinet.

2. Place one 1/4 to 3/8 inch shim directly below faceplate on both sides of tank at points A and A' (see Figure 30).
3. Place one 1 1/2 inch wedge under each side of cabinet at points B and B' to relieve strain on the cabinet.
4. Note position and orientation of gasket that is between top of cabinet and tank so it can be re-installed in same fashion.
5. Disconnect HV-LV barrier from vertical bracket of faceplate.
6. Remove hardware attaching cabinet to faceplate on left and right sides of faceplate. Note position of all nuts, flat washers, spring washers, etc., so they can be re-installed in same locations.
7. Fully close HV and LV doors.
8. Slide cabinet assembly away from tank.

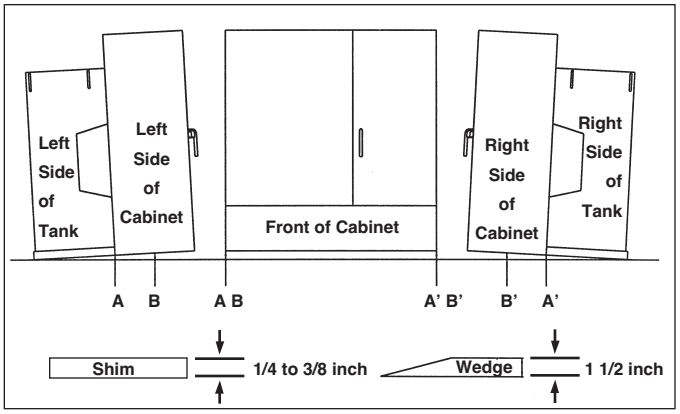

Figure 30.
Cabinet Removal Diagram

Cabinet Installation

Reverse removal procedure to re-install cabinet. Re-attach cabinet using shims under front of tank and wedges under sides of cabinet, making sure cabinet gasket is inserted into cabinet back channel prior to attaching cabinet. Tighten cabinet hardware to 20 ft-lbs. torque.

Insulating Liquid Maintenance

Transformer tanks are factory-sealed to prevent ingress of ambient air and moisture. Do not open under any precipitation conditions.

If it is necessary to drain and refill the transformer, special care should be taken to avoid the entrapment of gas bubbles in the system. Gas bubbles have lower dielectric integrity than the insulating liquid and will degrade the performance characteristics of the insulating system.

Conventional Oil-Filled Transformers

Refer to ANSI C57.106, "Guide For Acceptance and Maintenance of Insulating Oil in Equipment", for additional guidelines when testing and handling conventional transformer oil. Periodic maintenance tests should be performed.

R-Tran® Transformers

R-Tran transformers are filled with R-Temp fluid. R-Temp fluid is a non-toxic, readily biodegradable, less-flammable (high fire point), high molecular weight hydrocarbon dielectric fluid.

Refer to IEEE C57.121, "Guide for Acceptance and Maintenance of Less Flammable Hydrocarbon Fluids in Transformers." Periodic maintenance tests should be performed on the same schedule as would be used for transformers of similar application filled with conventional transformer oil.

Request Cooper Power Systems Bulletin 97038 or contact your factory representative for additional handling guidelines for R-Temp fluid.

Mixtures of R-Temp Fluid and Conventional Transformer Oil

R-Temp fluid is fully miscible with conventional transformer oil. There is no known detrimental performance impact when R-Temp fluid is mixed with conventional transformer oil. Conversely, except for some reduction in flash and fire points, the same is true for conventional transformer oil mixed with R-Temp fluid. Conventional transformer oil content of >3% in R-Temp fluid lowers the fire point below 300°C. Measure the ASTM flash and fire points if the presence of conventional transformer oil is suspected. If flash or fire points fall below the minimum values required, retrofilling may be required.

Envirotran Transformers

Envirotran transformers are filled with Envirotemp FR3 fluid. Envirotemp FR3 fluid is a less-flammable (high fire point) dielectric fluid based on edible seed oils.

Periodic maintenance should be performed on the same schedule as would be used for transformers of similar application filled with conventional transformer oil. Basic recommended tests for Envpirotemp FR3 fluid are dielectric strength, moisture content, and flash and fire points.

Envirotran transformer tanks are shipped from the factory with a dry nitrogen-filled headspace. Internal pressure should not be equalized with atmosphere by

manually opening the pressure relief valve device unless access to Bay-o-Net fuses or other internal tank components is required.

If Internal Service is Required

If the tank cover or manhole/handhole must be removed for internal service, exposure time to ambient air should be minimized. Avoid exposure times greater than 24 hours. Immediately after service is completed, replace the cover or manhole/handhole. The tank headspace must then be purged and recharged with dry nitrogen. Envirotran transformers are equipped with two 1/4" fill valves on the upper left and upper right corners of the face plate and are intended for the recharging process. The following steps should be followed when purging and recharging Envirotran transformers:

1. Verify that tank is grounded. De-energize transformer from a remote upstream source. Ground all bushings and terminals.
2. Release internal pressure by operating pressure relief device.
3. Fill headspace with dry nitrogen through one of the 1/4" fill valves to a pressure of 2-3 psig.
4. Release internal pressure by operating pressure relief device.
5. Refill headspace with dry nitrogen through one of the 1/4" fill valves to a pressure of 2-3 psig. Internal pressure must be maintained for at least four hours prior to transformer energization to verify seal integrity.

Bay-O-Net Fuse Replacement

When replacing fuses in Flapper™ style Bay-O-Net fuse assembles, refer to Bay-O-Net Fuse Re-Fusing Instructions in this manual. Follow the same procedure as with conventional oil-filled transformers.

Mixtures of Envirotemp FR3 Fluid and Conventional Transformer Oil

Envirotemp FR3 fluid is fully miscible with conventional transformer oil. There is no known detrimental performance impact when Envirotemp FR3 fluid is mixed with conventional transformer oil. Conversely, except for some reduction in flash and fire points, the same is true for conventional transformer oil mixed with Envirotemp FR3 fluid. Conventional transformer oil content of >7% in Envirotemp FR3 fluid lowers the fire point below 300°C. Measure the ASTM flash and fire points if the presence of conventional transformer oil is suspected. If flash or fire points fall below the minimum values required, retrofilling may be required. To maintain its exceptional environmental classification, mixing of Envirotemp FR3 dielectric coolant with any other fluids should be avoided.

Request Cooper Power Systems Bulletin 99048 or contact your factory representative for additional handling guidelines for Envirotemp FR3 fluid.

Sampling Insulating Liquid

Before sampling the insulating liquid, verify that tank is grounded. De-energize the transformer from a remote upstream source. Ground all bushings and terminals.

Refer to ASTM D923 "Standard Practices for Sampling Electrical Insulating Liquids" for sampling techniques.

A sample of the liquid should be taken when the liquid temperature is equal to or greater than the surrounding air to avoid condensation of moisture on the liquid.

Containers used for sampling liquid should be clean and dry large mouth glass bottles. Make sure that the liquid being sampled is representative of the liquid in the unit. Sufficient liquid must first be drawn off to ensure that the sample will be from the bottom of the tank, and not the liquid stored in the sampling pipe

Testing Insulating Liquid

For the dielectric strength of the insulating liquids, follow the technique as specified by ASTM D877, "Standard Test Method for Dielectric Breakdown Voltage of Insulating Liquids Using Disk Electrodes".

If the dielectric strength of the liquid drops below 26kV, it should be filtered until it tests at 26kV or better.

Filtering Insulating Liquid

Conventional transformer oil, R-Temp, or Envirotemp FR3 fluids can be filtered by means of a filter press. The filter press is effective for removing all types of foreign matter, including finely divided carbon and small amounts of moisture. The purifier equipment consists of a specifically proportioned filter press, a positive volume gear pump, driving motor, combined drip pan and mixing tank, necessary piping, valves, strainer, gauges and drying oven. Follow manufacturer's instructions for purifier equipment operation.

Filtration should be continued until the dielectric test of the insulating liquid is 26kV or better.

When filtering R-Temp or Envirotemp FR3 fluid, the filtering equipment must be free of contaminants and other liquids. The presence of other liquids may alter the physical and electrical characteristics of R-Temp or Envirotemp FR3 fluid. This could result in a reduction of fire point.

Lowering Insulating Liquid Level

1. Verify that tank is grounded. De-energize transformer from a remote upstream source. Ground all bushings and terminals.

2. If cover removal is required, remove cover as outlined in Tank Cover Removal and Installation section of this manual.
3. Prepare a clean, dry storage container to receive liquid.
4. Use pumps and hoses that have not been contaminated by contact with dissimilar liquids. Use a metal or non-rubber hose. Oil dissolves the sulfur found in rubber and will prove harmful to conductor material.
5. Attach pump intake line to drain valve on transformer tank.
6. Place output line nozzle on bottom of storage container. Do not permit liquid to splash into receiving container. Splashing will introduce air and moisture into liquid.
7. Do not lower liquid below top of core clamp unless absolutely necessary. Exposing coils may allow moisture to contaminate coil insulation.

Restoring Insulating Liquid Level

If it is necessary to drain and refill the transformer, special care should be taken to avoid the entrapment of gas bubbles in the system. Sufficient time should be allowed between refilling and energization of the transformer to be sure that any gas bubbles created during the process have been dissipated.

1. Pump from bottom of temporary storage tank. Do not permit intake line to draw in air, since air bubbles will lower dielectric integrity of insulating system.

CAUTION: It may be necessary to add extra liquid to the storage container from a reserve supply to replace the small quantity lost in the pump and lines and to prevent aeration of replacement liquid.

2. To prevent aeration at hose output, locate hose output below liquid surface
3. Pump slowly. If tank cover is not attached to tank, fill transformer to fill line marked on inside of transformer faceplate. If the tank cover is attached to tank, liquid level gauge may be read directly. On transformers that are not gauge-equipped, liquid level should be filled to bottom edge of liquid level plug hole (see Figure 3).

Applicable Standards

1. ASTM D92, “Standard Test Method for Flash and Fire Points by Cleveland Open Cup.”
2. ASTM D877, “Standard Test Method for Dielectric Breakdown Voltage of Insulating Liquids Using Disk Electrodes.”
3. ASTM D923, “Standard Practices for Sampling Electrical Insulating Liquids.”
4. ANSI C57.106, “Guide For Acceptance and Maintenance of Insulating Oil in Equipment.”
5. IEEE C57.121, “Guide for Acceptance and Maintenance of Less Flammable Hydrocarbon Fluids in Transformers.”

Spare Parts and Service

We suggest that one spare set of gaskets for manhole/handhole and any gasket-type bushings be kept on hand. Other renewal parts may be ordered through your local factory representative. When ordering parts, describe to your factory representative the maintenance being performed or the problem experienced. Also, tell the factory representative the complete transformer catalog number and serial number listed on the transformer nameplate.

For additional information, contact:

COOPER POWER SYSTEMS
DISTRIBUTION TRANSFORMERS
1900 EAST NORTH STREET
WAUKESHA, WI 53188-3899
(262) 547-1251

For service-related inquiries, e-mail us at:

tpservicegroup@cooperpower.com

COOPER Power Systems

P.O. Box 1640
Waukesha, WI 53187
http://www.cooperpower.com

©2001 Cooper Industries, Inc.

Arc-Strangler,® Envirotemp,® Envirotran,® Kyle,® NX,® and R-Temp® are registered trademarks of Cooper Industries, Inc.
FR3™ is a trademark of Cooper Industries, Inc.

Ø2
00