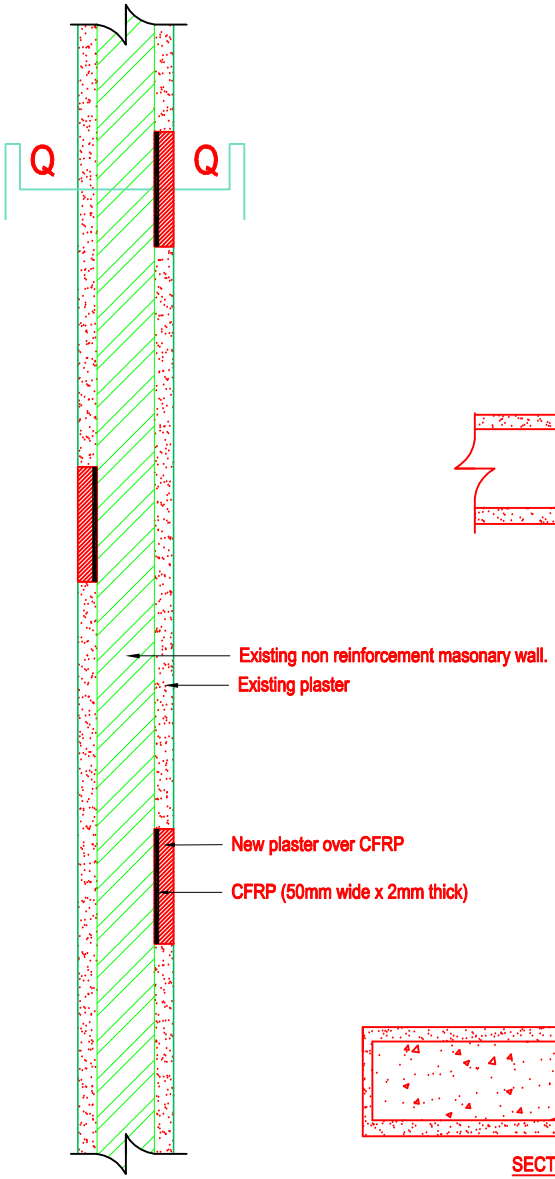

PLAN OF BRICK WALL

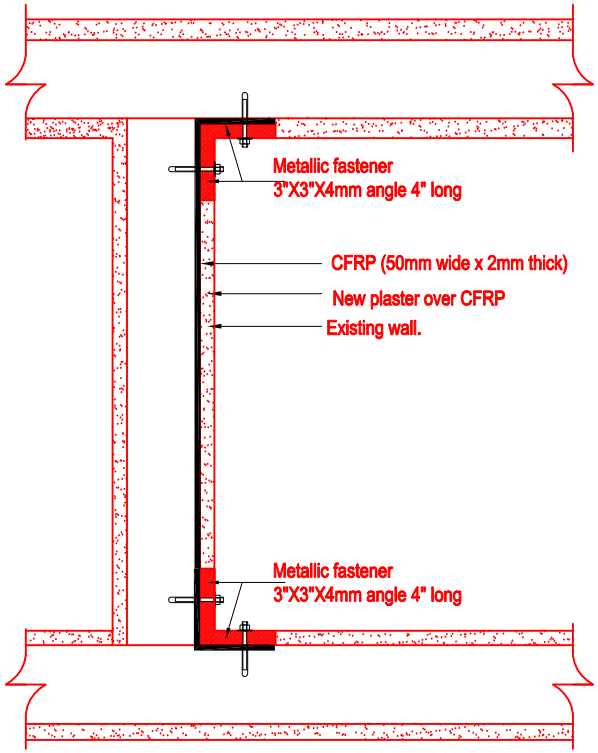

SECTION Q-Q

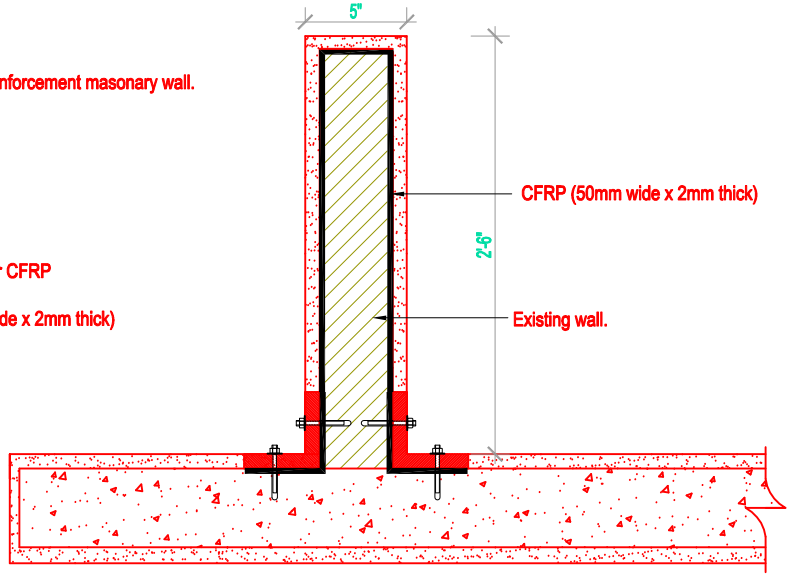

SECTION OF PARAPET WALL

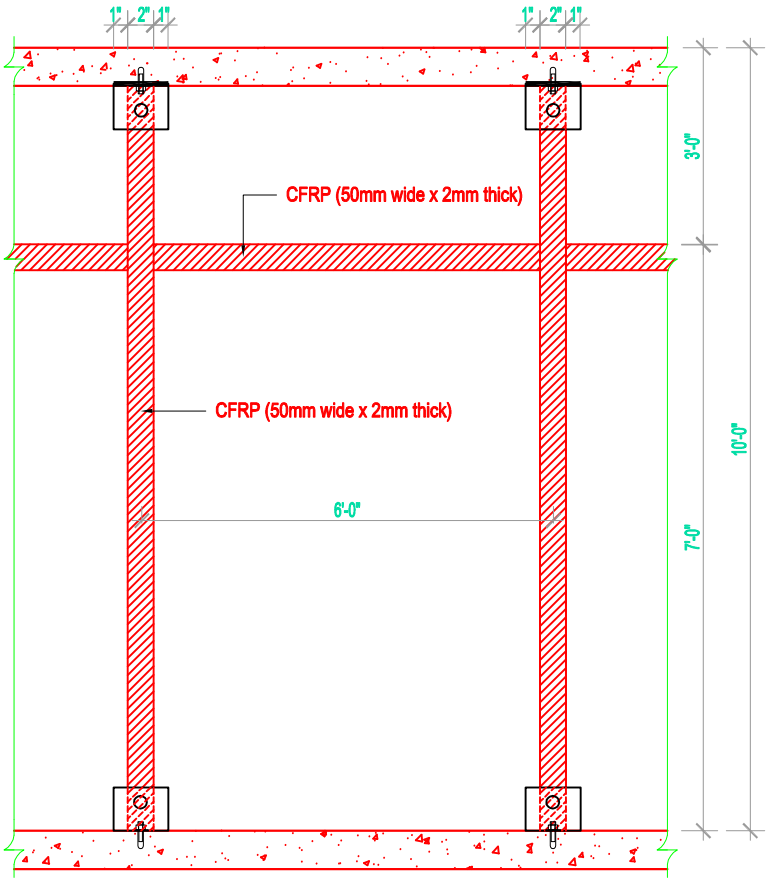

WALL ELEVATION

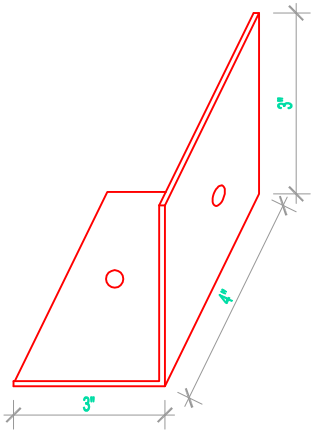

METALLIC FASTENER
3"X3"X4mm angle 4" long

USG STL RESIDENCE, GULSHAN, DHAKA

2-STORIED BUILDING (1-UNIT) HASNA HOUSE
HOUSE # NW (B) 21, ROAD # 65

RECTROFITING FOR NON-REINFORCED WALL & PARAPET

CONSULTANT:
WORLDWIDE ENGINEERS LIMITED
HOUSE # 67, ROAD # 15 , BLOCK # D, BANANI, DHAKA.-1213. BANGLADESH

ENGINEER	DRAWN	CHECKED	DATE
MEHEDI	ZAHID	DOWLA	13-09-14

SHEET NO. ST-09 REV. NO. 0