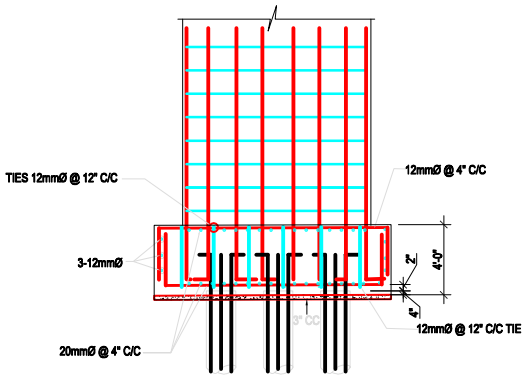

SECTION C-C

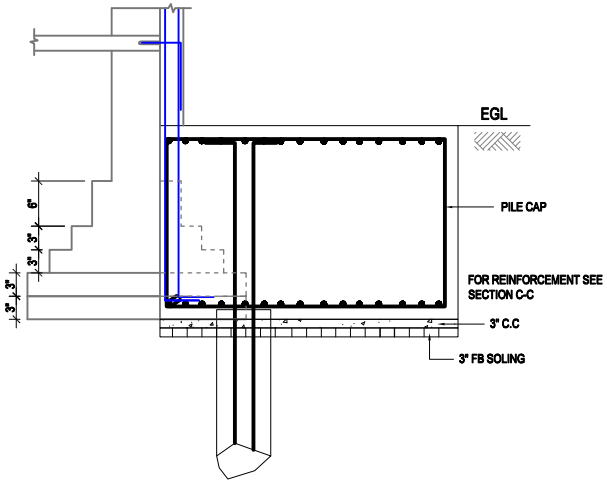

SECTIONAL ELEVATION (3-3)

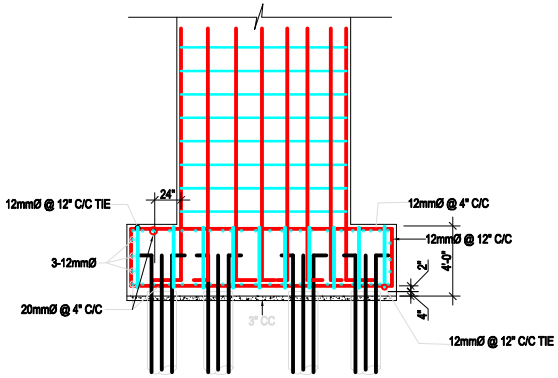

SECTION E-E

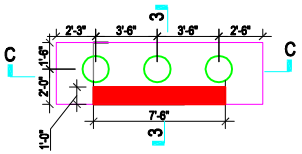

DETAIL OF PILE CAP P-3

(SHEAR WALL AT EAST CORNER)

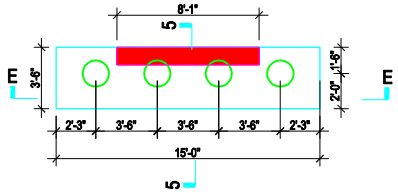

DETAIL OF PILE CAP P-5
(SHEAR WALL AT WEST CORNER)

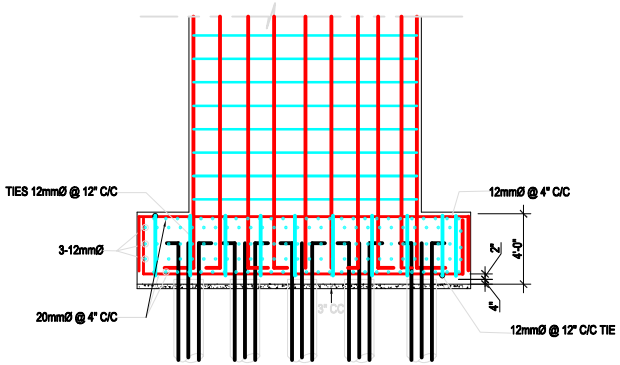

SECTION D-D

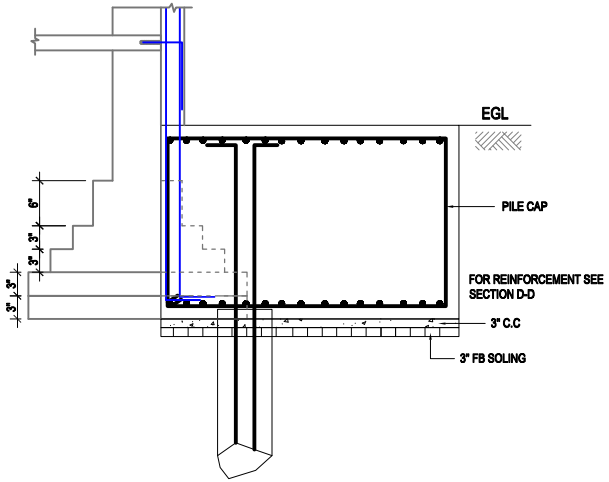

SECTIONAL ELEVATION (4-4)

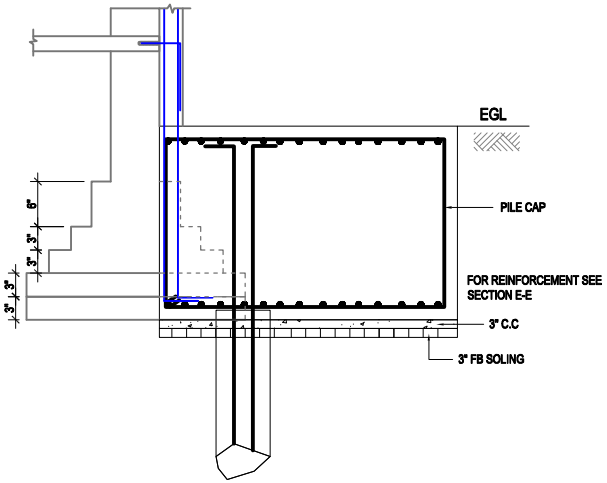

SECTIONAL ELEVATION (5-5)

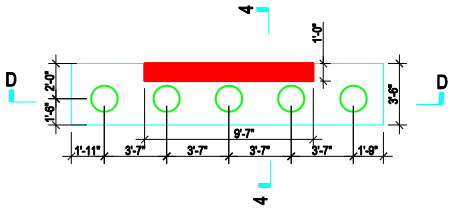

DETAIL OF PILE CAP P-4
(SHEAR WALL AT NORTH-EAST CORNER)

USG STL RESIDENCE, GULSHAN, DHAKA

2-STORIED BUILDING (1-UNIT) HASNA HOUSE
HOUSE # NW (B) 21, ROAD # 65

PILE CAP & SHEAR WALL DETAILS

CONSULTANT:
WORLDWIDE ENGINEERS LIMITED
HOUSE # 67, ROAD # 15 , BLOCK # D, BANANI, DHAKA.-1213. BANGLADESH

ENGINEER	DRAWN	CHECKED	DATE
MEHEDI	ZAHID	DOWLA	JUNE, 2014

SHEET NO. ST-07 | REV. NO. A, 21.8.14