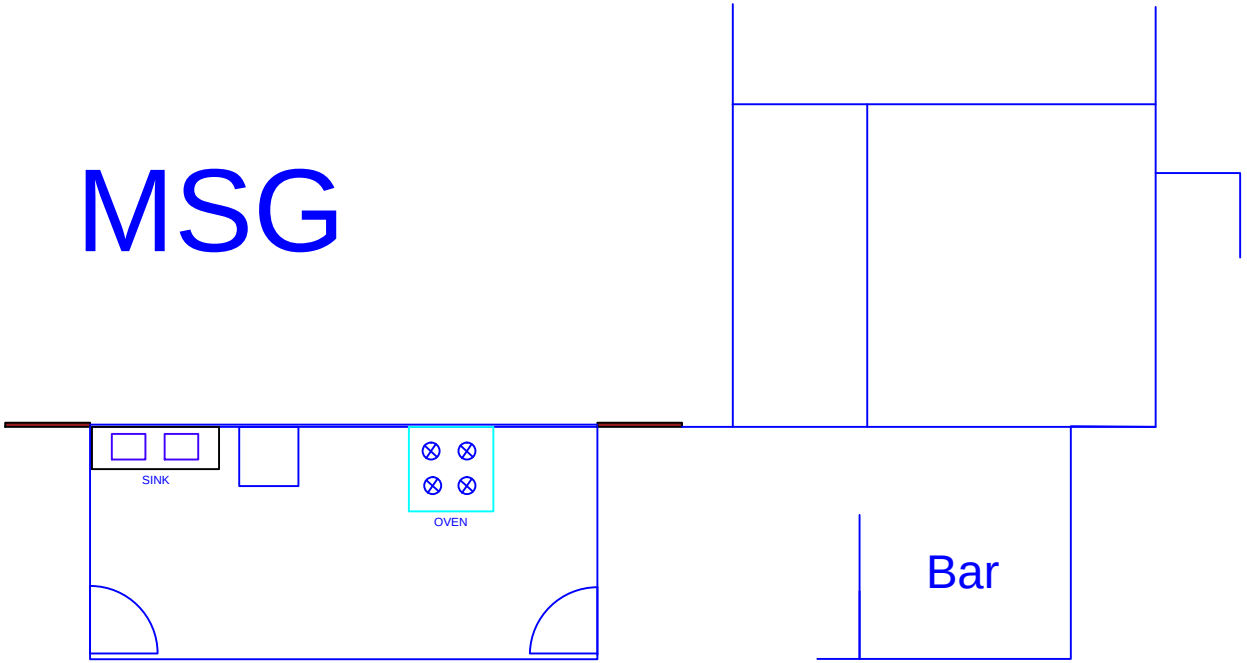

Swimming pool

1

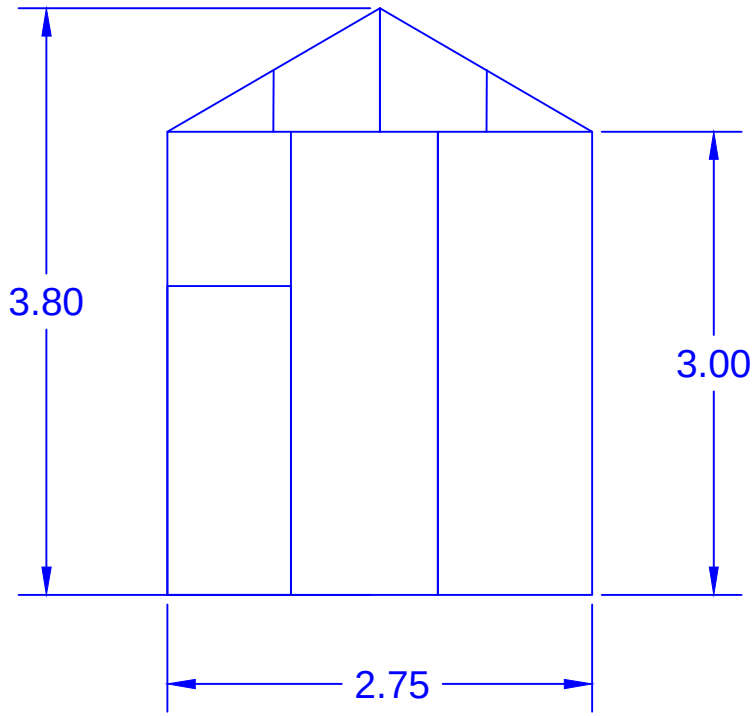

10

Front View

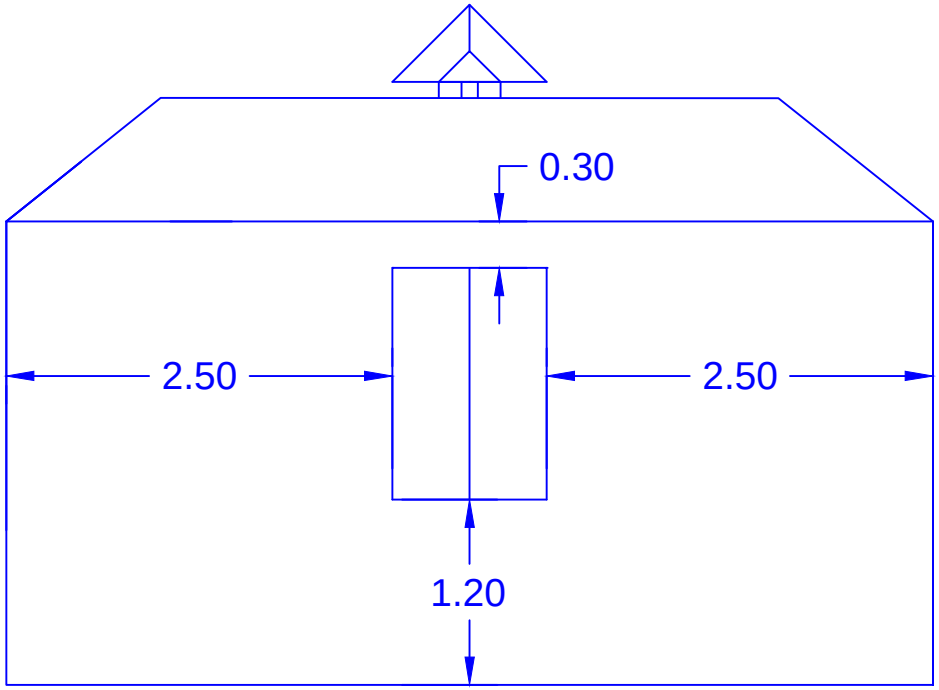

Window

11

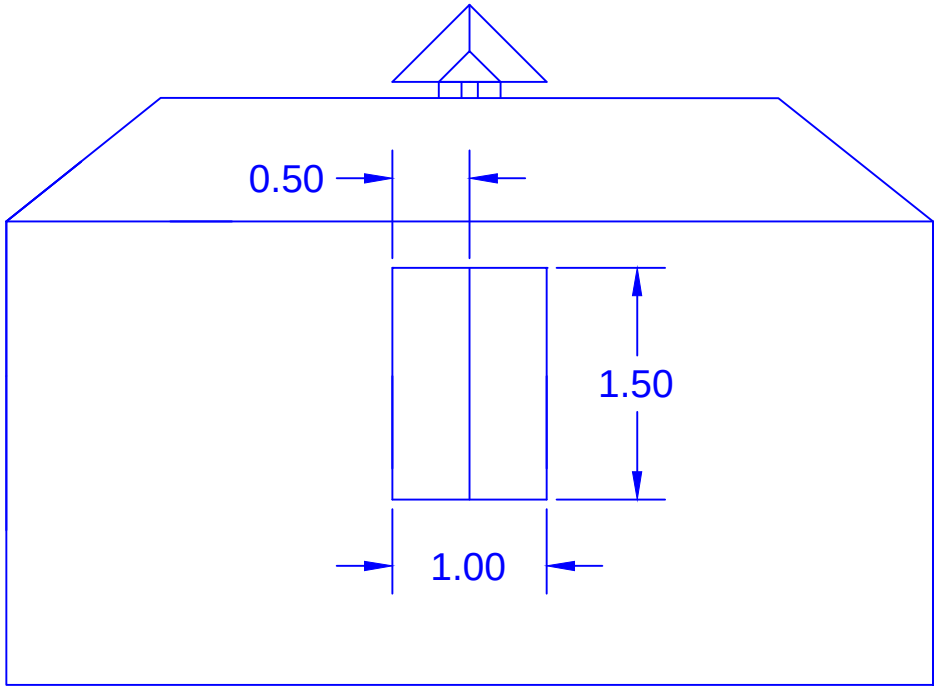

Window

12

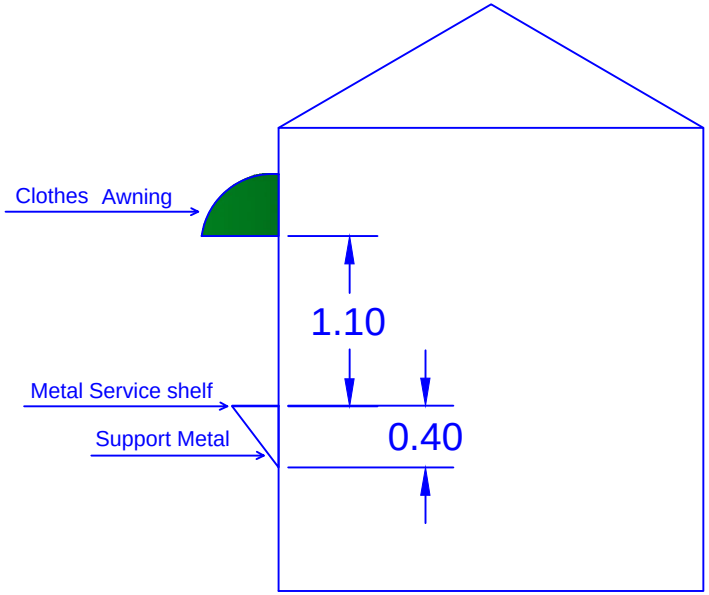

Front View

13

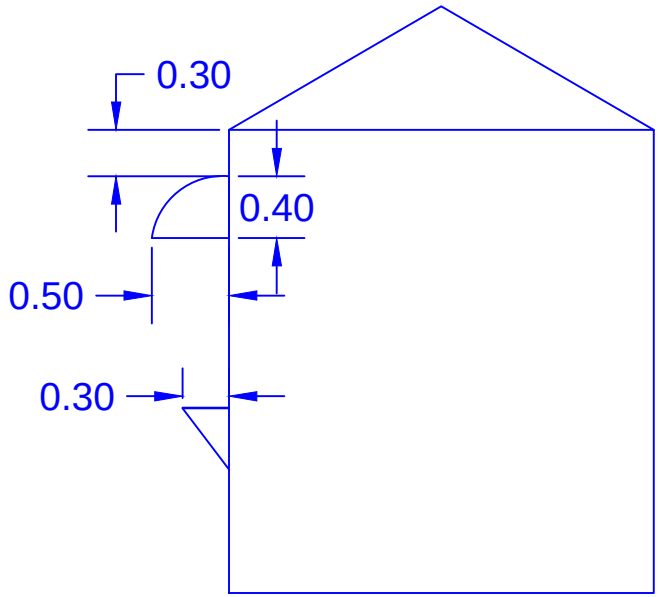

14

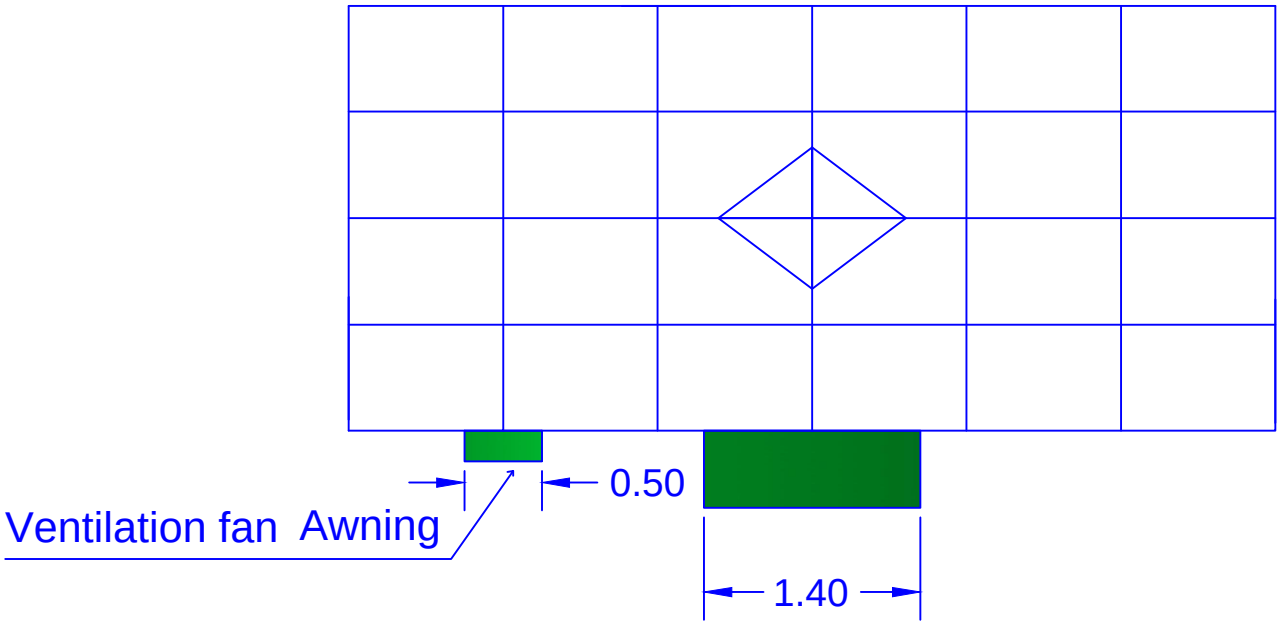

15

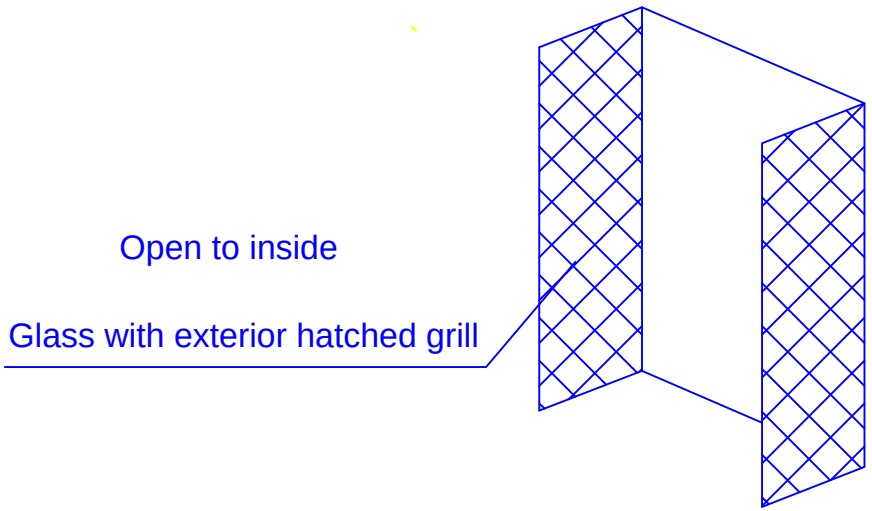
Open to inside
Glass with exterior hatched grill

Window

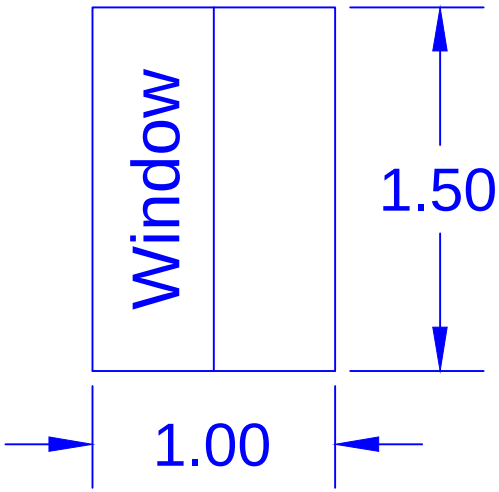
Window
1.50
1.00

16

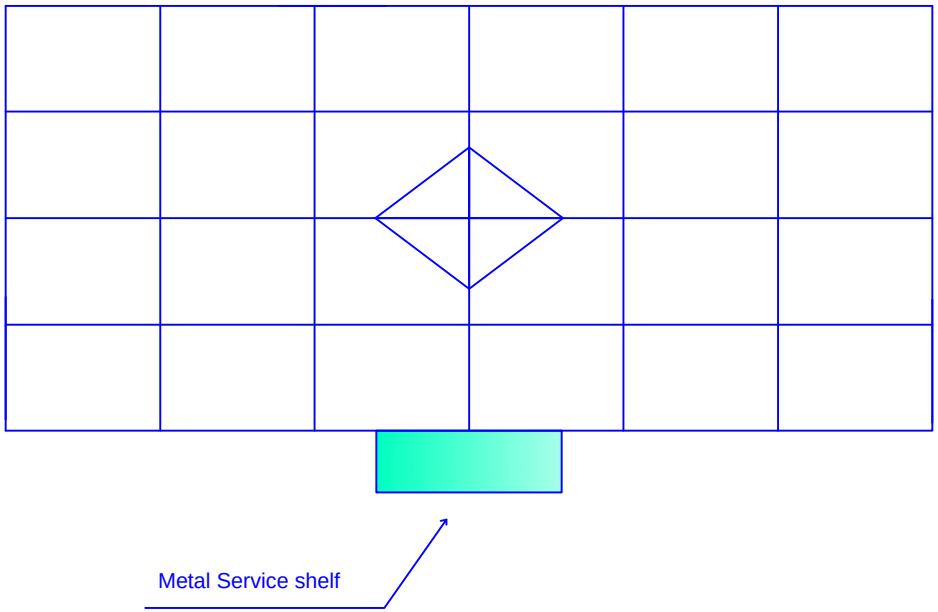

Top View

17

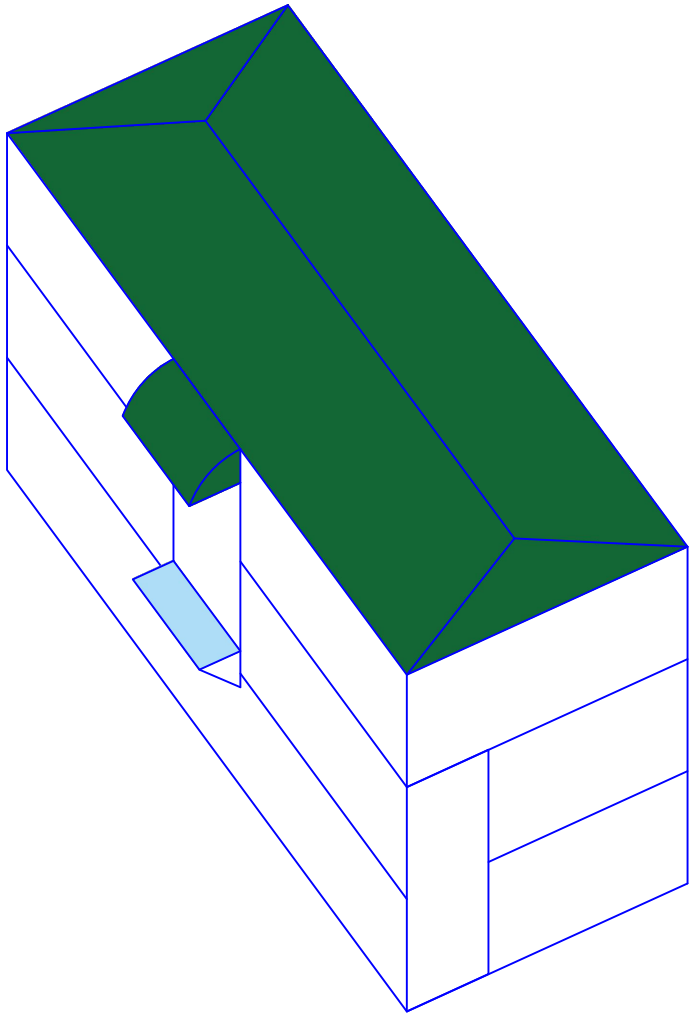

18

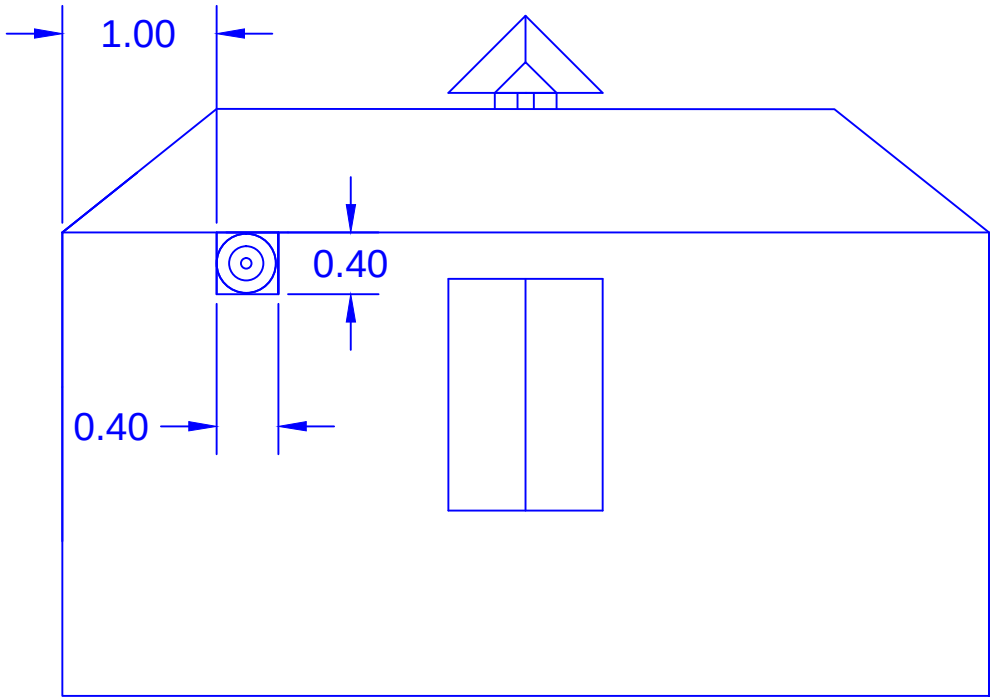

Ventilation fan

19

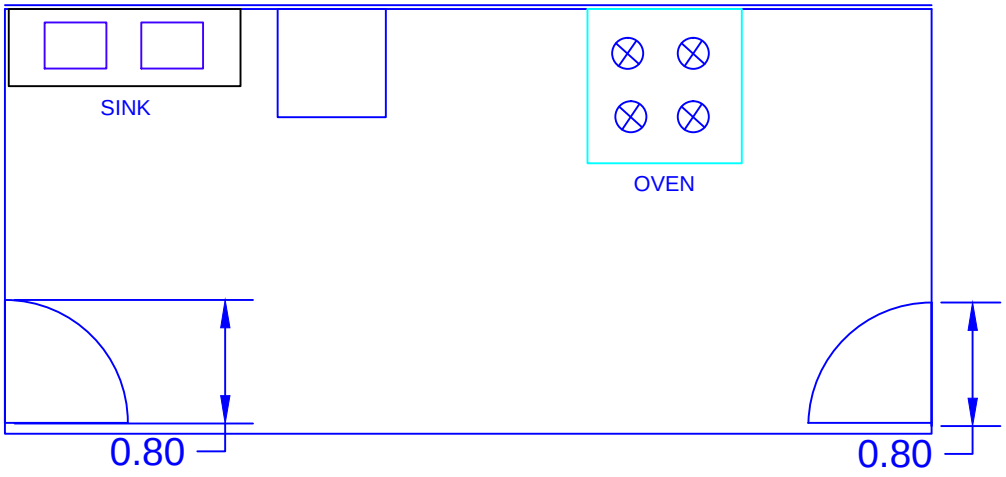

2

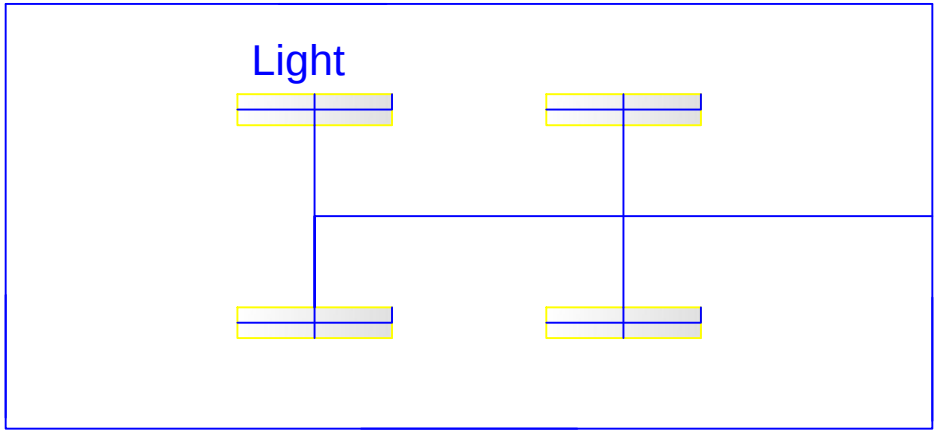

20

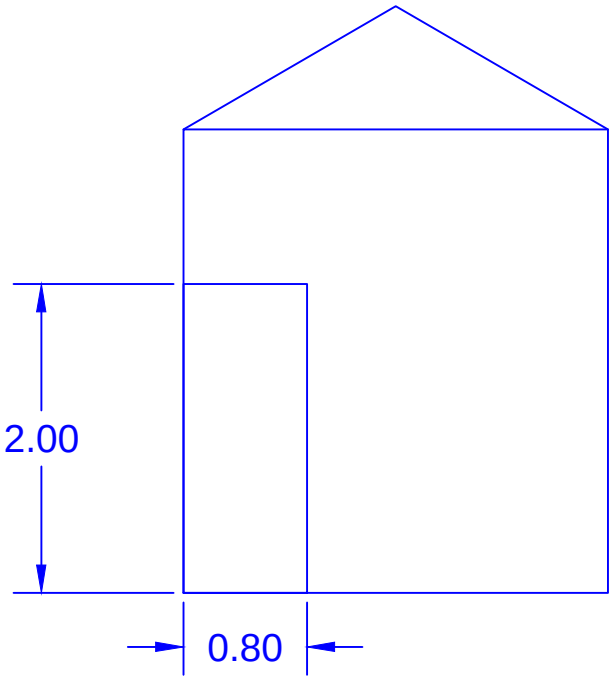

Door

21

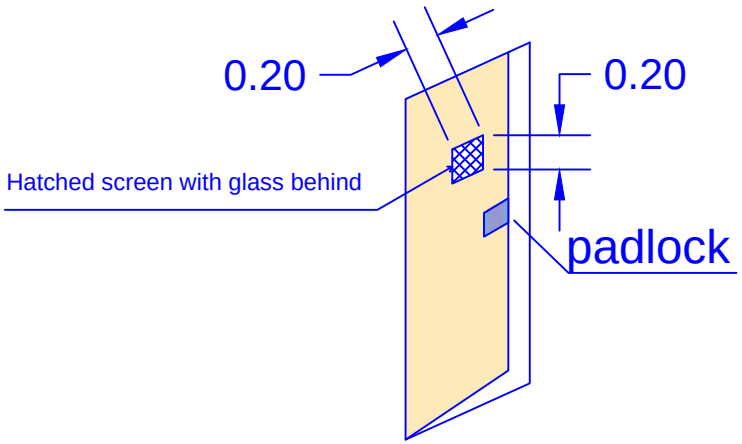

metal Door

22

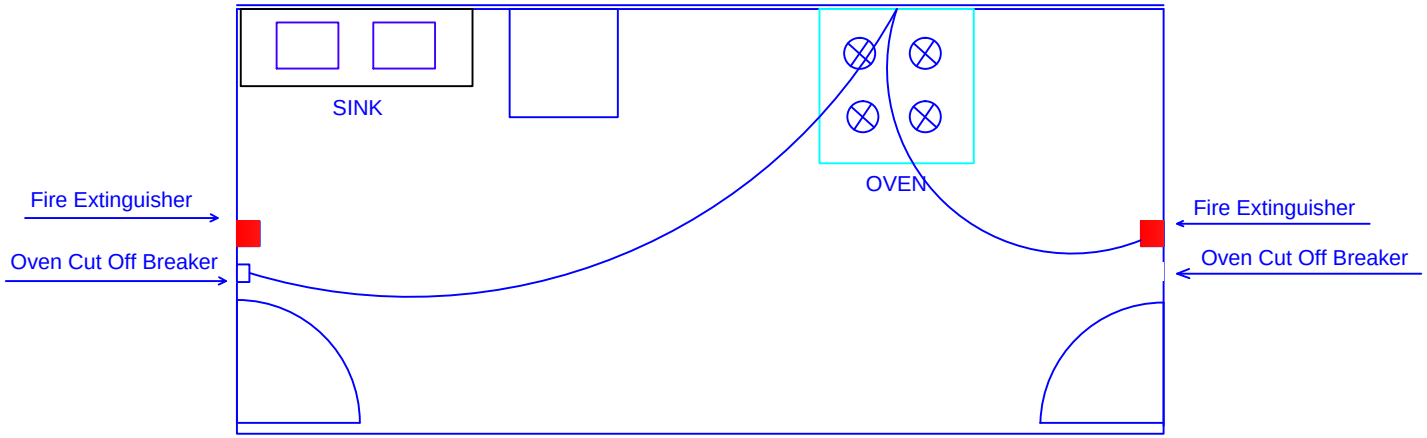
SINK
OVEN
Fire Extinguisher
Oven Cut Off Breaker
Fire Extinguisher
Oven Cut Off Breaker

3

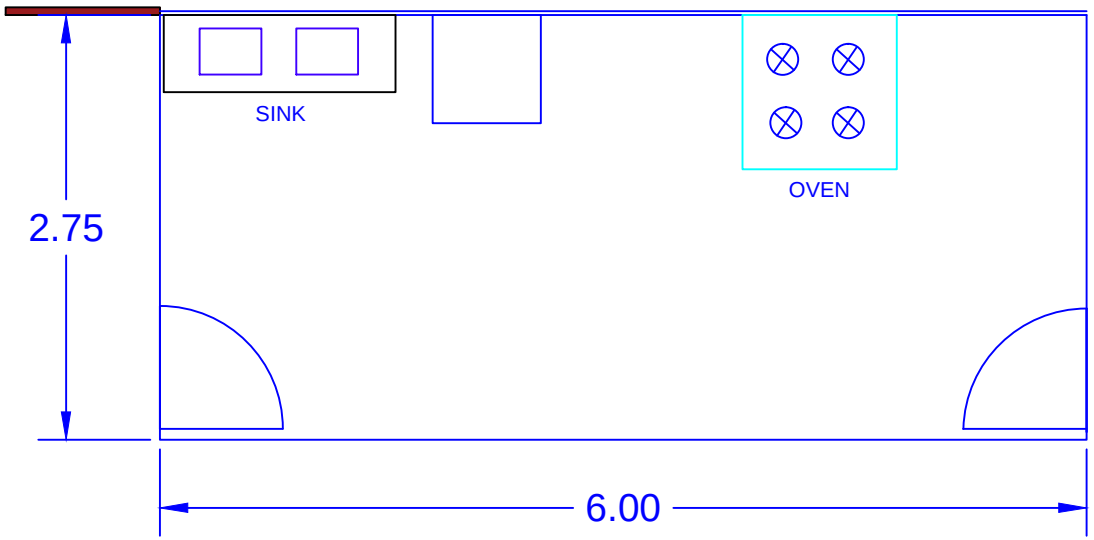

4

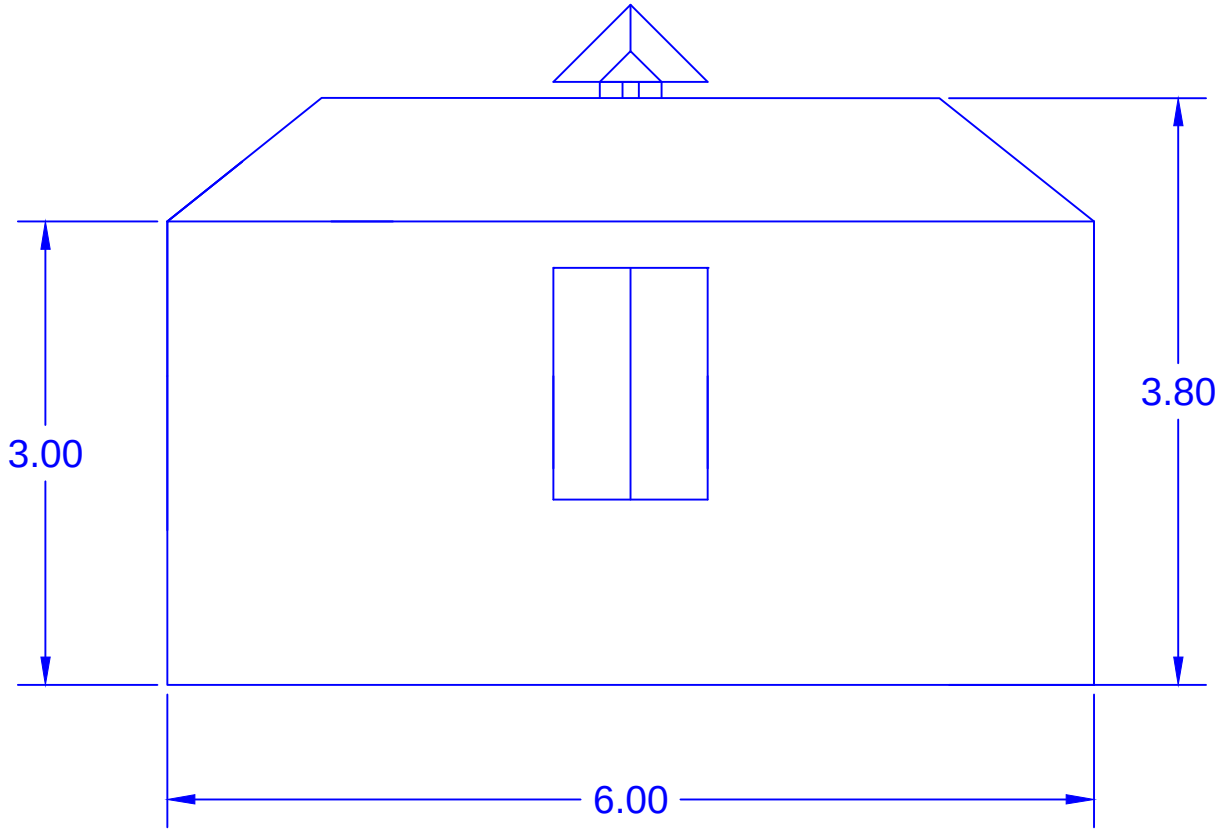

5

Side View

Front view

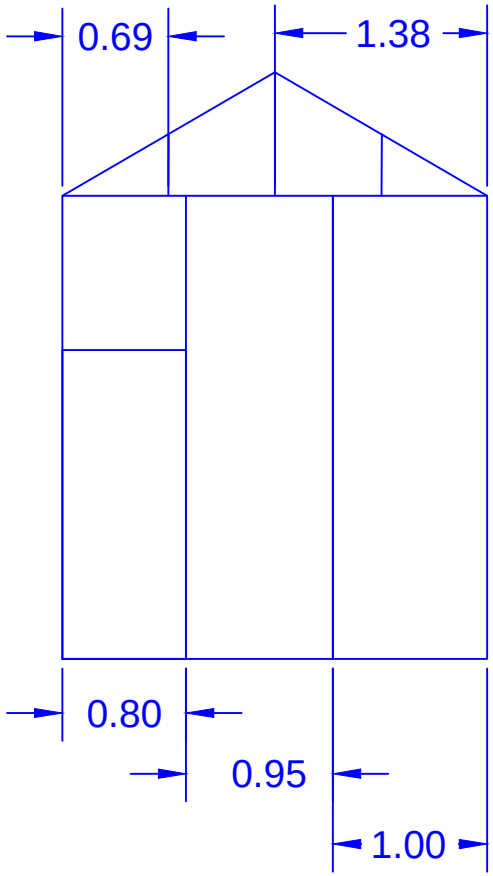

6

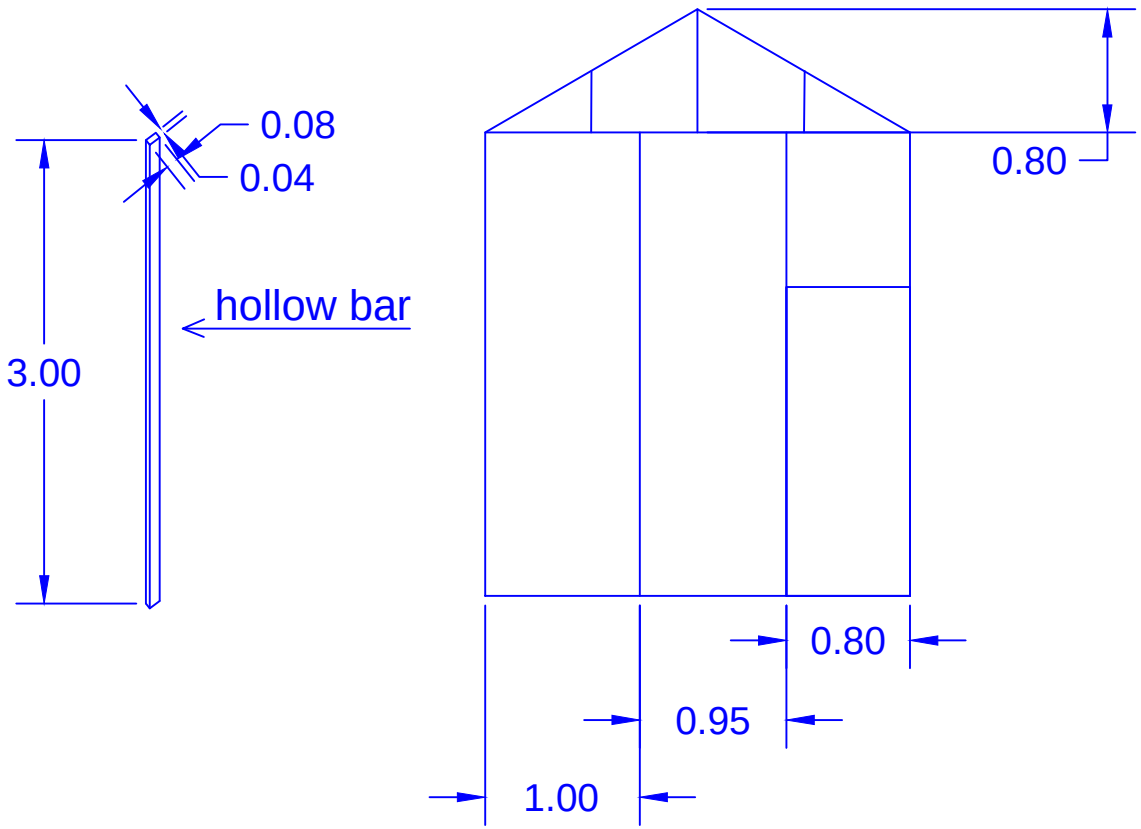

7

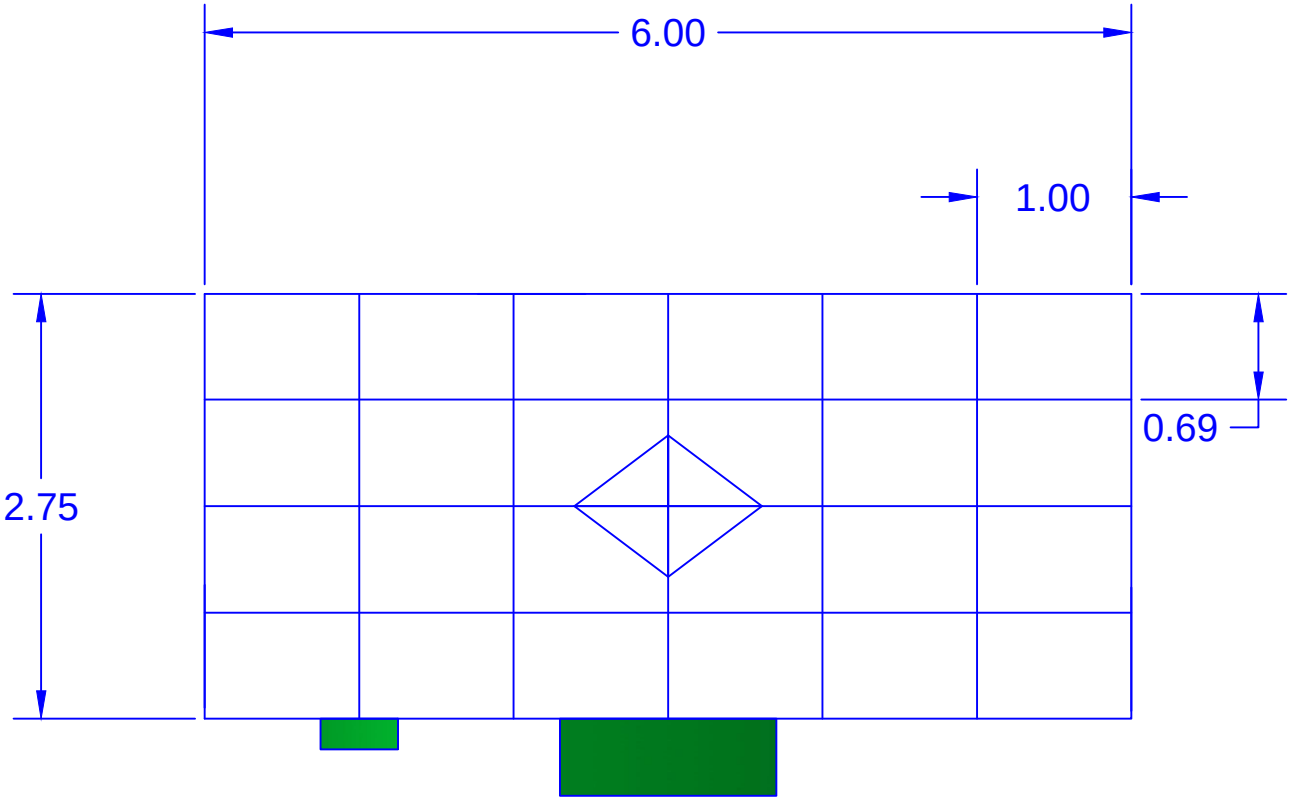

Top View

8

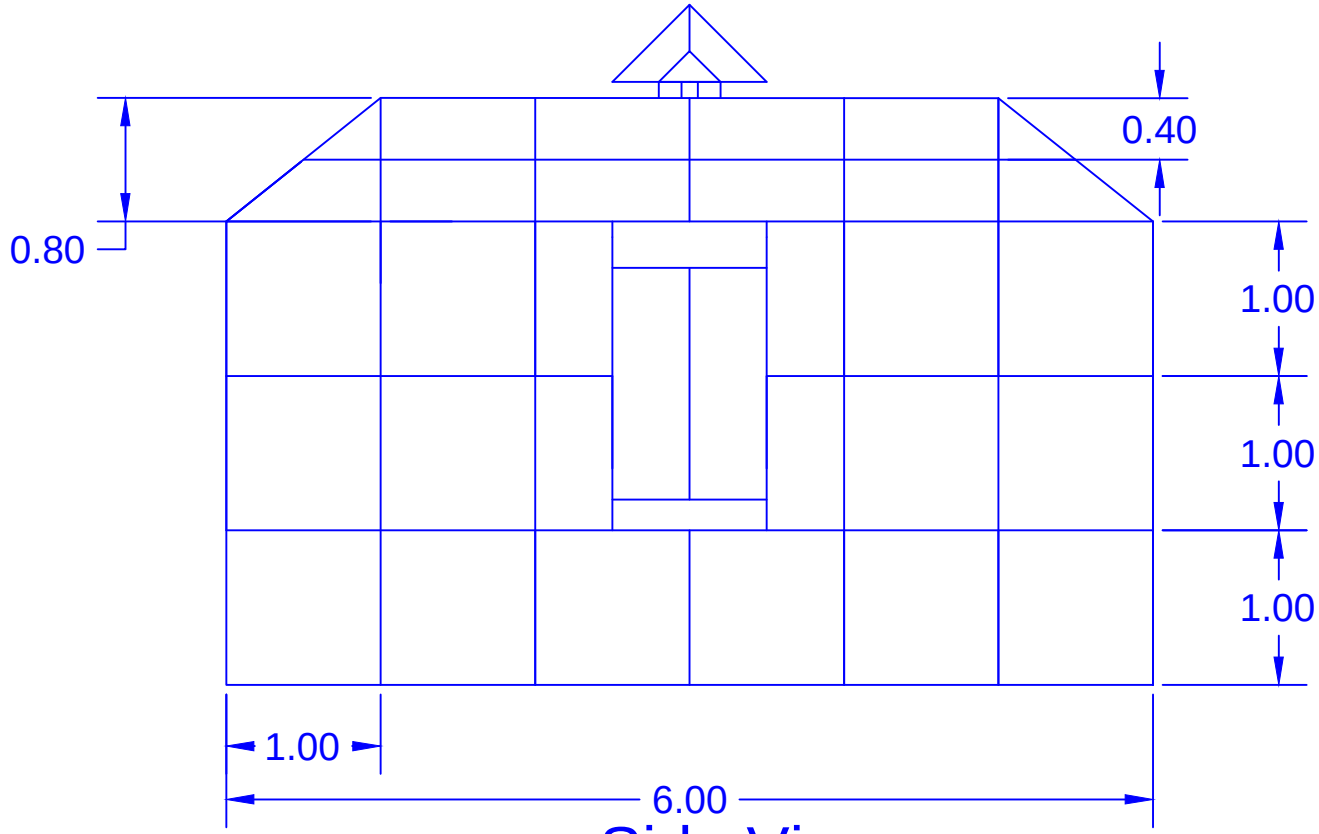

Side View

9

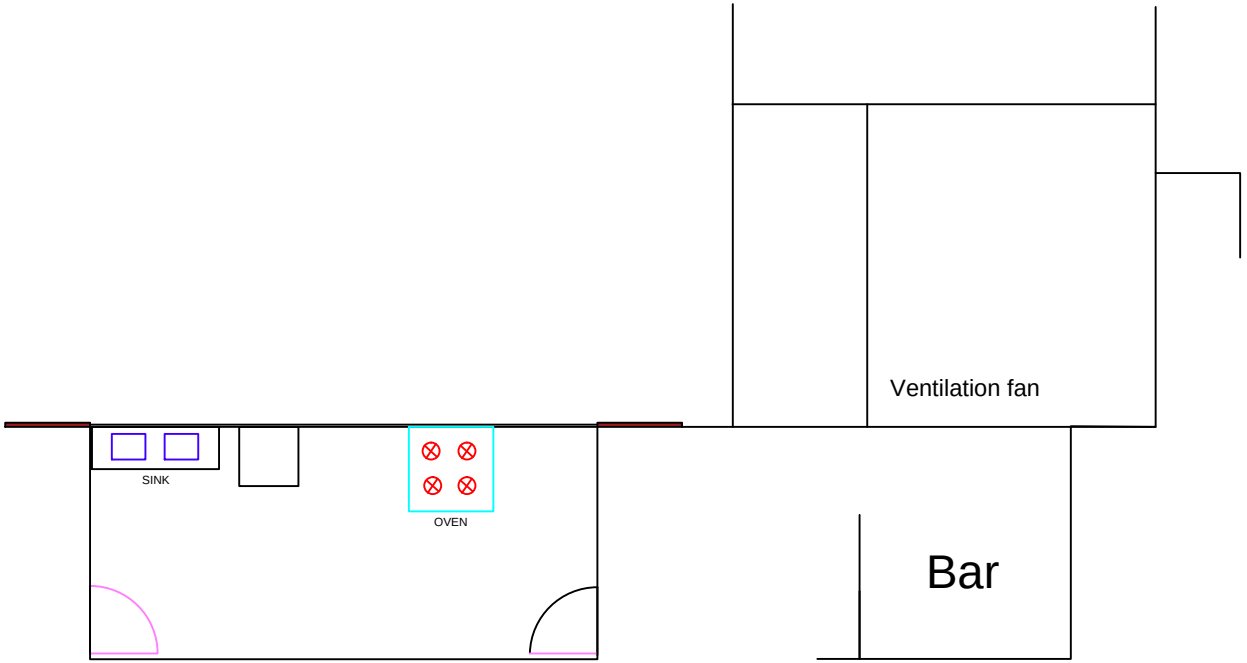

Swimming pool