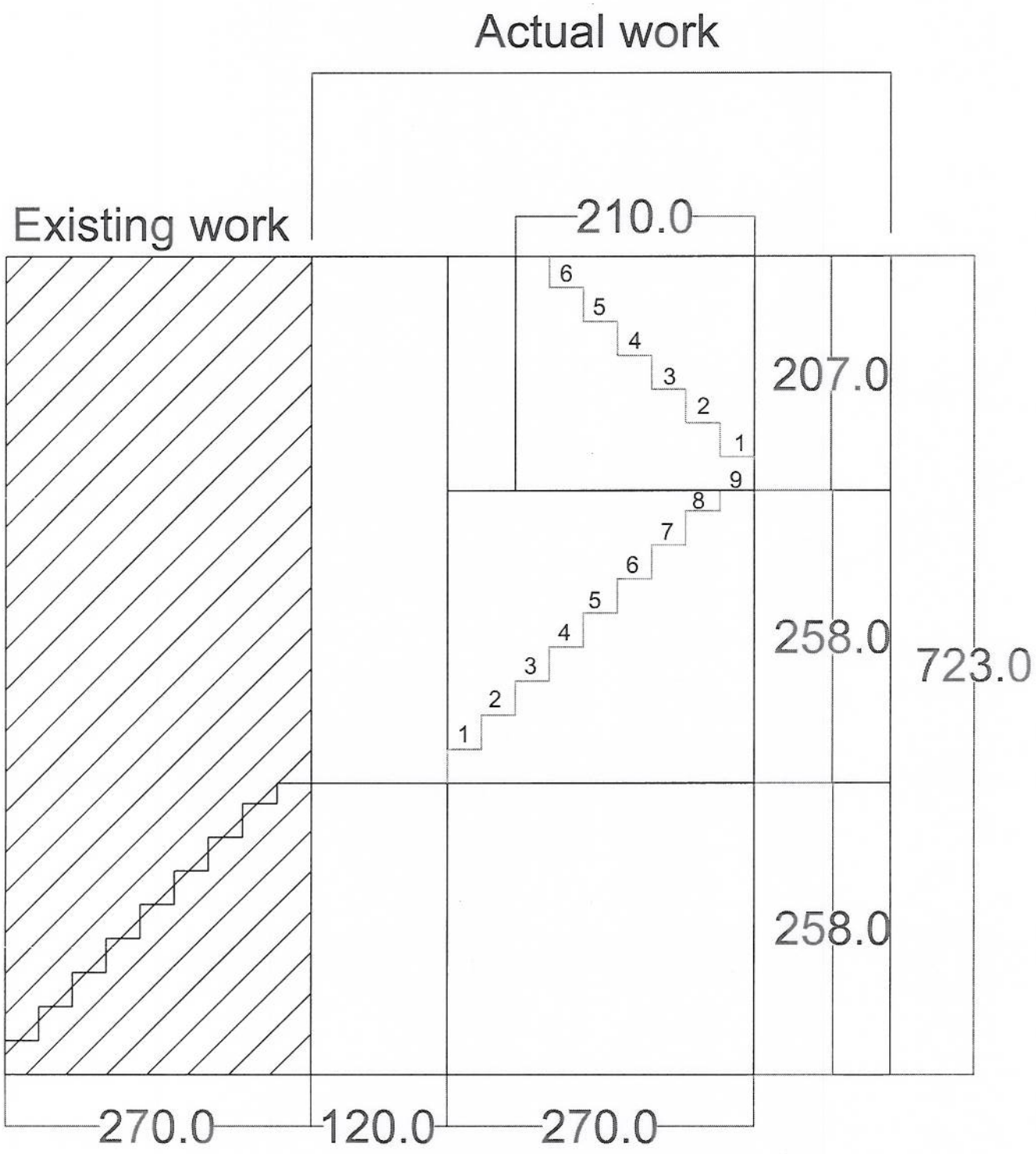


All diminutions are in the cm

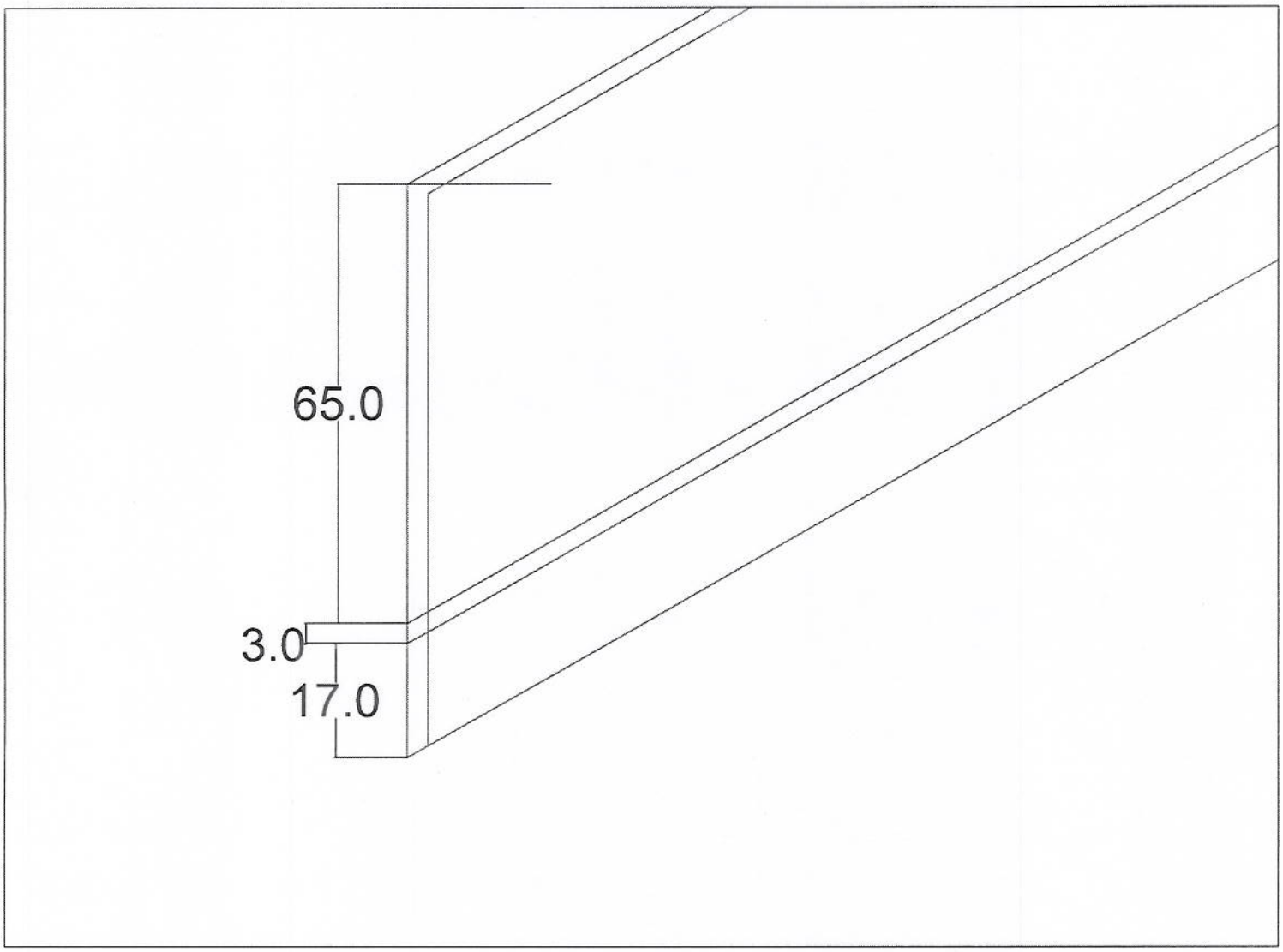
65.0
3.0
17.0

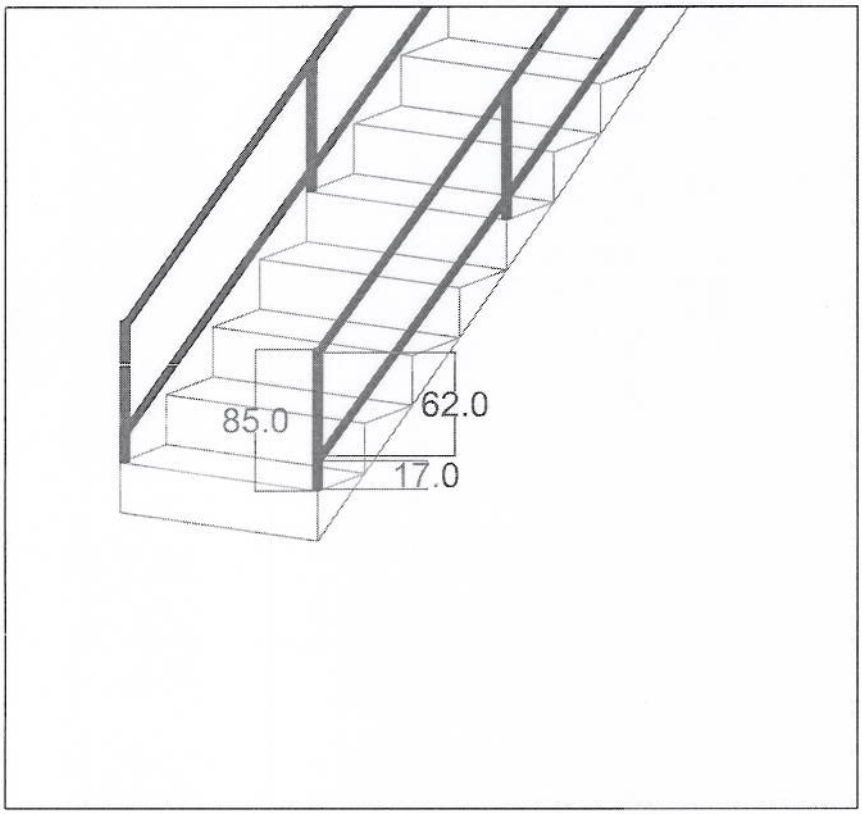
85.0
62.0
17.0

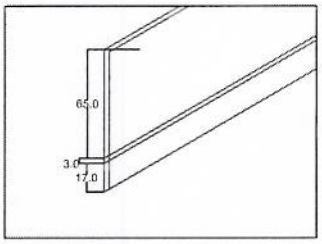
65.0
3.0
17.0

# On the roof

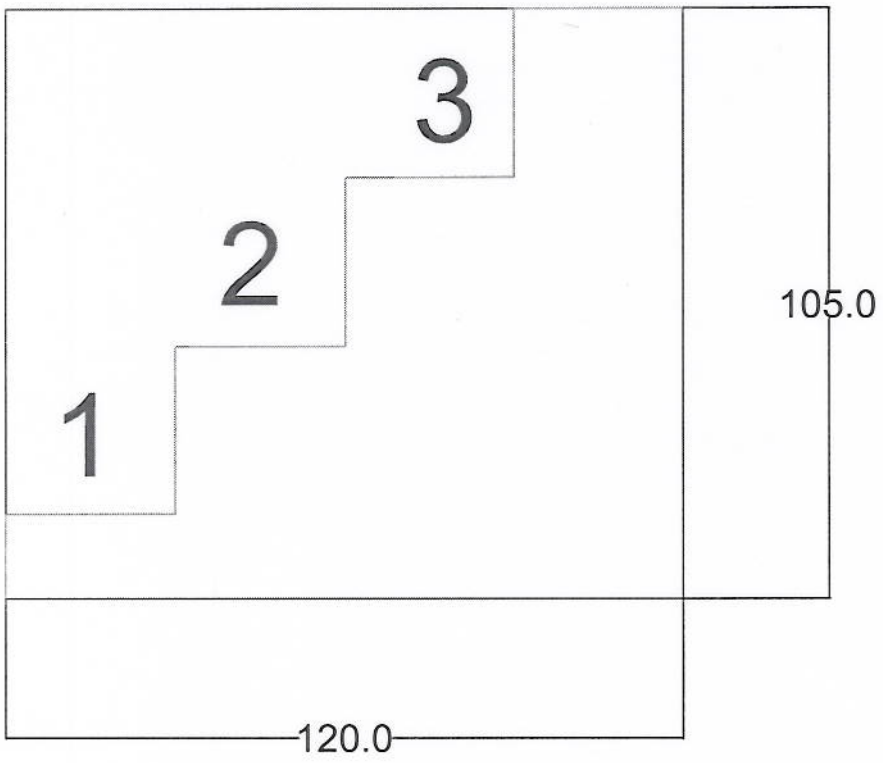

# Step

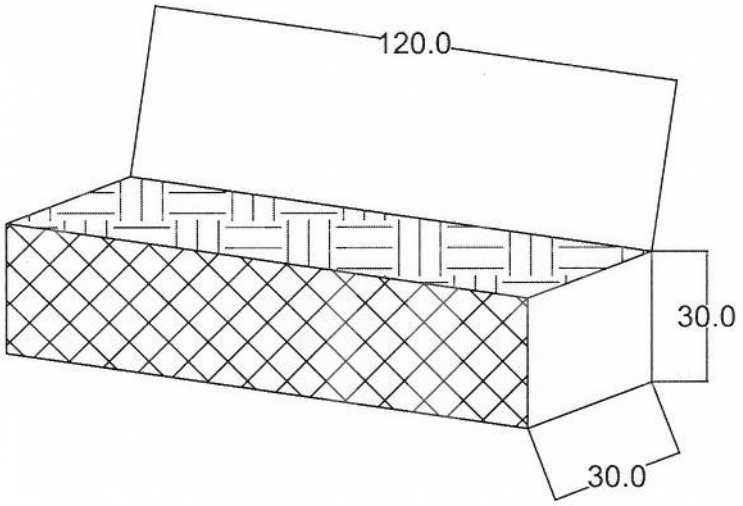

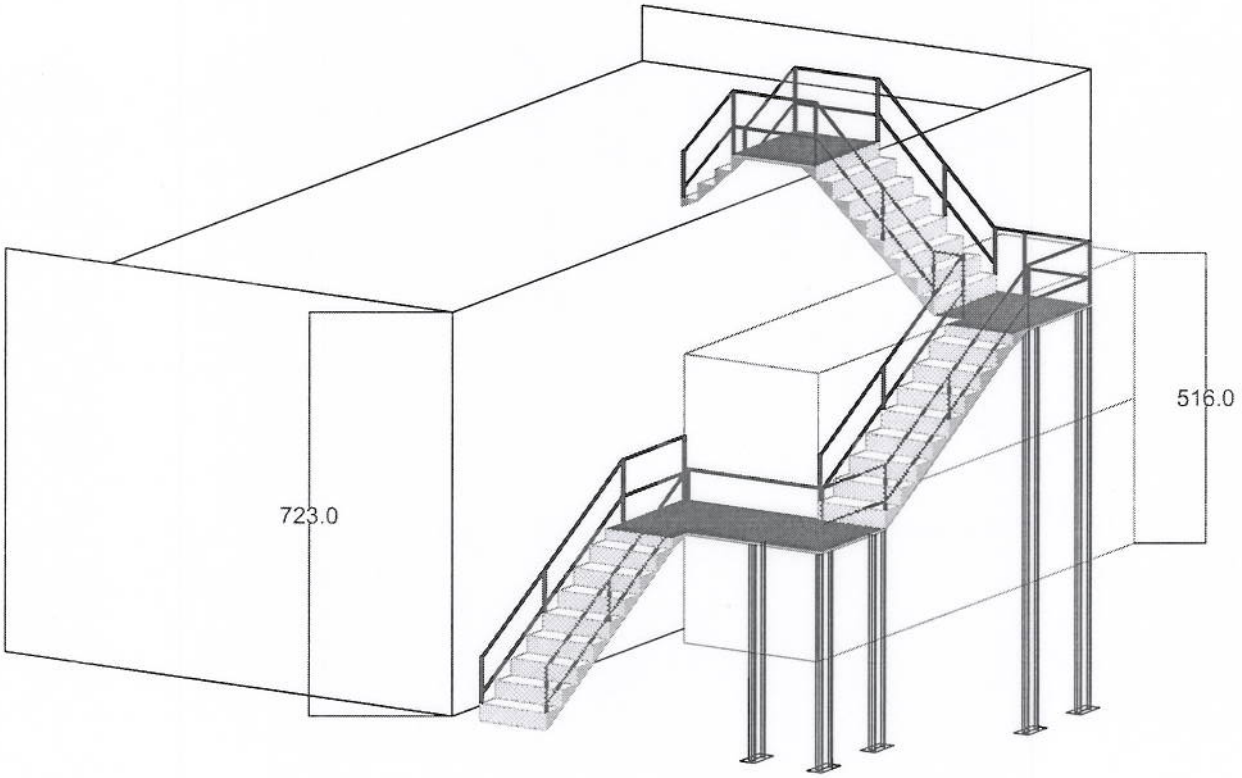
723.0
516.0