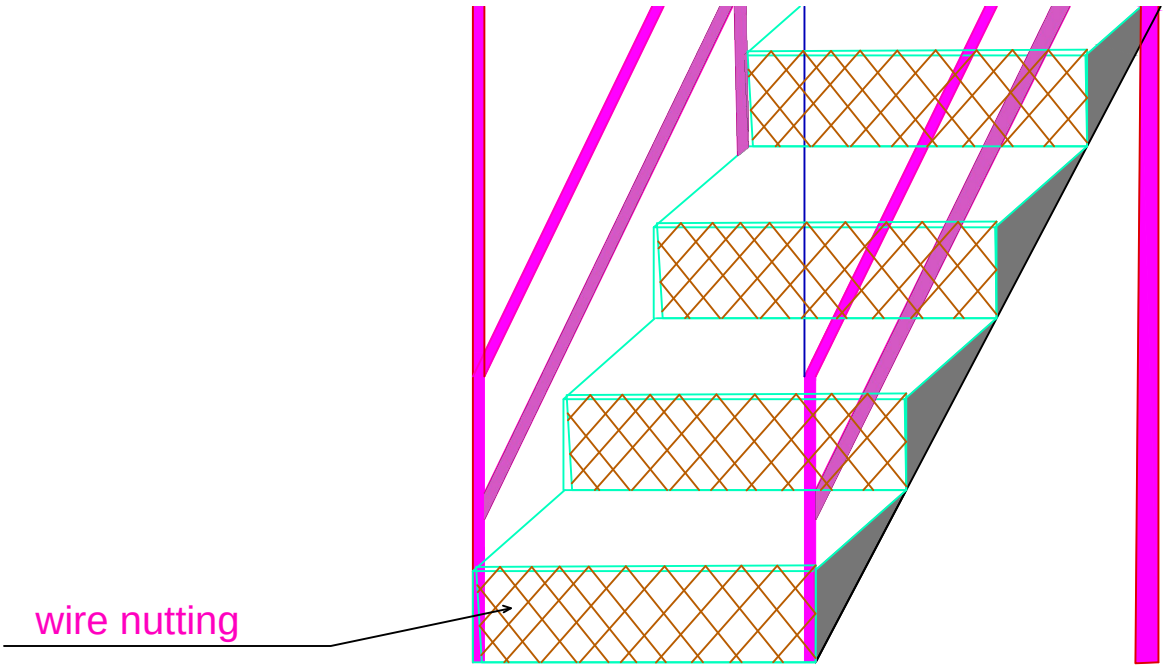
wire nutting

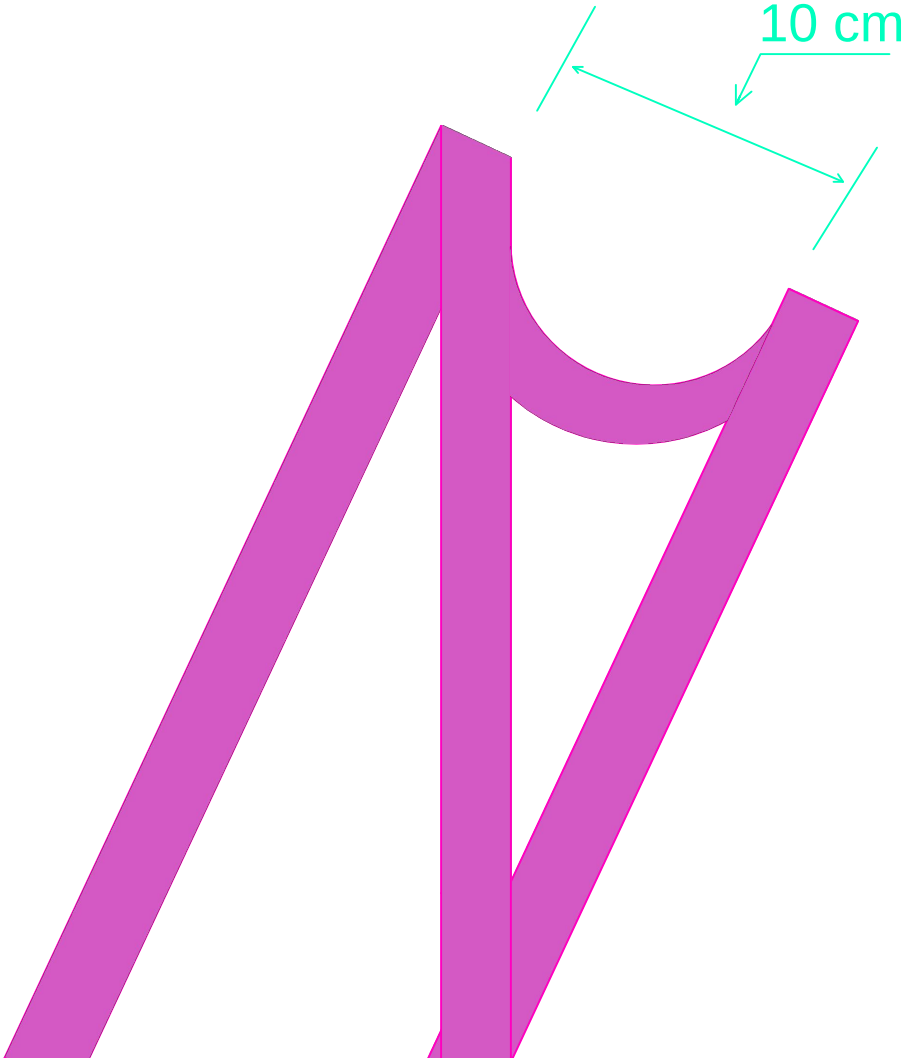
10 cm

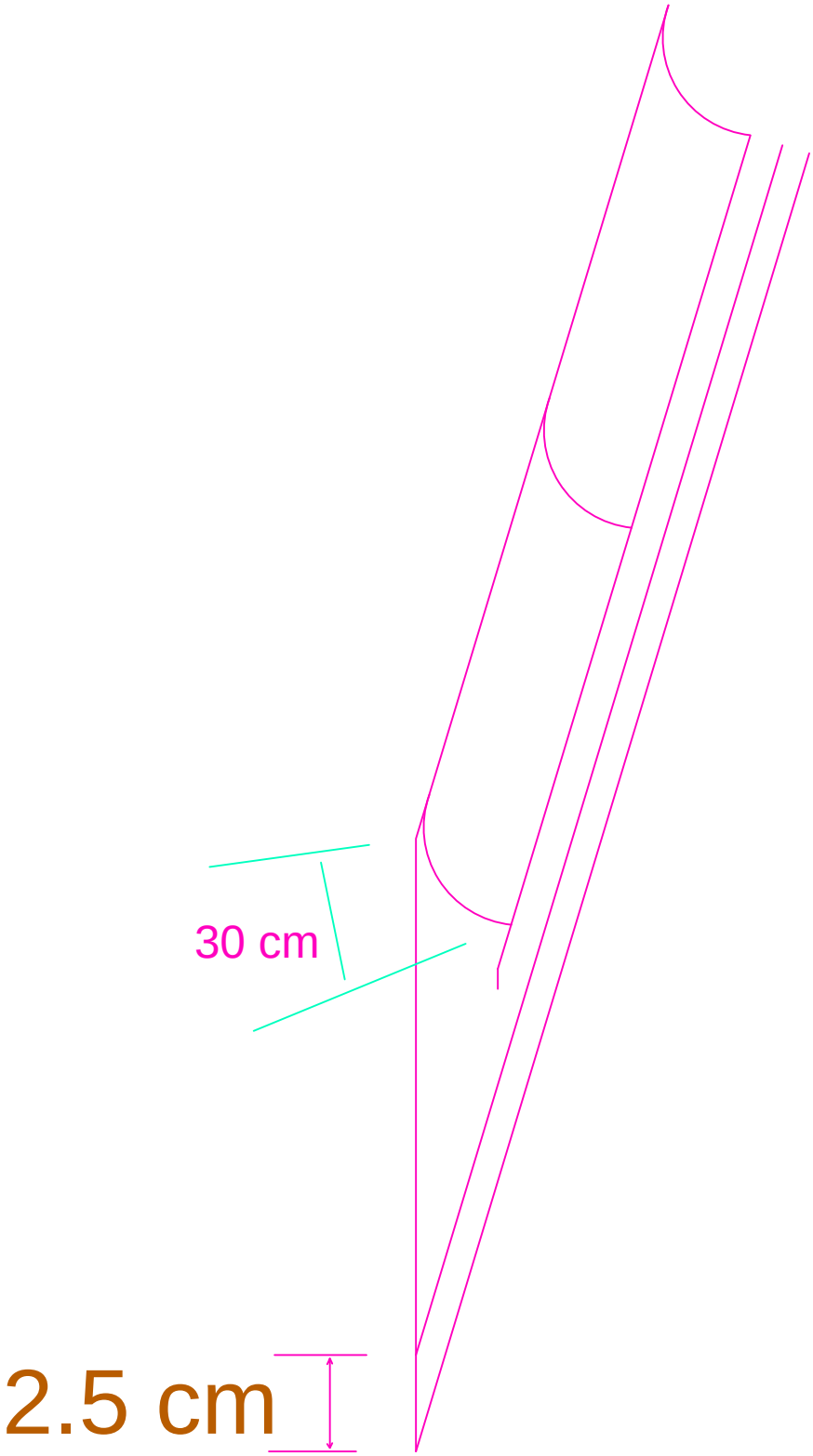
30 cm
2.5 cm

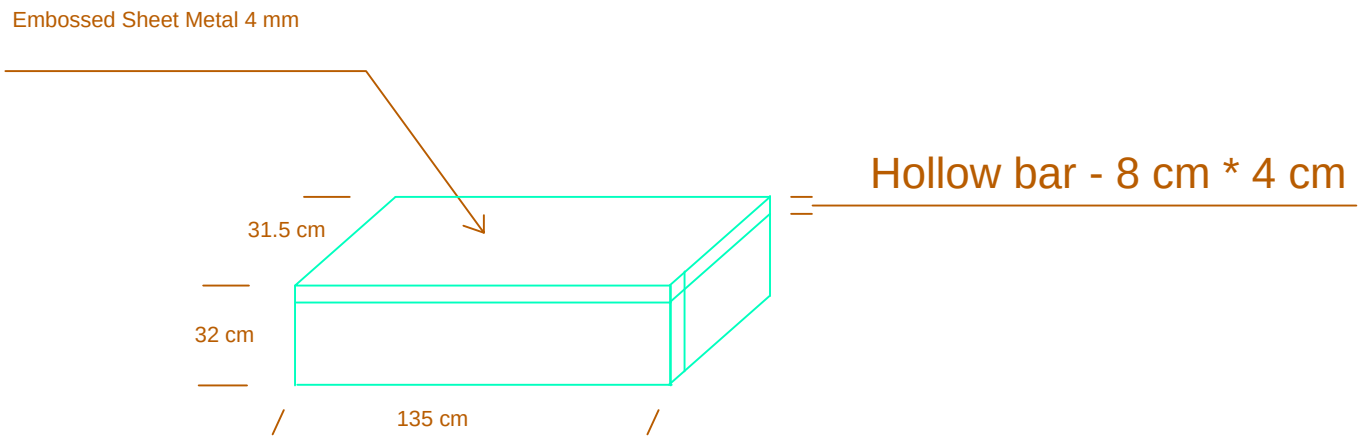
Embossed Sheet Metal 4 mm
Hollow bar - 8 cm * 4 cm
31.5 cm
32 cm
135 cm

Hollow bar - 8 cm * 4 cm

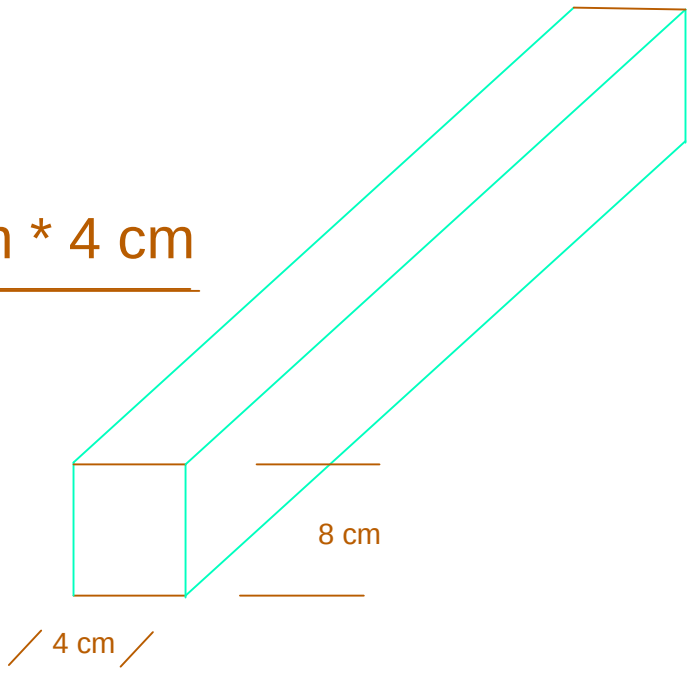

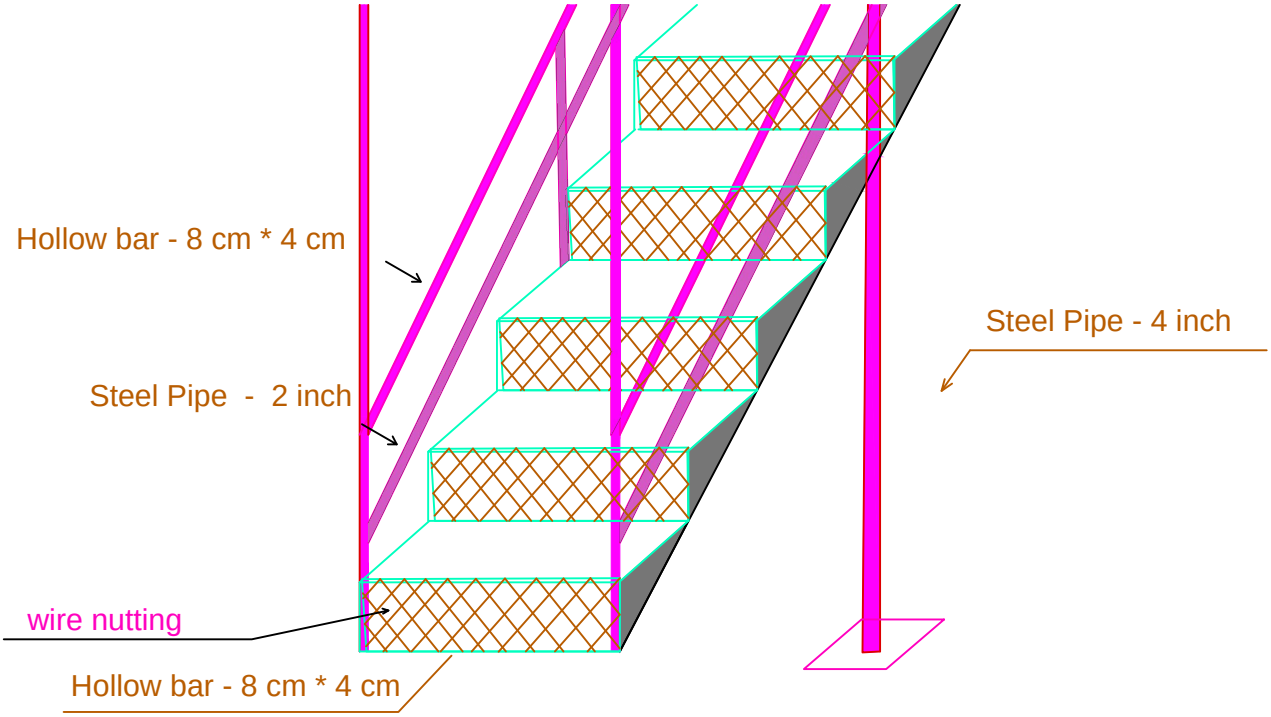
Hollow bar - 8 cm * 4 cm
Steel Pipe - 4 inch
Steel Pipe - 2 inch
wire nutting
Hollow bar - 8 cm * 4 cm

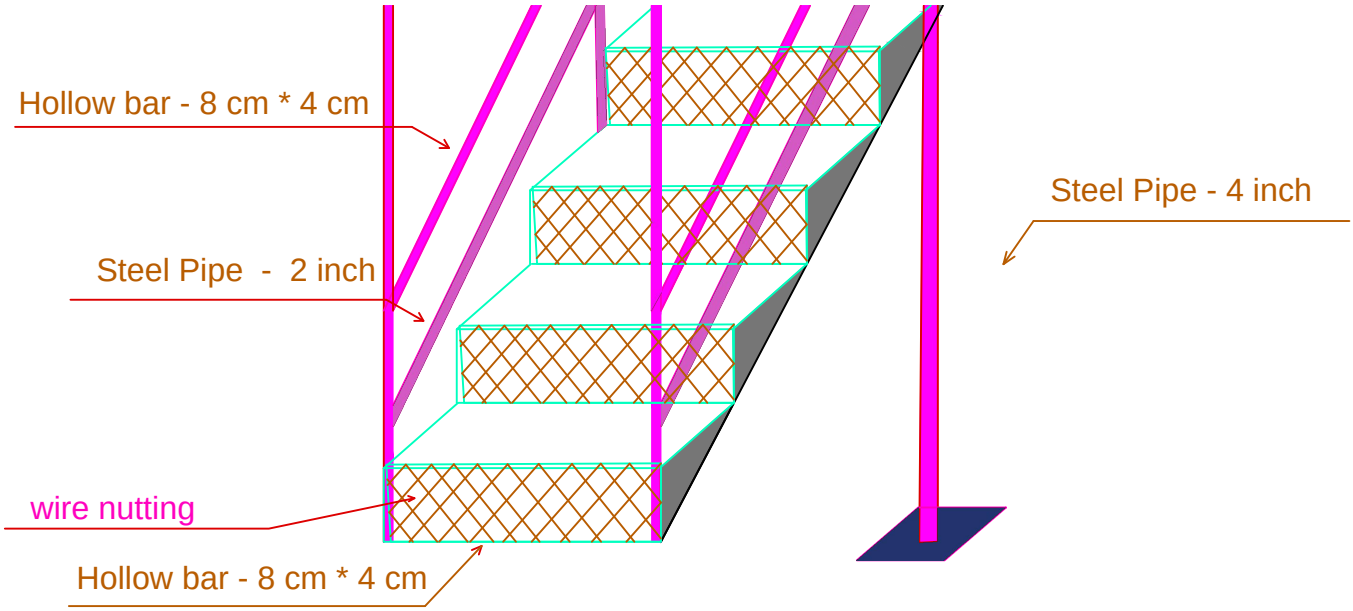
Hollow bar - 8 cm * 4 cm
Steel Pipe - 4 inch
Steel Pipe - 2 inch
wire nutting
Hollow bar - 8 cm * 4 cm

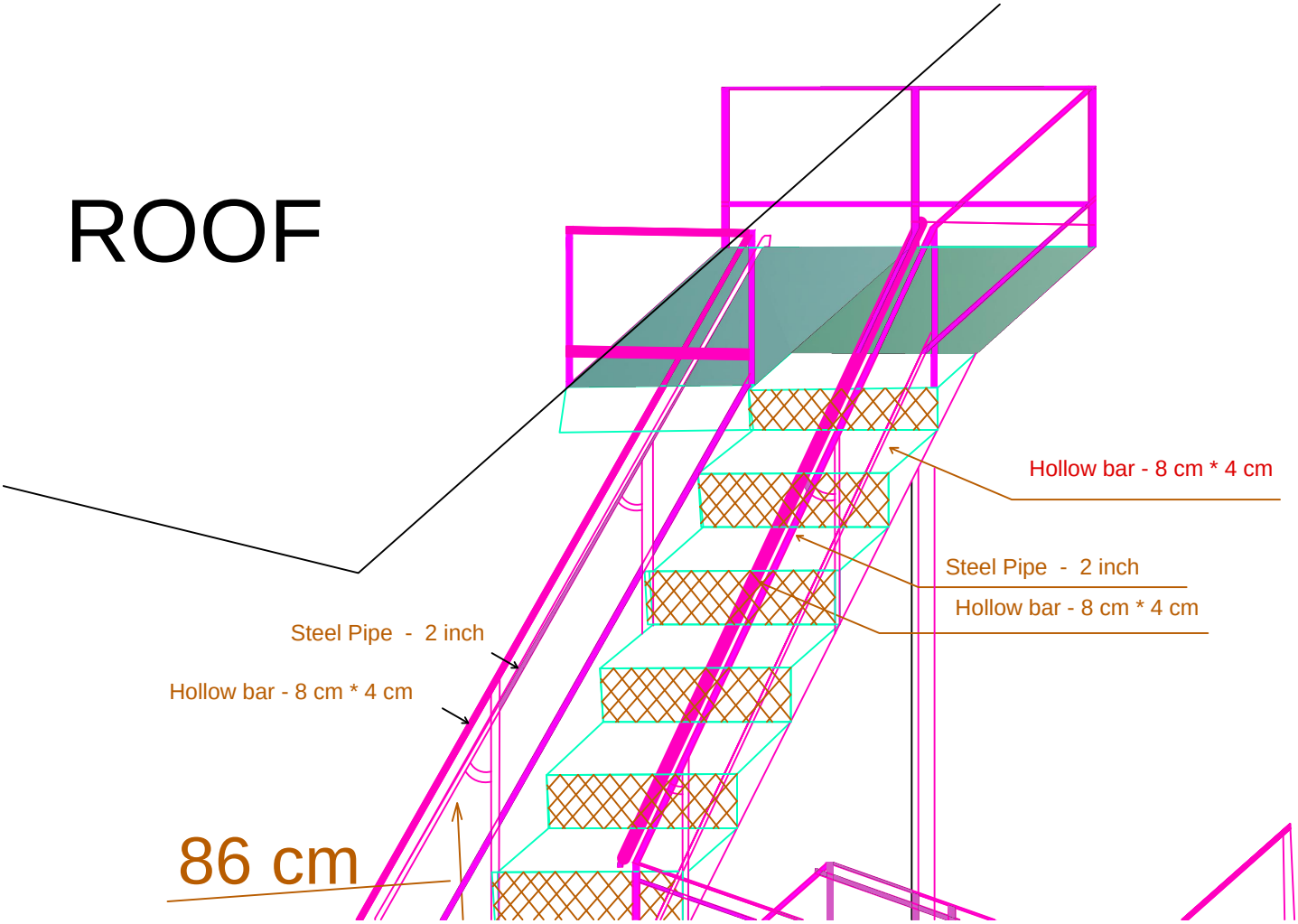
ROOF
Hollow bar - 8 cm * 4 cm
Steel Pipe - 2 inch
Hollow bar - 8 cm * 4 cm
Steel Pipe - 2 inch
Hollow bar - 8 cm * 4 cm
86 cm

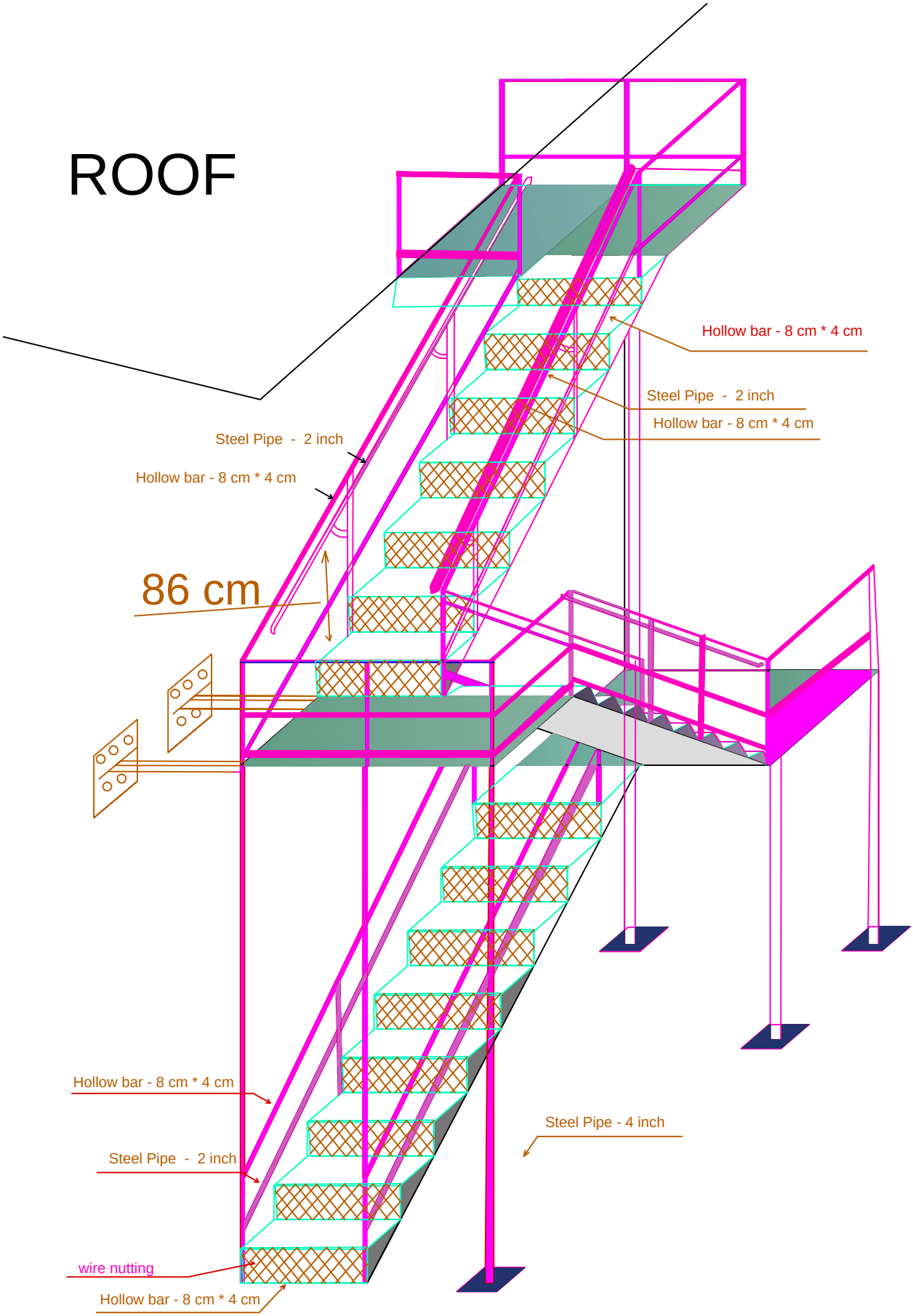
ROOF
Hollow bar - 8 cm * 4 cm
Steel Pipe - 2 inch
Hollow bar - 8 cm * 4 cm
Steel Pipe - 2 inch
Hollow bar - 8 cm * 4 cm
86 cm
Hollow bar - 8 cm * 4 cm
Steel Pipe - 4 inch
Steel Pipe - 2 inch
wire nutting
Hollow bar - 8 cm * 4 cm

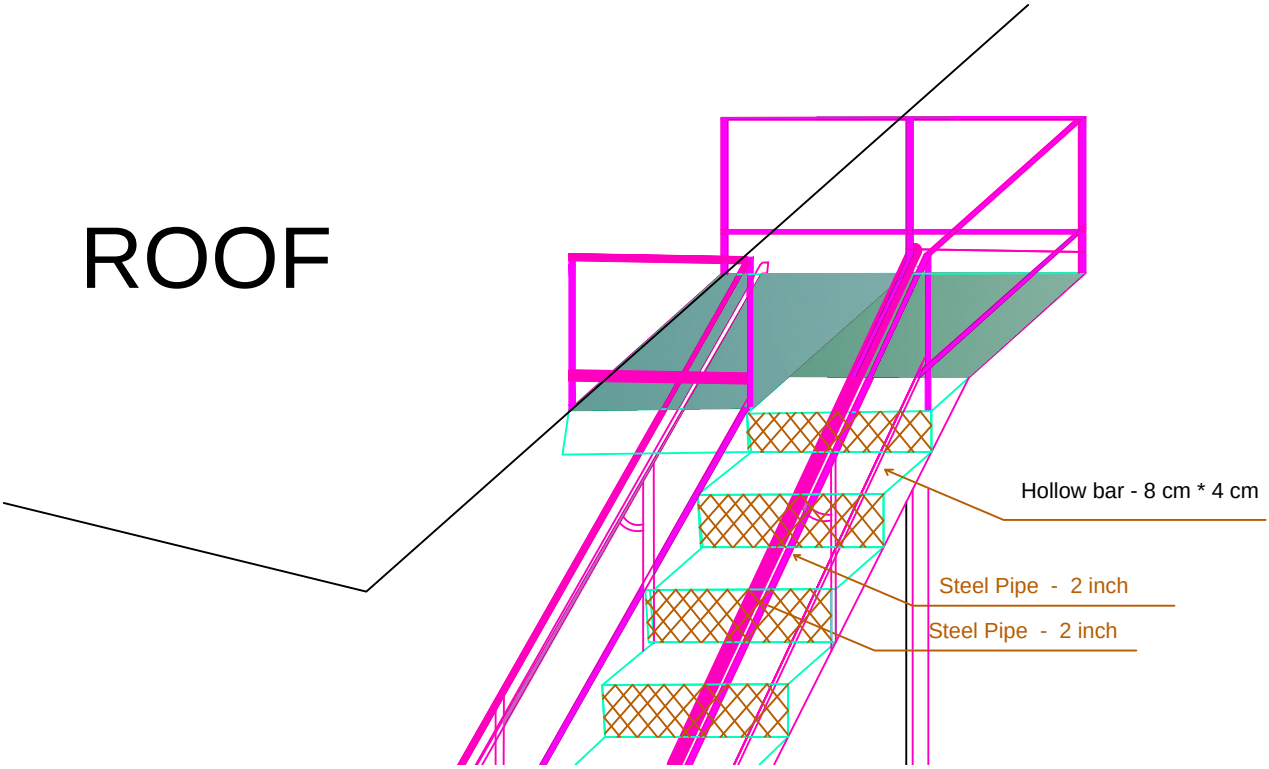
ROOF
Hollow bar - 8 cm * 4 cm
Steel Pipe - 2 inch
Steel Pipe - 2 inch

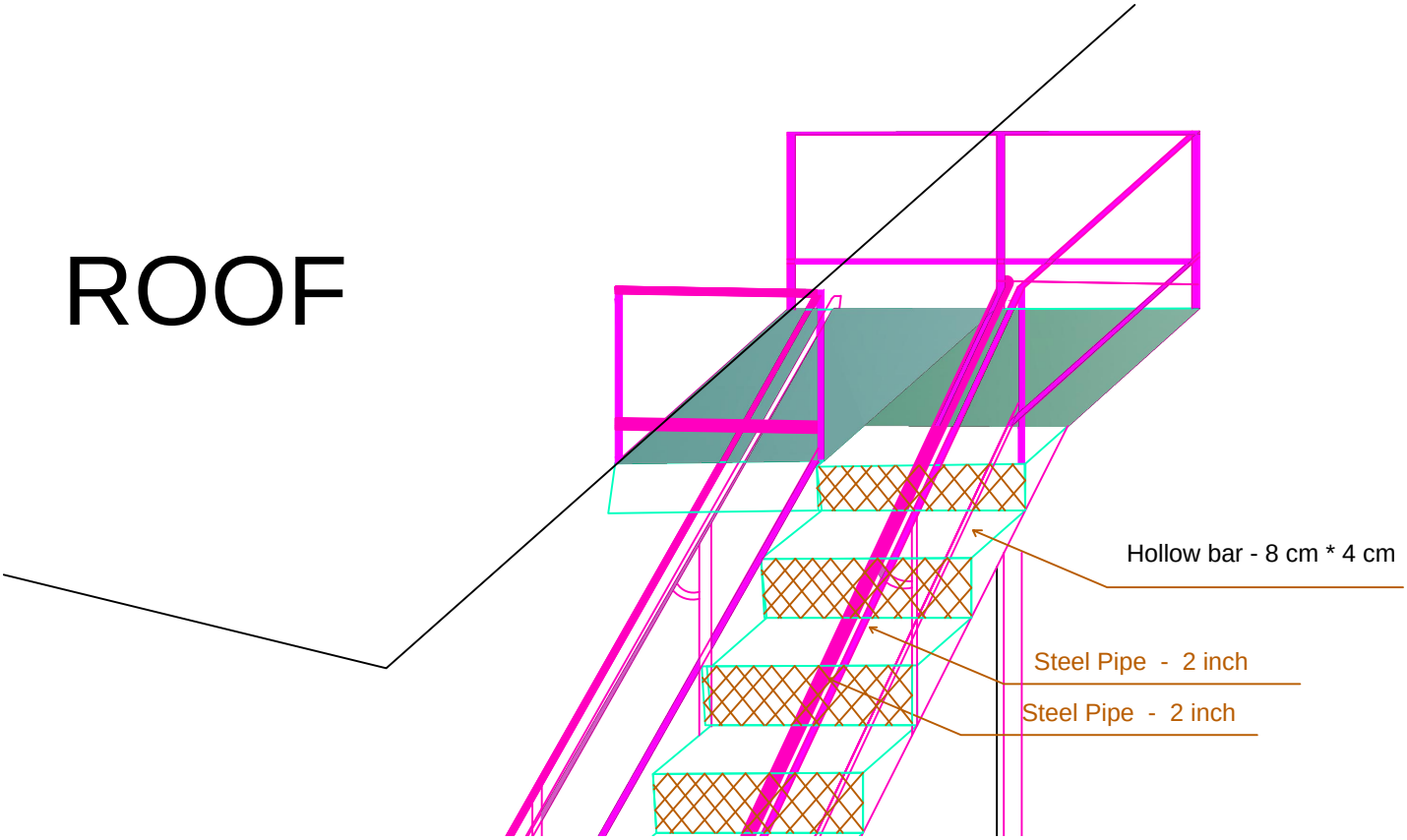
ROOF
Hollow bar - 8 cm * 4 cm
Steel Pipe - 2 inch
Steel Pipe - 2 inch

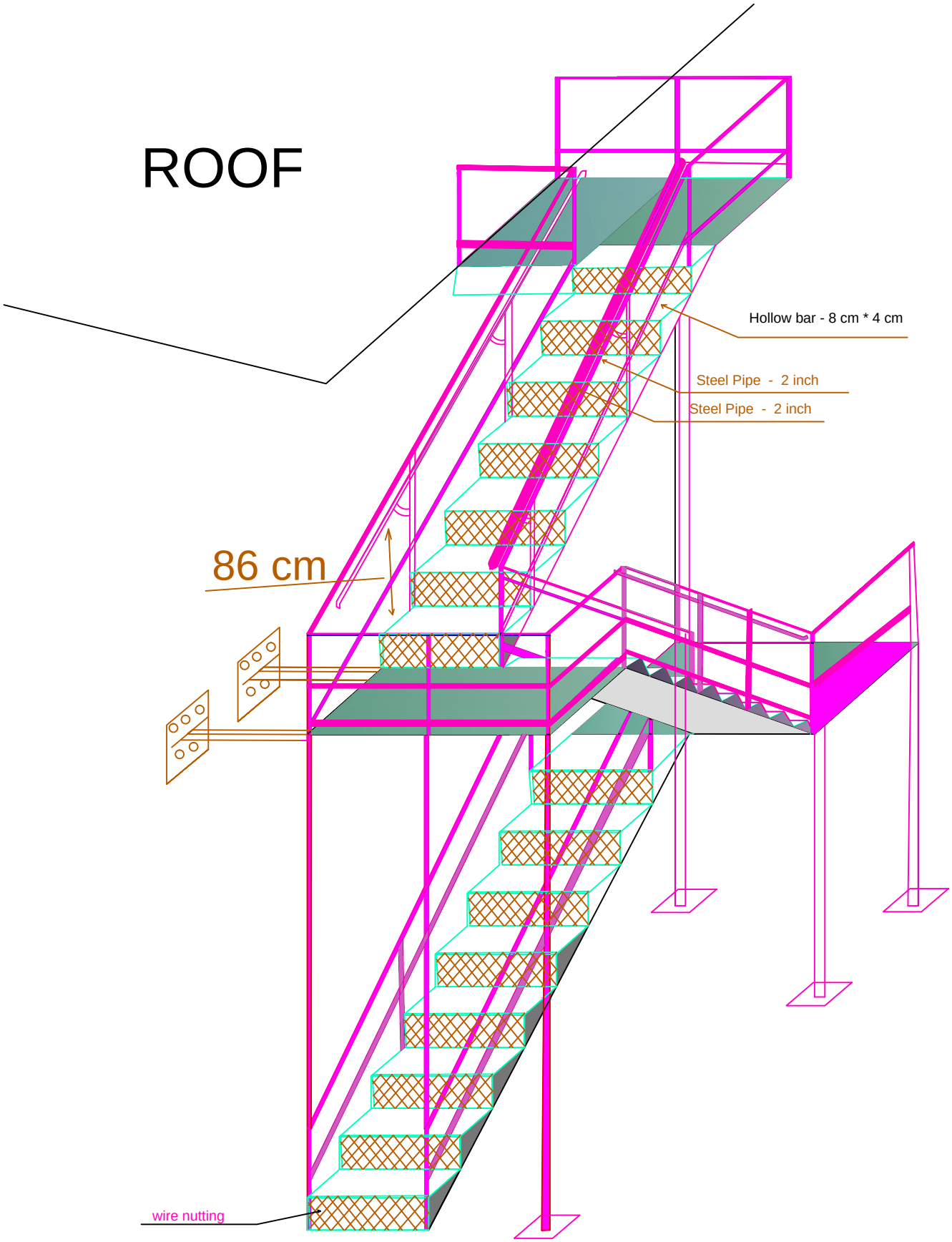
ROOF
Hollow bar - 8 cm * 4 cm
Steel Pipe - 2 inch
Steel Pipe - 2 inch
86 cm
wire nutting

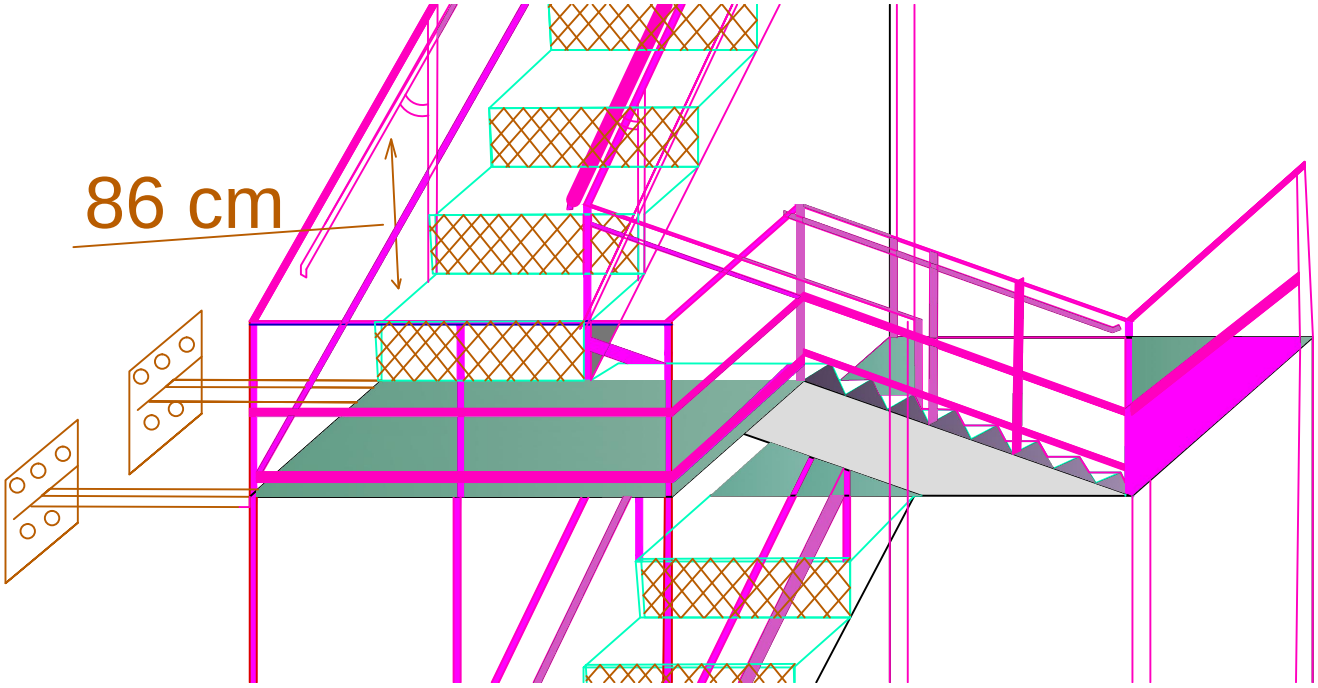
86 cm

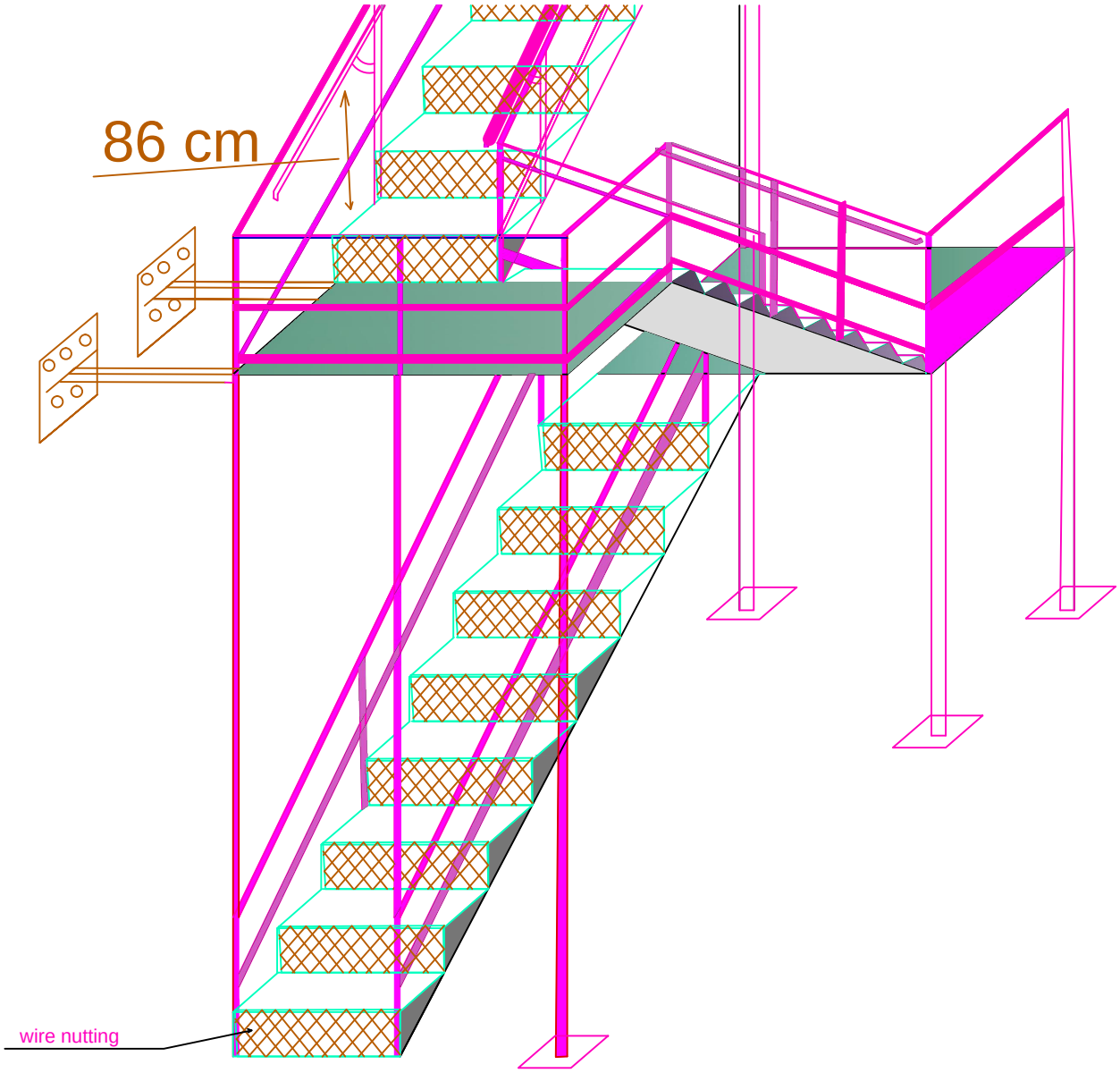
86 cm
wire nutting

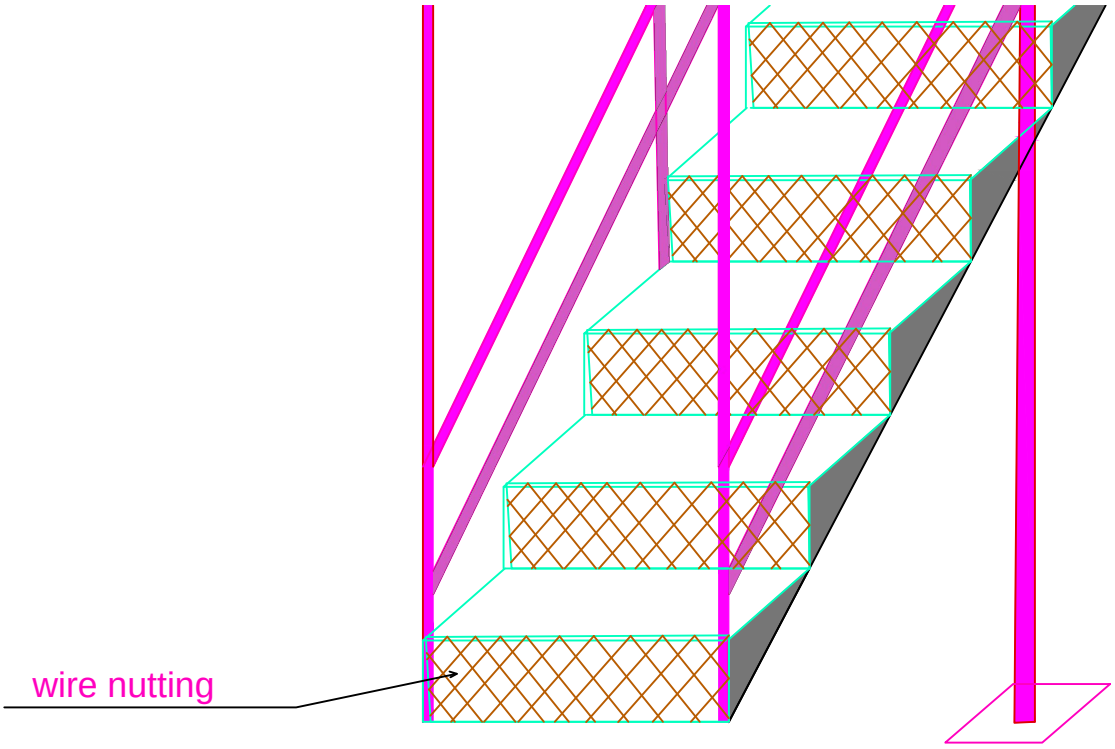
wire nutting

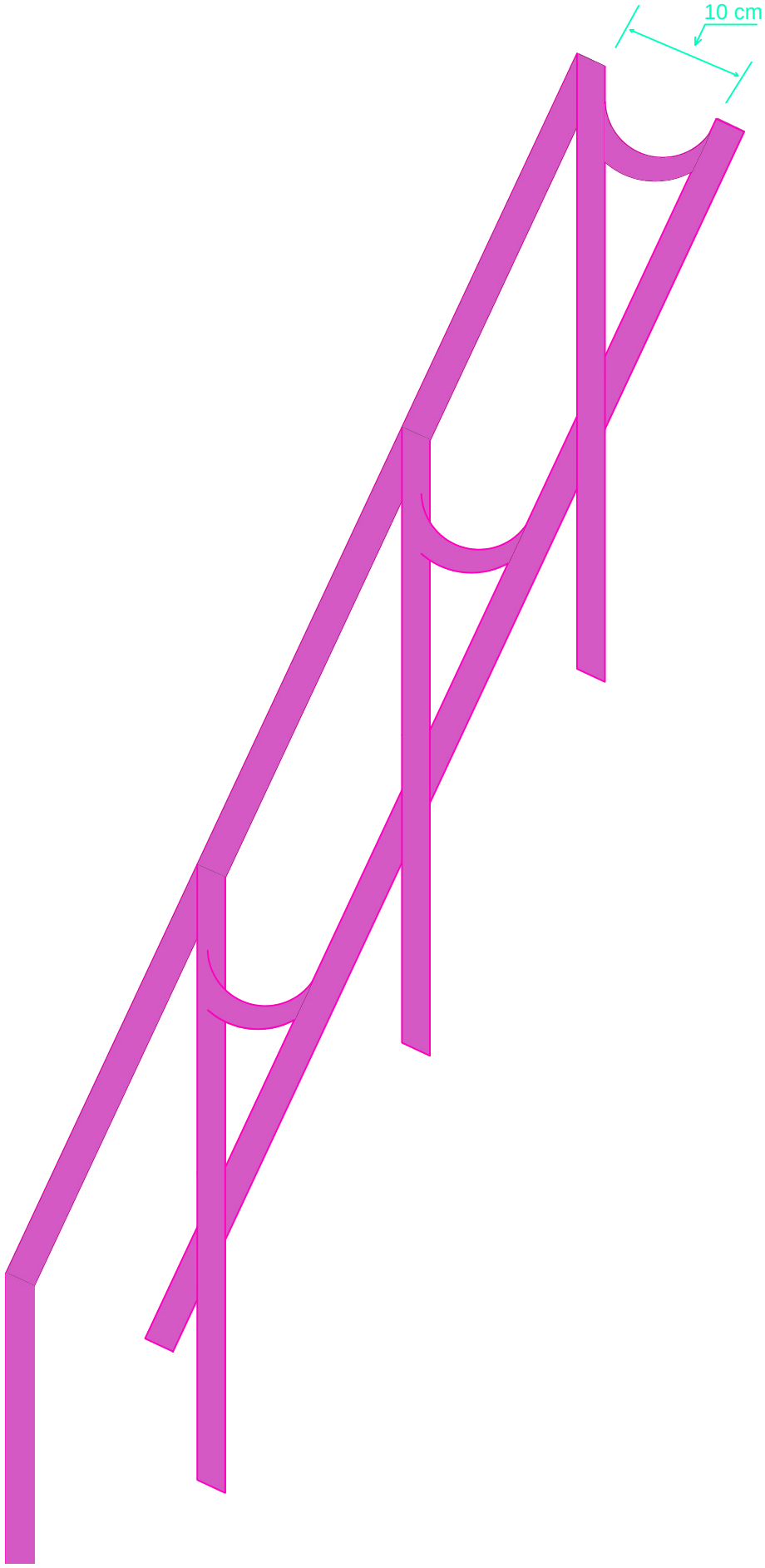
10 cm

Marines Stairs	
Steel pipe	2 inch
Steel pipe	4 inch
Hollow metal bar	8 * 4 cm
Embossed Metal plate	4 mm
Wire netting	